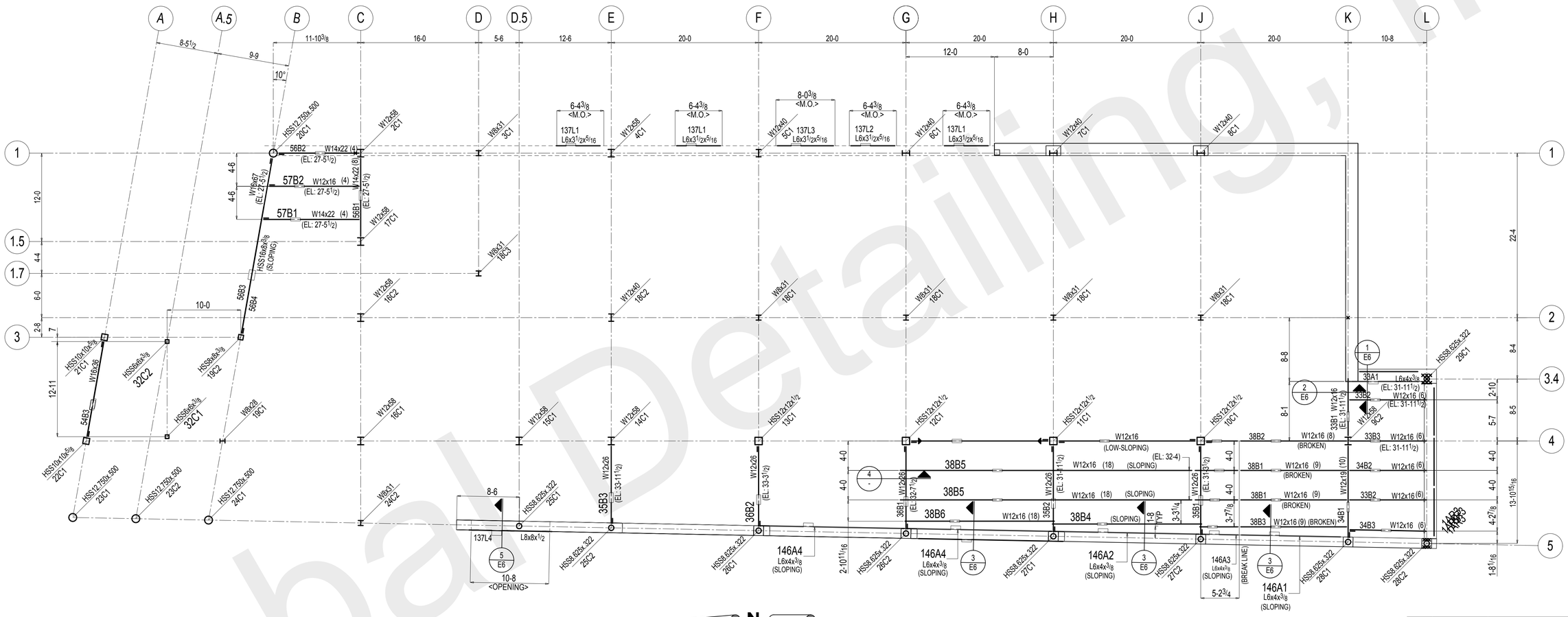

N

LOW STEEL FRAMING PLAN

1) TOP OF SLAB EL: 32-8
2) TOP OF STEEL EL: 32-1 1/2 (-6 1/2" UNO)

FIELD NOTES:

1) THE SNUG-TIGHT CONDITION IS DEFINED AS THE TIGHTNESS REQUIRED TO BRING THE CONNECTED PLIES INTO FIRM CONTACT. BOLTS TO BE TIGHTENED TO A CONDITION OTHER THAN SNUG-TIGHT SHALL BE CLEARLY IDENTIFIED ON THE DEISGN DRAWINGS.

2) CONNECTIONS MARKED WITH (▶—) REQUIRE FULL SLIP CRITICAL CONNECTIONS AND THIS IS DONE BY THE AISC: TURN OF THE NUT METHOD

*MATERIAL: A36 UNLESS NOTED OTHERWISE

*HOLES: 13/16 Dia U.N.O.

*WELDING: E70XX OR E7XT-X ALL WELDING MUST BE DONE IN ACCORDANCE WITH A.W.S. D1.1

*BOLTS: 3/4" Dia A325N U.N.O.

*PAINT: NO PAINT

*SURFACE PREPARATION: SSPC-SP3

REV	DATE	DESCRIPTION	BY
1	Oct 8 2014	FLD USE	TDB
A	Aug 27 2014	APPROVAL	

REVISIONS

ALFRED UNIVERSITY MUSEUM OF CERAMIC ART
ALFRED, NY

DRAWN BY TDB	FRAMING PLAN - LO	JOB# 14-68
CHK'D. BY -		SHEET# E1
DATE -	REYNOLDS IRON WORKS, INC.	
SCALE	157 PALMER INDUSTRIAL ROAD WILLIAMSPORT, PA 17701	

Global Detailing, Inc

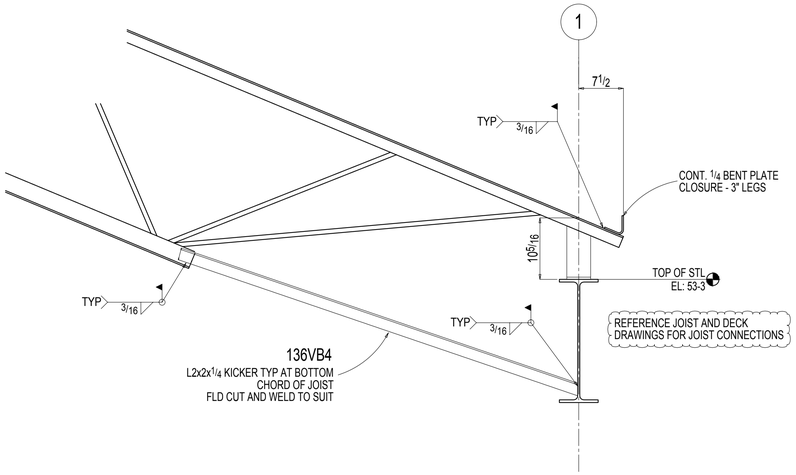

1 - SECTION
REF: S-5

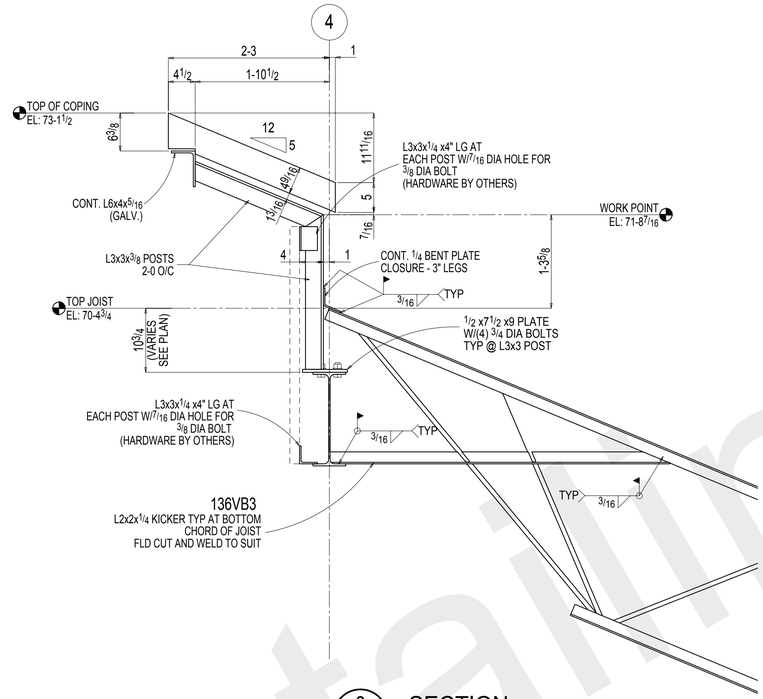

2 - SECTION
REF: S-5

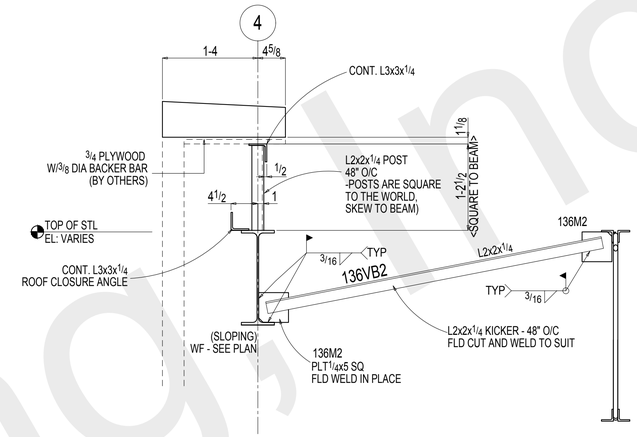

3 - SECTION
REF: S-5

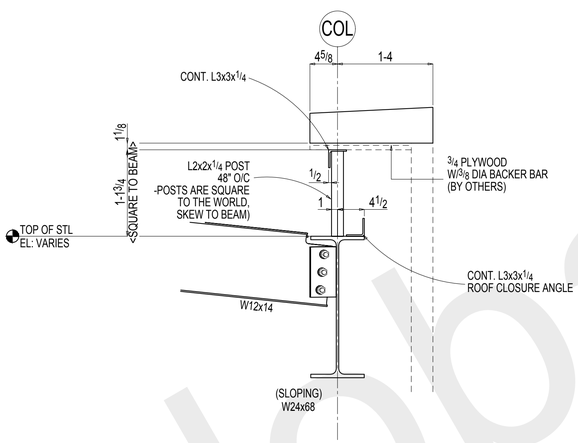

4 - SECTION
REF: S-5

FIELD NOTES:

1) THE SNUG-TIGHT CONDITION IS DEFINED AS THE TIGHTNESS REQUIRED TO BRING THE CONNECTED PLIES INTO FIRM CONTACT. BOLTS TO BE TIGHTENED TO A CONDITION OTHER THAN SNUG-TIGHT SHALL BE CLEARLY IDENTIFIED ON THE DEISGN DRAWINGS.

2) CONNECTIONS MARKED WITH (▶—) REQUIRE FULL SLIP CRITICAL CONNECTIONS AND THIS IS DONE BY THE AISC: TURN OF THE NUT METHOD

*MATERIAL: A36 UNLESS NOTED OTHERWISE

*HOLES: 13/16 Dia U.N.O.

*WELDING: E70XX OR E7XT-X ALL WELDING MUST BE DONE IN ACCORDANCE WITH A.W.S. D1.1

*BOLTS: 3/4" Dia A325N U.N.O.

*PAINT: SEE DETAILS

*SURFACE PREPARATION: SSPC-SP3

REV	DATE	DESCRIPTION	BY
1	Oct 8 2014	FLD USE	TDB
A	Aug 27 2014	APPROVAL	TDB

REVISIONS

ALFRED UNIVERSITY MUSEUM OF CERAMIC ART
ALFRED, NY

DRAWN BY TDB	HIGH ROOF STL SECTIONS	JOB# 14-68
CHK'D. BY -		SHEET# E10
DATE -	REYNOLDS IRON WORKS, INC.	
SCALE	157 PALMER INDUSTRIAL ROAD WILLIAMSPORT, PA 17701	

Global Detailing, Inc

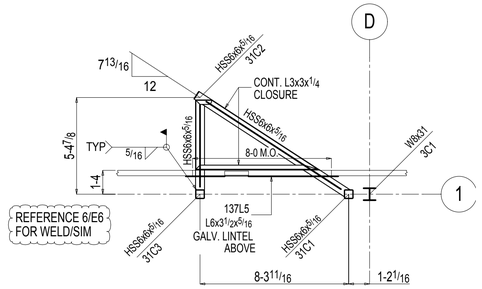

WINDOW BAY - PLAN

1) TOP OF STL EL: 46-10 1/2

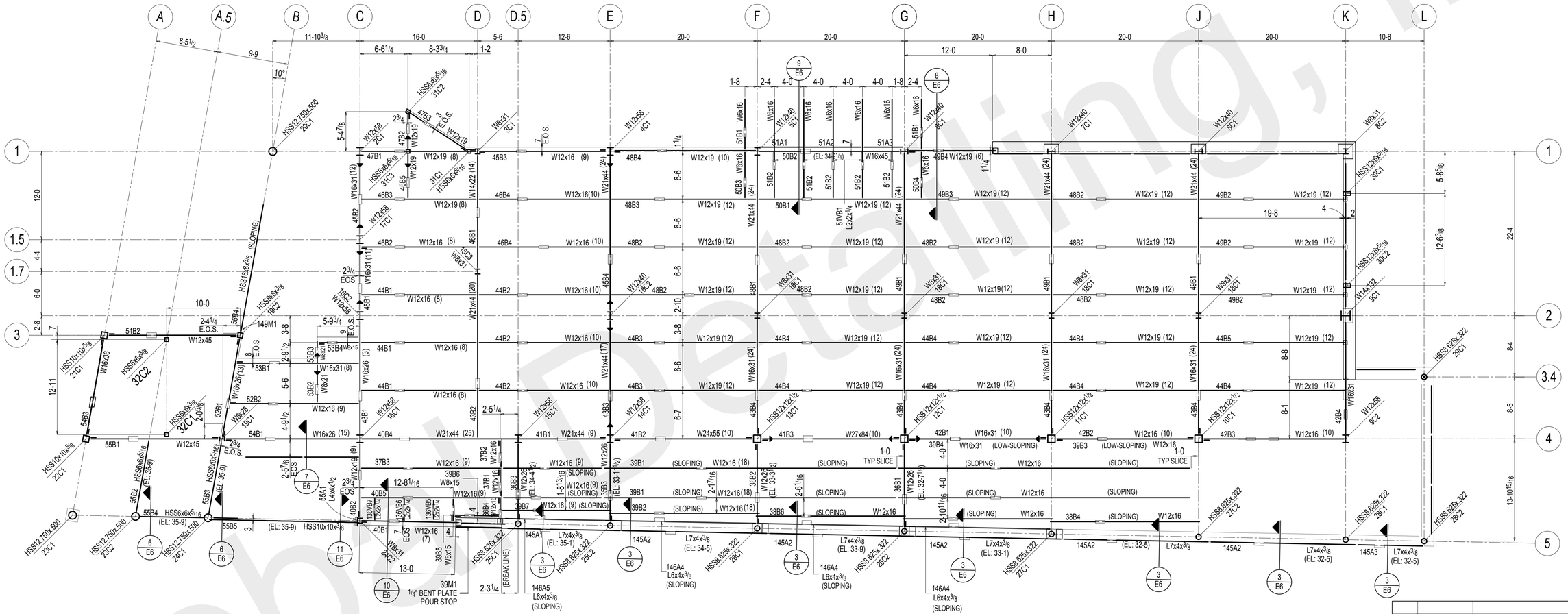
A
A.5
B
C
D
D.5
E
F
G
H
J
K
L
1
1.5
1.7
2
3
3.4
4
5
11-10 3/8
16-0
5-6
12-6
20-0
20-0
20-0
20-0
20-0
10-8
8-5 1/2
9-9
10°
6-6 1/4
8-3 3/4
1-2
12-0
8-0
HSS12.750x.500
20C1
HSS10x10x5/8
21C1
HSS8x6x3/8
32C2
HSS8x6x3/8
32C1
HSS10x10x5/8
22C1
HSS12.750x.500
23C1
HSS12.750x.500
23C2
HSS12.750x.500
24C1
HSS6x6x5/16
(EL: 35-9)
HSS10x10x3/8
(EL: 35-9)
HSS10x6x3/8 (SLOPING)
W12x45
W12x45
W12x19
W12x19 (8)
W12x16 (8)
W12x16 (9)
W12x16 (10)
W12x19 (10)
W12x19 (12)
W16x45
W12x19 (6)
W12x19 (12)
W12x19 (12)
W12x19 (12

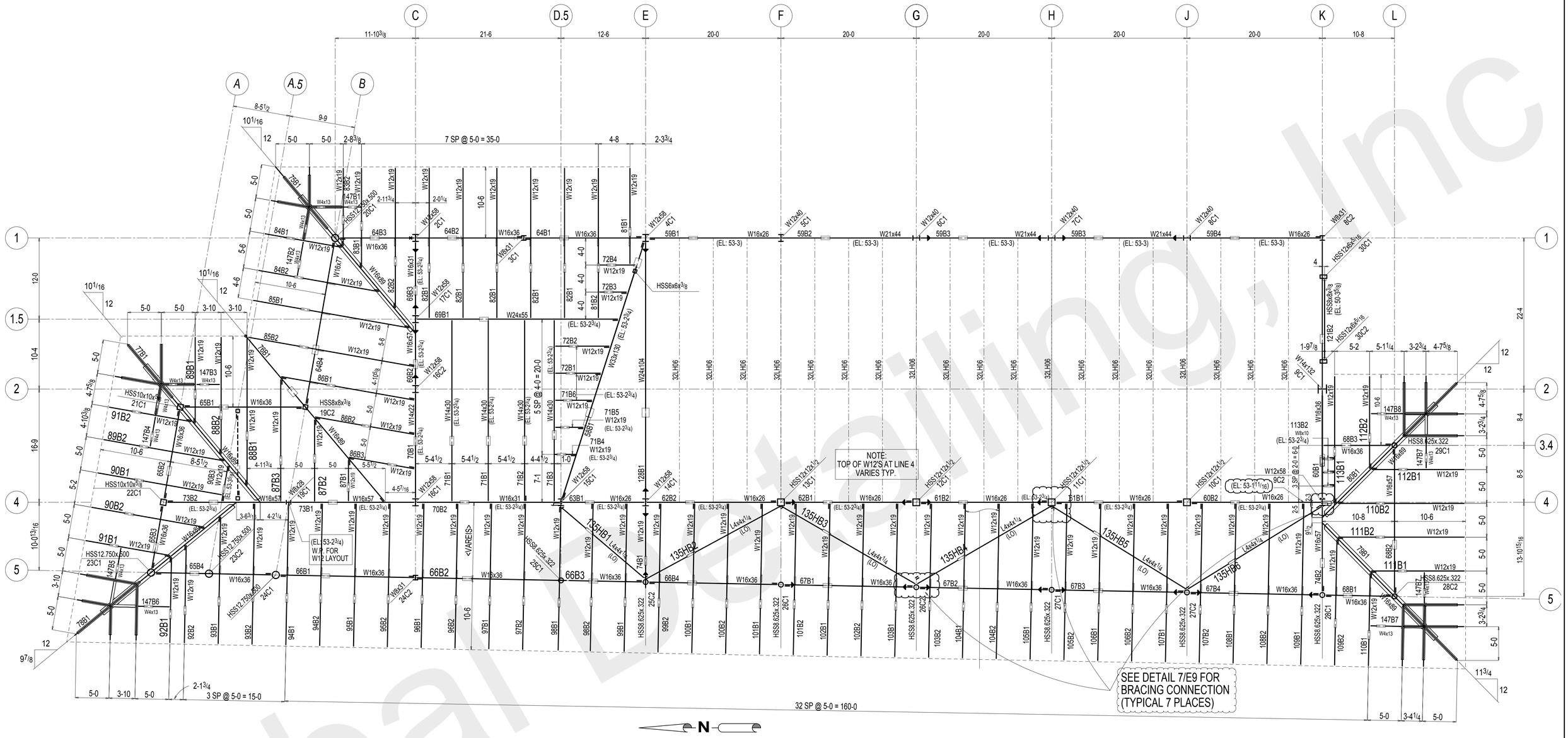

ROOF FRAMING PLAN

1) TOP OF SUPPORTING STL EL: 52-6 1/4 U.N.O.
2) STEEL ELEVATION VARIES, IF NOT NOTED, SEE SECTIONS

FIELD NOTES:

1) THE SNUG-TIGHT CONDITION IS DEFINED AS THE TIGHTNESS REQUIRED TO BRING THE CONNECTED PLIES INTO FIRM CONTACT. BOLTS TO BE TIGHTENED TO A CONDITION OTHER THAN SNUG-TIGHT SHALL BE CLEARLY IDENTIFIED ON THE DEISGN DRAWINGS.

2) CONNECTIONS MARKED WITH (▶—) REQUIRE FULL SLIP CRITICAL CONNECTIONS AND THIS IS DONE BY THE AISC: TURN OF THE NUT METHOD

*MATERIAL: A36 UNLESS NOTED OTHERWISE

*HOLES: 13/16 Dia U.N.O.

*WELDING: E70XX OR E7XT-X ALL WELDING MUST BE DONE IN ACCORDANCE WITH A.W.S. D1.1

*BOLTS: 3/4" Dia A325N U.N.O.

*PAINT: NO PAINT

*SURFACE PREPARATION: SSPC-SP3

REV	DATE	DESCRIPTION	BY
1	Oct 8 2014	FLD USE	TDB
A	Aug 27 2014	APPROVAL	

REVISIONS

ALFRED UNIVERSITY MUSEUM OF CERAMIC ART
ALFRED, NY

DRAWN BY TDB	ROOF FRAMING PLAN 1	JOB# 14-68
CHK'D. BY -		SHEET# E3
DATE -	REYNOLDS IRON WORKS, INC. 157 PALMER INDUSTRIAL ROAD WILLIAMSPORT, PA 17701	
SCALE		

Global Detailing, Inc

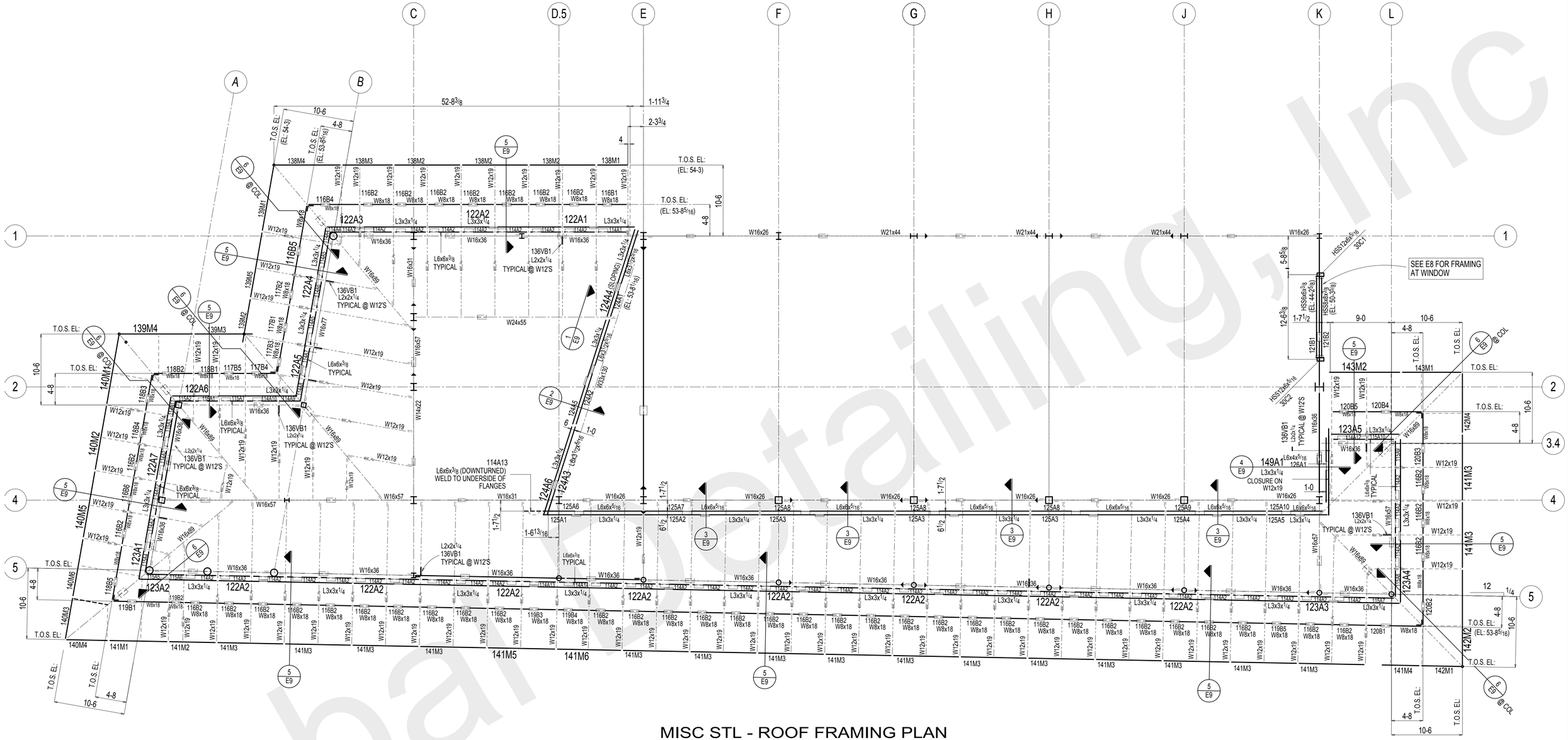

MISC STL - ROOF FRAMING PLAN

1) TOP OF SUPPORTING STL EL: 53-4 U.N.O. (@ HIGH POINT)
2) STEEL ELEVATION VARIES, IF NOT NOTED, SEE SECTIONS

FIELD NOTES:

1) THE SNUG-TIGHT CONDITION IS DEFINED AS THE TIGHTNESS REQUIRED TO BRING THE CONNECTED PLIES INTO FIRM CONTACT. BOLTS TO BE TIGHTENED TO A CONDITION OTHER THAN SNUG-TIGHT SHALL BE CLEARLY IDENTIFIED ON THE DEISGN DRAWINGS.

2) CONNECTIONS MARKED WITH (▶—) REQUIRE FULL SLIP CRITICAL CONNECTIONS AND THIS IS DONE BY THE AISC: TURN OF THE NUT METHOD

*MATERIAL: A36 UNLESS NOTED OTHERWISE

*HOLES: 13/16 Dia U.N.O.

*WELDING: E70XX OR E7XT-X ALL WELDING MUST BE DONE IN ACCORDANCE WITH A.W.S. D1.1

*BOLTS: 3/4" Dia A325N U.N.O.

*PAINT: NO PAINT

*SURFACE PREPARATION: SSPC-SP3

REV	DATE	DESCRIPTION	BY
1	Oct 8 2014	FLD USE	TDB
A	Aug 27 2014	APPROVAL	

REVISIONS

ALFRED UNIVERSITY MUSEUM OF CERAMIC ART
ALFRED, NY

DRAWN BY TDB	ROOF FRAMING PLAN 2	JOB# 14-68
CHK'D. BY -		SHEET# E4
DATE -	REYNOLDS IRON WORKS, INC. 157 PALMER INDUSTRIAL ROAD WILLIAMSPORT, PA 17701	
SCALE		

Global Detailing, Inc

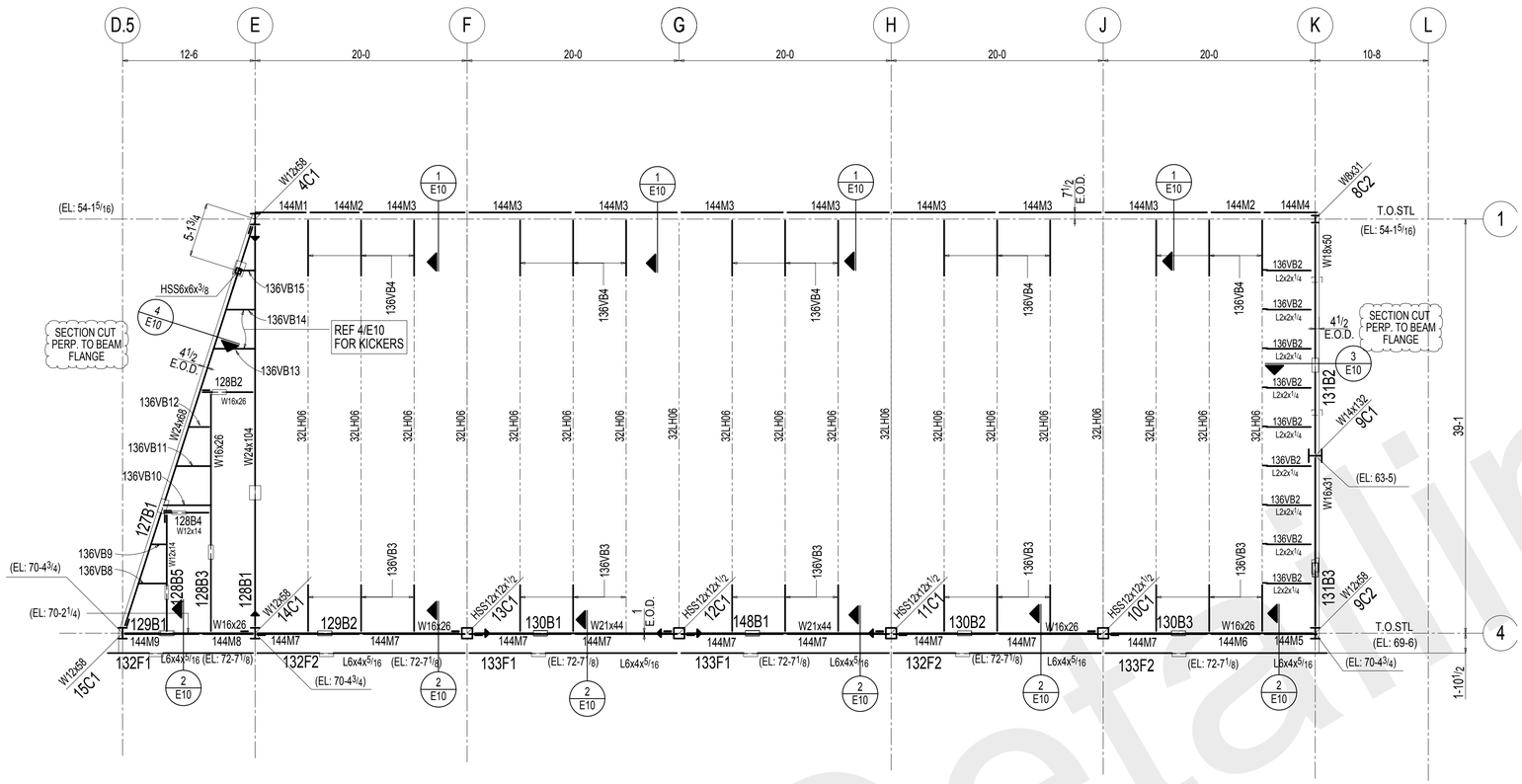

HIGH ROOF FRAMING PLAN

1) TOP OF SUPPORTING STL EL:69-6 U.N.O. (@ HIGH POINT)
2) STEEL ELEVATION VARIES, IF NOT NOTED, SEE SECTIONS

FIELD NOTES:

1) THE SNUG-TIGHT CONDITION IS DEFINED AS THE TIGHTNESS REQUIRED TO BRING THE CONNECTED PLIES INTO FIRM CONTACT. BOLTS TO BE TIGHTENED TO A CONDITION OTHER THAN SNUG-TIGHT SHALL BE CLEARLY IDENTIFIED ON THE DEISGN DRAWINGS.

2) CONNECTIONS MARKED WITH (▶—) REQUIRE FULL SLIP CRITICAL CONNECTIONS AND THIS IS DONE BY THE AISC: TURN OF THE NUT METHOD

*MATERIAL: A36 UNLESS NOTED OTHERWISE

*HOLES: 13/16 Dia U.N.O.

*WELDING: E70XX OR E7XT-X ALL WELDING MUST BE DONE IN ACCORDANCE WITH A.W.S. D1.1

*BOLTS: 3/4" Dia A325N U.N.O.

*PAINT: NO PAINT

*SURFACE PREPARATION: SSPC-SP3

REV	DATE	DESCRIPTION	BY
1	Oct 8 2014	FLD USE	TDB
A	Aug 27 2014	APPROVAL	

REVISIONS

ALFRED UNIVERSITY MUSEUM OF CERAMIC ART
ALFRED, NY

DRAWN BY TDB	HIGH ROOF FRAMING PLAN	JOB# 14-68
CHK'D. BY -		SHEET# E5
DATE -	REYNOLDS IRON WORKS, INC. 157 PALMER INDUSTRIAL ROAD WILLIAMSPORT, PA 17701	
SCALE		

Global Detailing, Inc

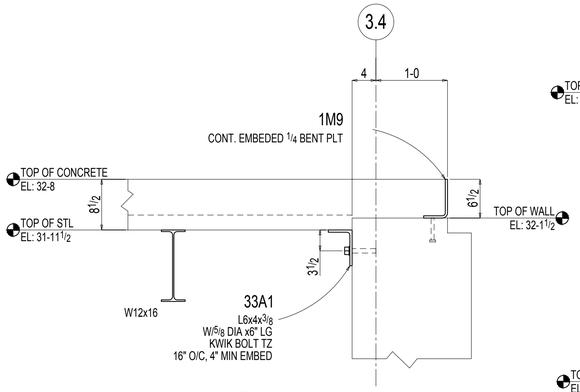

1 SECTION
REF:

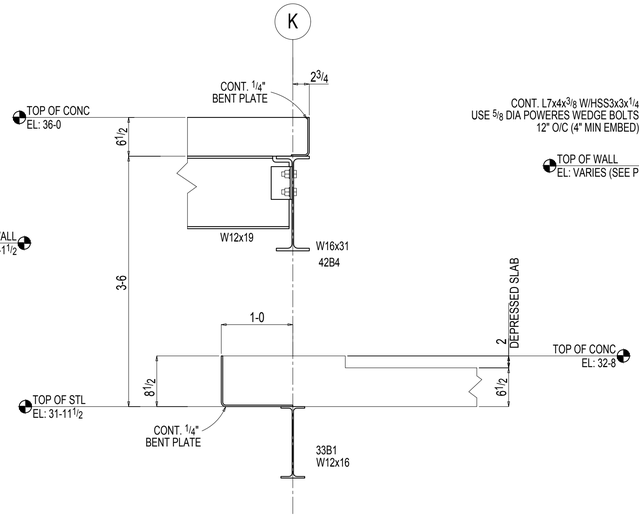

2 SECTION
REF: -

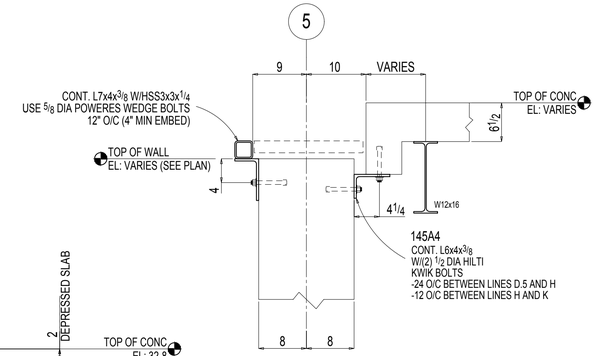

3 SECTION
REF:

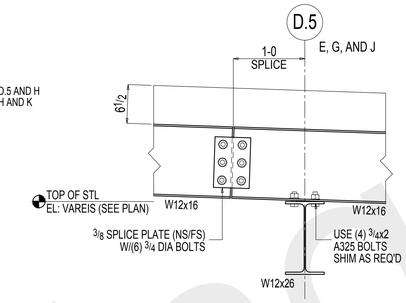

4 SECTION
REF: -

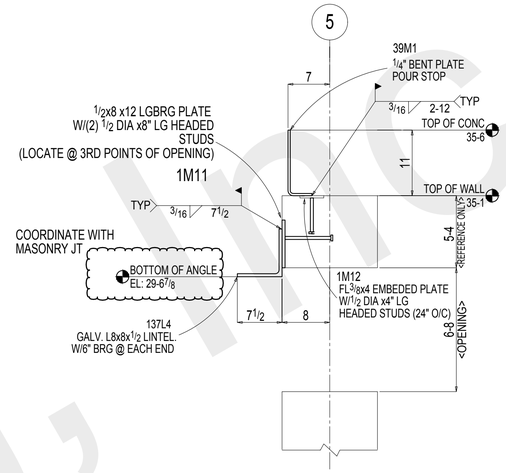

5 SECTION
REF: 16/S-5

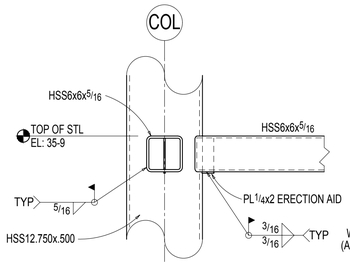

6 SECTION
REF: -

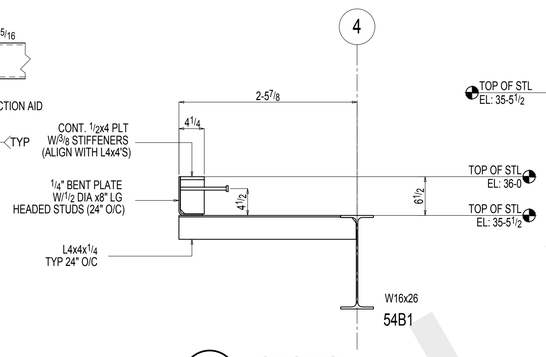

7 SECTION
REF: -

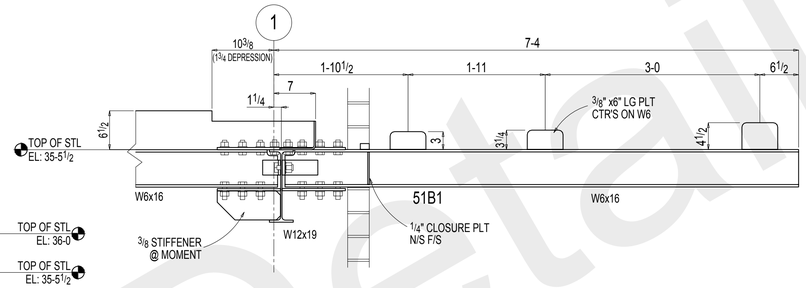

8 SECTION
REF: -

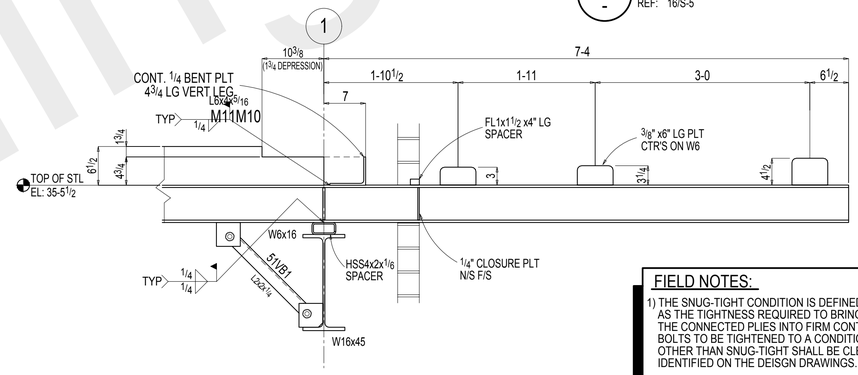

9 SECTION
REF: -

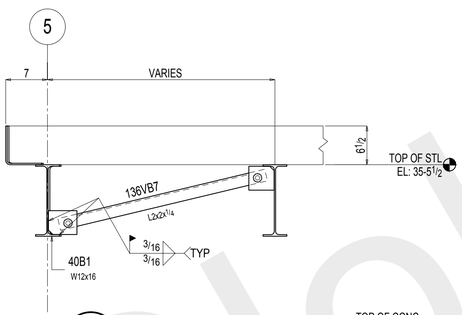

10 SECTION
REF:

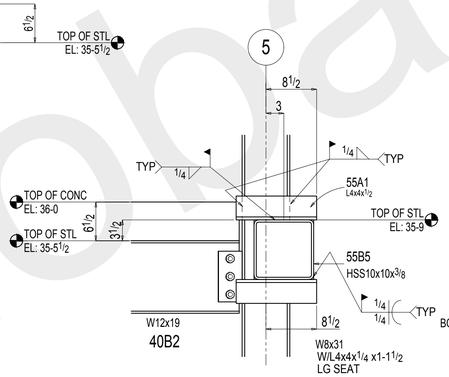

11 SECTION
REF:

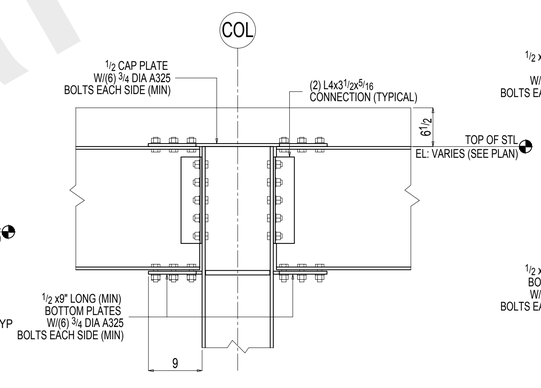

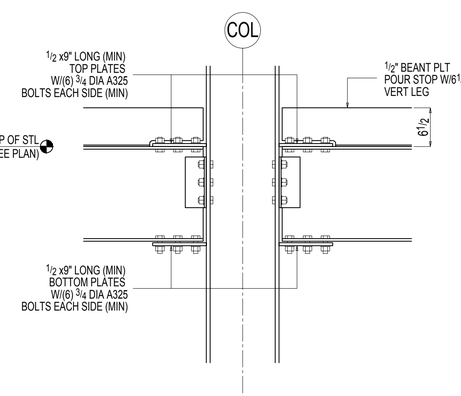

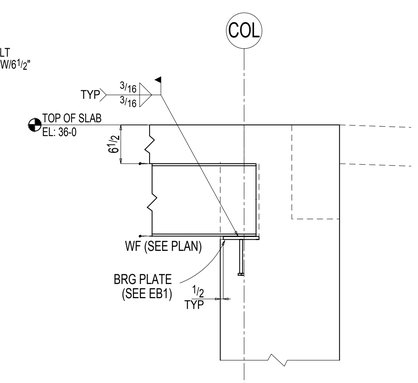

TYP SECTION
REF: 2/S-4

TYPICAL MOMENT CONNECTIONS

1) SEE PLAN FOR LOCATION - INDICATED BY (◀ ▶)

FIELD NOTES:

1) THE SNUG-TIGHT CONDITION IS DEFINED AS THE TIGHTNESS REQUIRED TO BRING THE CONNECTED PLIES INTO FIRM CONTACT. BOLTS TO BE TIGHTENED TO A CONDITION OTHER THAN SNUG-TIGHT SHALL BE CLEARLY IDENTIFIED ON THE DEISGN DRAWINGS.

2) CONNECTIONS MARKED WITH (▶—◀) REQUIRE FULL SLIP CRITICAL CONNECTIONS AND THIS IS DONE BY THE AISC: TURN OF THE NUT METHOD

*MATERIAL: A36 UNLESS NOTED OTHERWISE

*HOLES: 13/16 Dia U.N.O.

*WELDING: E70XX OR E7XT-X ALL WELDING MUST BE DONE IN ACCORDANCE WITH A.W.S. D1.1

*BOLTS: 3/4" Dia A325N U.N.O.

*PAINT: SEE DETAILS

*SURFACE PREPARATION: SSPC-SP3

REV	DATE	DESCRIPTION	BY
1	Oct 8 2014	FLD USE	TDB
A	Aug 27 2014	APPROVAL	

REVISIONS

ALFRED UNIVERSITY MUSEUM OF CERAMIC ART
ALFRED, NY

DRAWN BY TC	ANCHOR ROD PLAN	JOB# 14-68
CHK'D. BY GDI		SHEET# E6
DATE 05.28.14	REYNOLDS IRON WORKS, INC.	
SCALE	157 PALMER INDUSTRIAL ROAD WILLIAMSPORT, PA 17701	

Global Detailing, Inc.

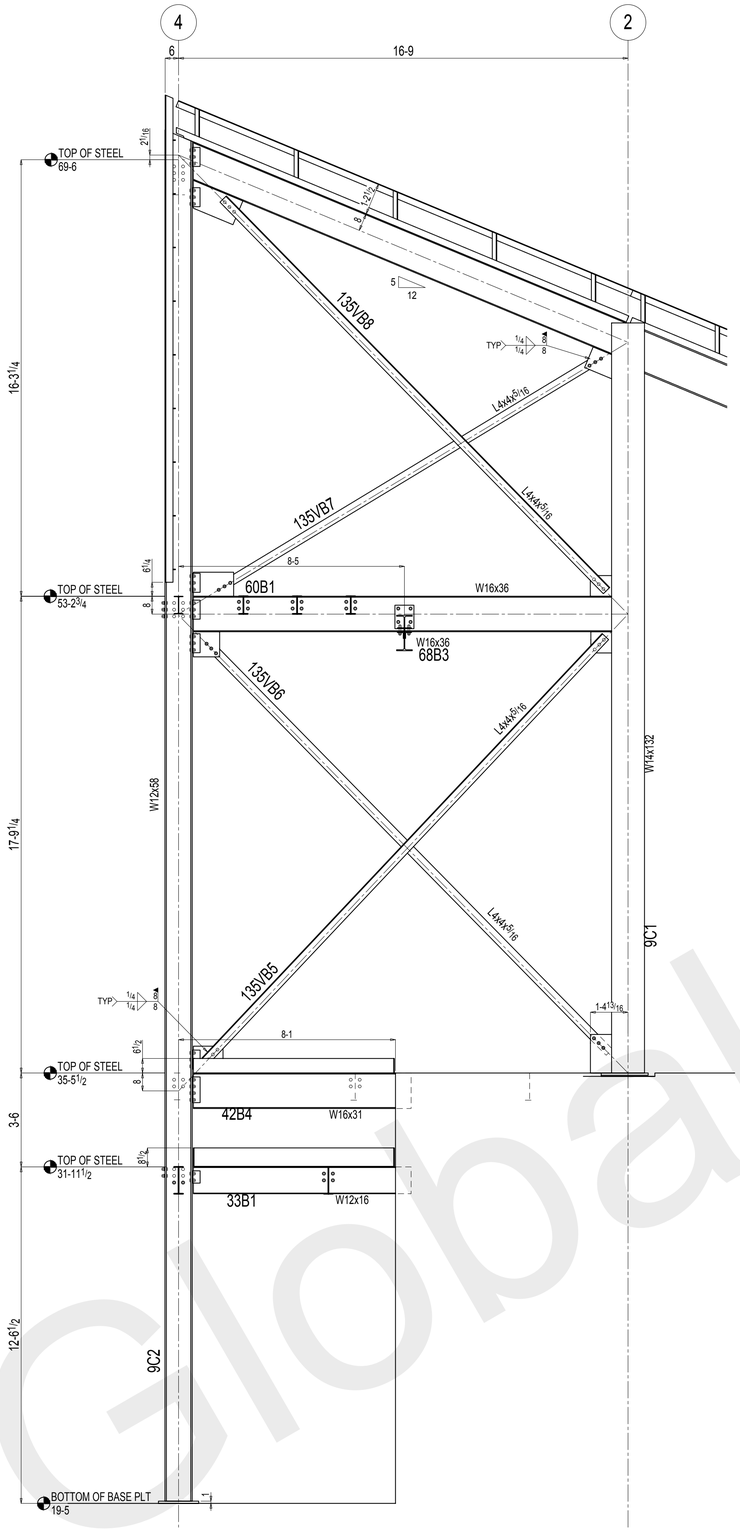

BRACING ELEVATION - LINE K

1) LOOKING NORTH

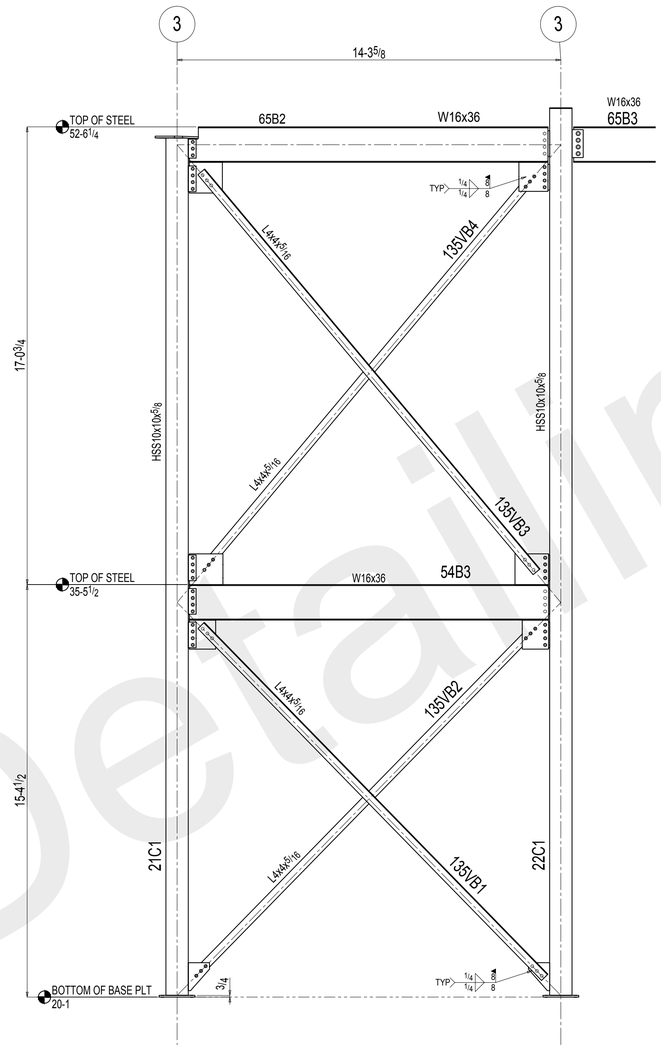

BRACING ELEVATION - LINE A

1) LOOKING SOUTH

FIELD NOTES:

1) THE SNUG-TIGHT CONDITION IS DEFINED AS THE TIGHTNESS REQUIRED TO BRING THE CONNECTED PLIES INTO FIRM CONTACT. BOLTS TO BE TIGHTENED TO A CONDITION OTHER THAN SNUG-TIGHT SHALL BE CLEARLY IDENTIFIED ON THE DEISGN DRAWINGS.

2) CONNECTIONS MARKED WITH (▶—) REQUIRE FULL SLIP CRITICAL CONNECTIONS AND THIS IS DONE BY THE AISC: TURN OF THE NUT METHOD

*MATERIAL: A36 UNLESS NOTED OTHERWISE

*HOLES: 13/16 Dia U.N.O.

*WELDING: E70XX OR E7XT-X ALL WELDING MUST BE DONE IN ACCORDANCE WITH A.W.S. D1.1

*BOLTS: 3/4" Dia A325N U.N.O.

*PAINT: SEE DETAILS

*SURFACE PREPARATION: SSPC-SP3

REV	DATE	DESCRIPTION	BY
1	Oct 8 2014	FLD USE	TDB
A	Aug 27 2014	APPROVAL	

REVISIONS

ALFRED UNIVERSITY MUSEUM OF CERAMIC ART
ALFRED, NY

DRAWN BY TDB	BRACING FRAMES	JOB# 14-68
CHK'D. BY -		SHEET# E7
DATE -	REYNOLDS IRON WORKS, INC.	
SCALE	157 PALMER INDUSTRIAL ROAD WILLIAMSPORT, PA 17701	

Global Detailing, Inc

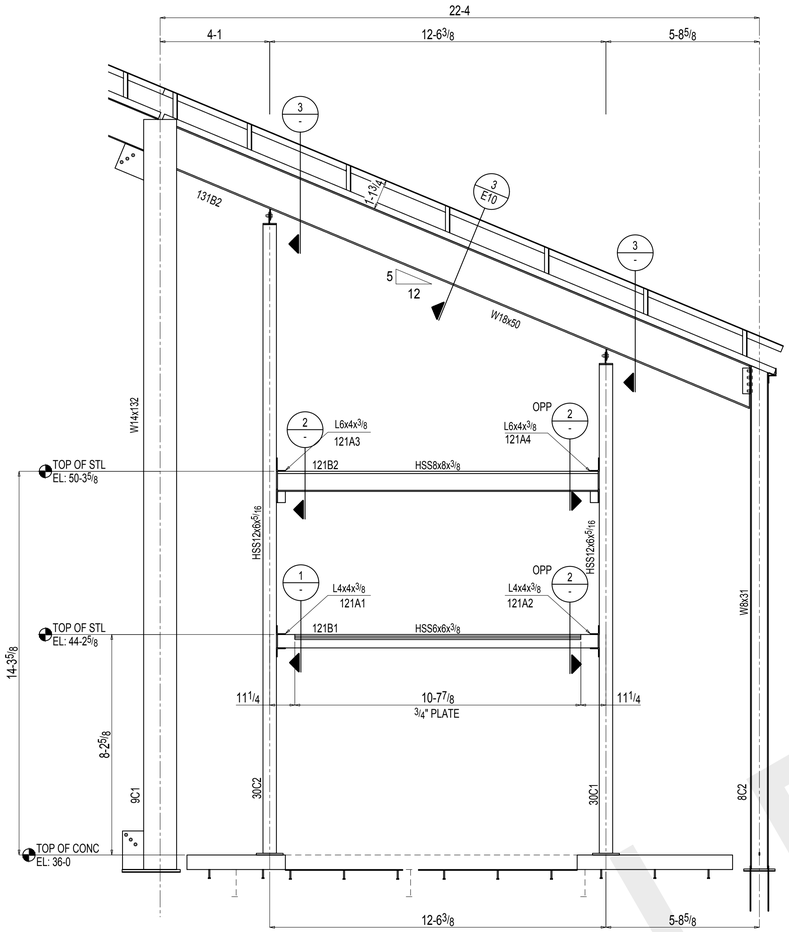

WINDOW OPENING - LINE K

1) LOOKING NORTH

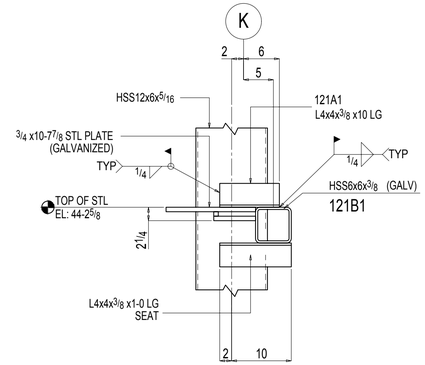

1 - SECTION

REF: 13/SSK-7

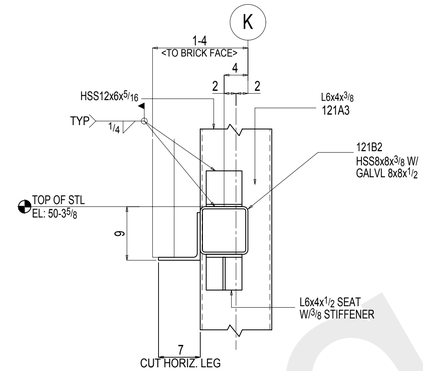

2 - SECTION

REF: 13/SSK-7

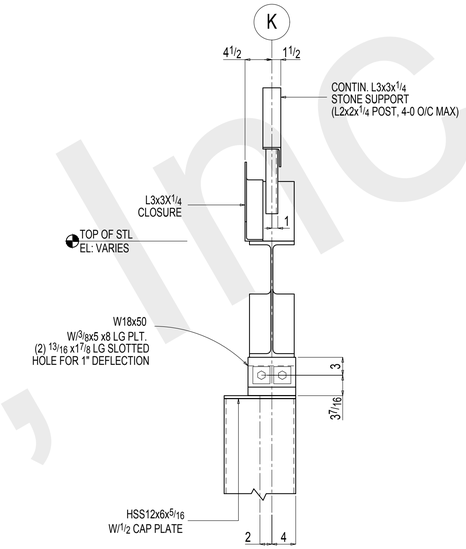

3 - SECTION

REF: 13/SSK-7

Global Detailing, Inc

FIELD NOTES:

1) THE SNUG-TIGHT CONDITION IS DEFINED AS THE TIGHTNESS REQUIRED TO BRING THE CONNECTED PLIES INTO FIRM CONTACT. BOLTS TO BE TIGHTENED TO A CONDITION OTHER THAN SNUG-TIGHT SHALL BE CLEARLY IDENTIFIED ON THE DEISGN DRAWINGS.

2) CONNECTIONS MARKED WITH (▶—) REQUIRE FULL SLIP CRITICAL CONNECTIONS AND THIS IS DONE BY THE AISC: TURN OF THE NUT METHOD

*MATERIAL: A36 UNLESS NOTED OTHERWISE

*HOLES: 13/16 Dia U.N.O.

*WELDING: E70XX OR E7XT-X ALL WELDING MUST BE DONE IN ACCORDANCE WITH A.W.S. D1.1

*BOLTS: 3/4" Dia A325N U.N.O.

*PAINT: SEE DETAILS

*SURFACE PREPARATION: SSPC-SP3

REV	DATE	DESCRIPTION	BY
1	Oct 8 2014	FLD USE	TDB
A	Aug 27 2014	APPROVAL	

REVISIONS

ALFRED UNIVERSITY MUSEUM OF CERAMIC ART
ALFRED, NY

DRAWN BY TDB	WINDOW/DOOR FRAMING ELEVATION	JOB# 14-68
CHK'D. BY -		SHEET# E8
DATE -	REYNOLDS IRON WORKS, INC.	
SCALE	157 PALMER INDUSTRIAL ROAD WILLIAMSPORT, PA 17701	

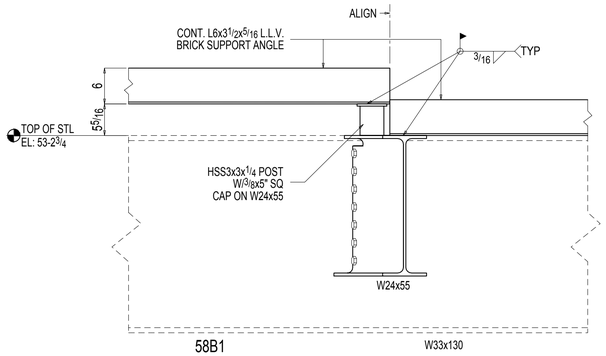

1 - SECTION
REF:

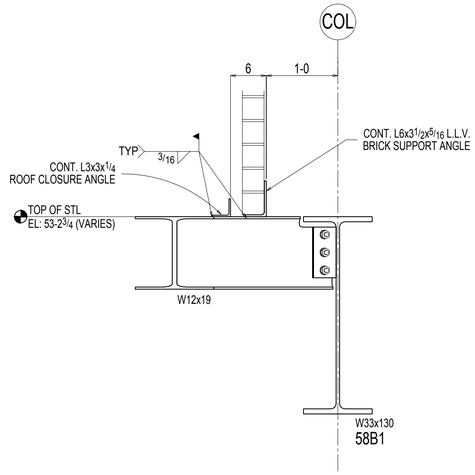

2 - SECTION
REF:

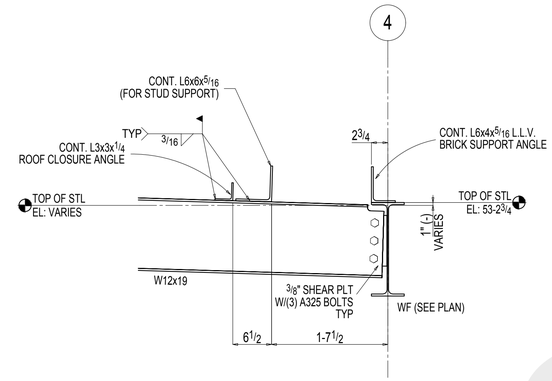

3 - SECTION
REF:

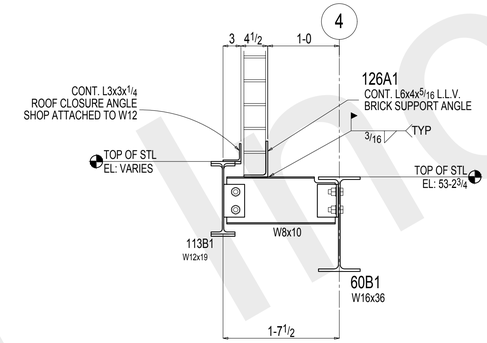

4 - SECTION
REF:

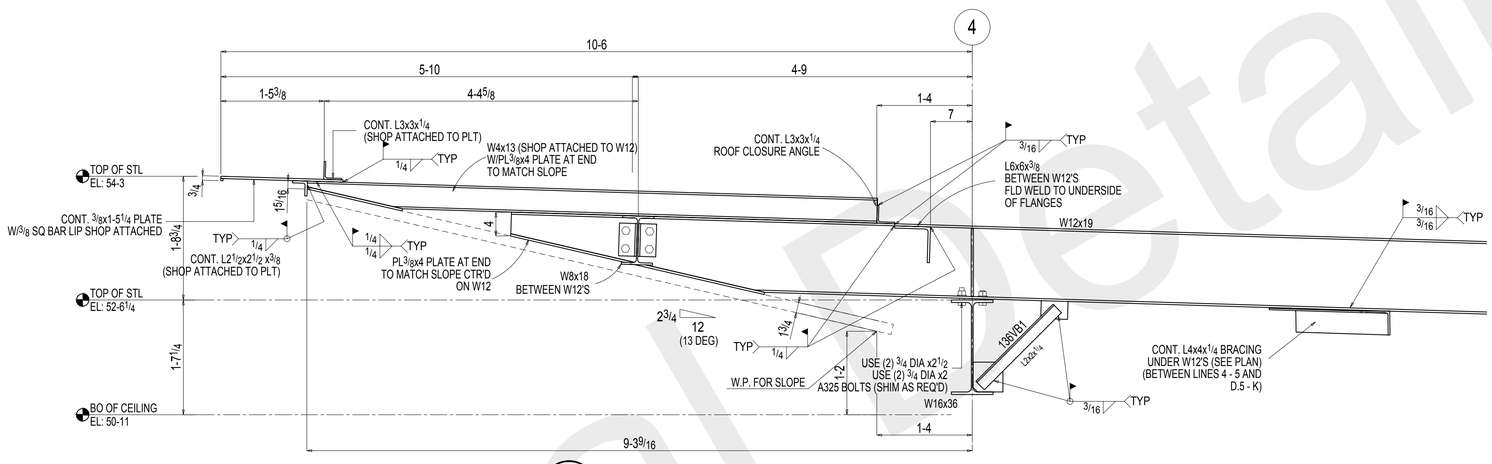

5 - SECTION
REF: S-5

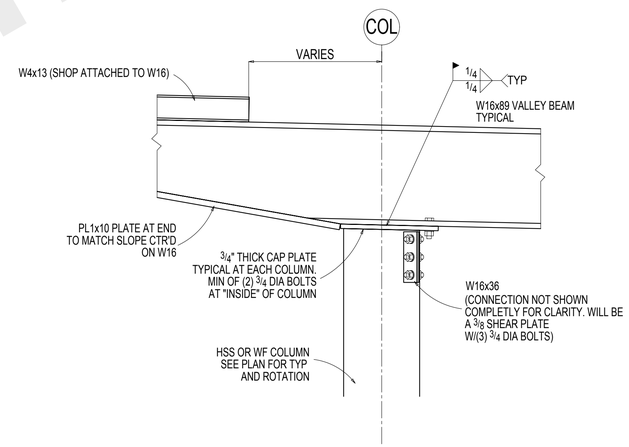

6 - SECTION
REF: S-5

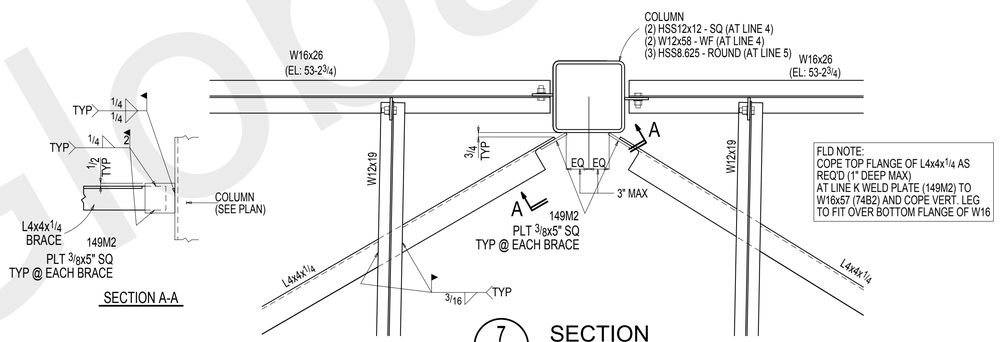

7 - SECTION
REF: -

FIELD NOTES:

1) THE SNUG-TIGHT CONDITION IS DEFINED AS THE TIGHTNESS REQUIRED TO BRING THE CONNECTED PLIES INTO FIRM CONTACT. BOLTS TO BE TIGHTENED TO A CONDITION OTHER THAN SNUG-TIGHT SHALL BE CLEARLY IDENTIFIED ON THE DEISGN DRAWINGS.

2) CONNECTIONS MARKED WITH (▶—) REQUIRE FULL SLIP CRITICAL CONNECTIONS AND THIS IS DONE BY THE AISC: TURN OF THE NUT METHOD

*MATERIAL:	A36 UNLESS NOTED OTHERWISE
*HOLES:	13/16 Dia U.N.O.
*WELDING:	E70XX OR E7XT-X ALL WELDING MUST BE DONE IN ACCORDANCE WITH A.W.S. D1.1
*BOLTS:	¾" Dia A325N U.N.O.
*PAINT:	SEE DETAILS
*SURFACE PREPARATION:	SSPC-SP3

REV	DATE	DESCRIPTION	BY
1	Oct 8 2014	FLD USE	TDB
A	Aug 27 2014	APPROVAL	

REVISIONS

ALFRED UNIVERSITY MUSEUM OF CERAMIC ART
ALFRED, NY

DRAWN BY TDB	"FLAT" ROOF SECTIONS	JOB# 14-68
CHK'D. BY -		SHEET# E9
DATE -	REYNOLDS IRON WORKS, INC.	
SCALE	157 PALMER INDUSTRIAL ROAD WILLIAMSPORT, PA 17701	

Global Detailing, Inc

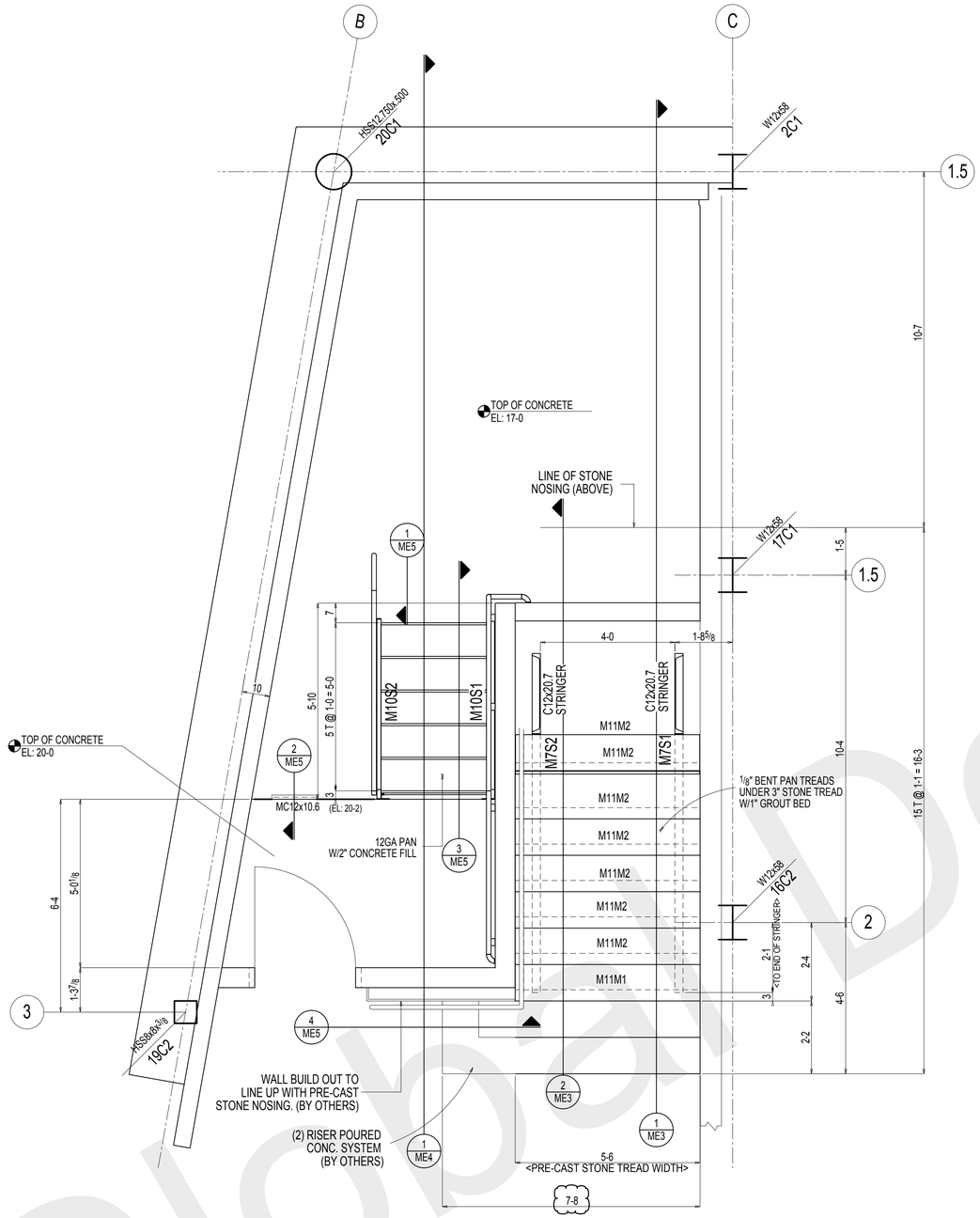

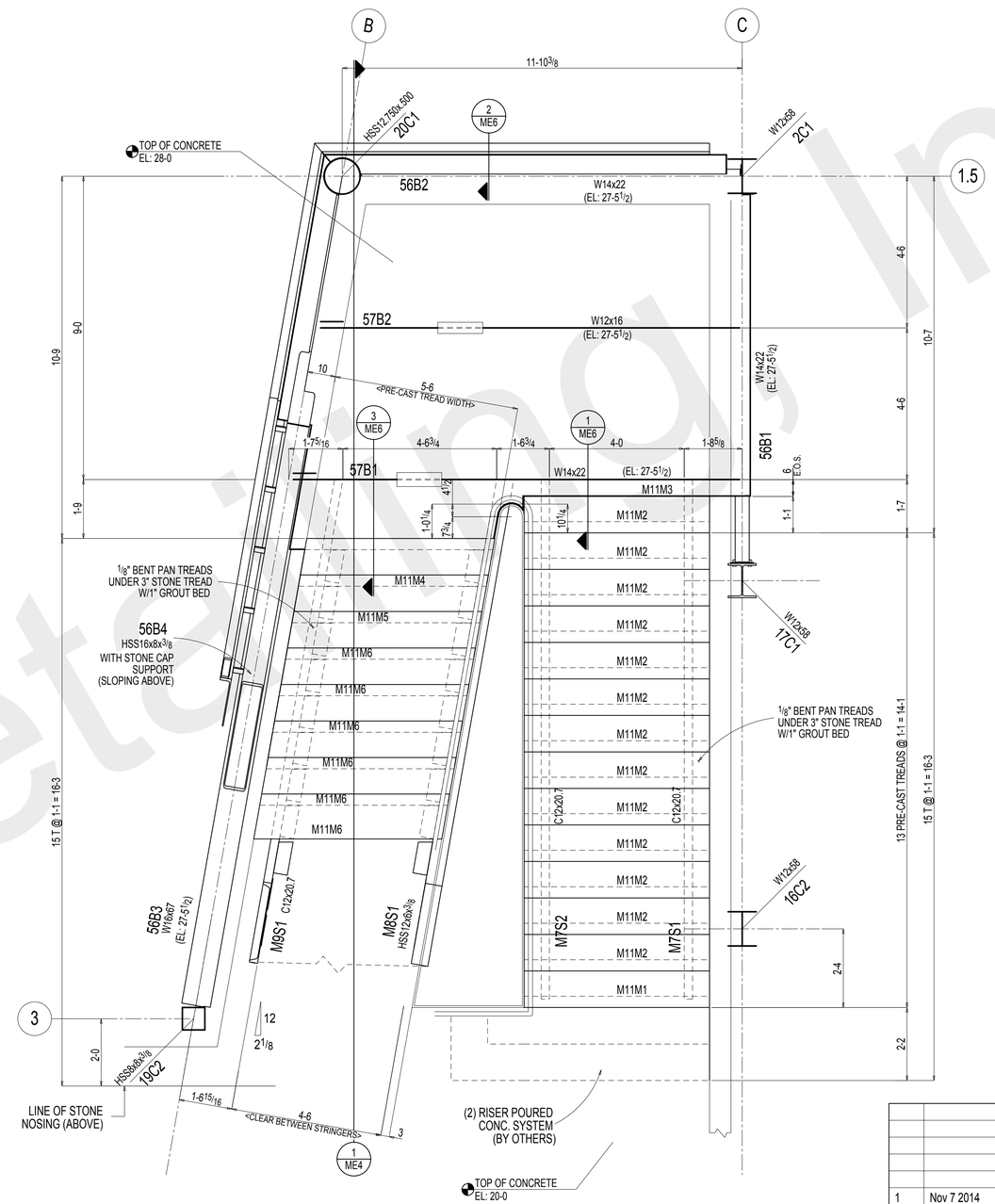

SHOP/FLD NOTE:
RAIL NOT RELEASED
*REQUIRES FLD VERIFICATION

REV	DATE	DESCRIPTION	BY
1	Nov 7 2014	FLD USE - CHASIS ONLY	TDB

REVISIONS

*MATERIAL: A36 UNLESS NOTED OTHERWISE

*HOLES: 13/16 Dia U.N.O.

*WELDING: E70XX OR E7XT-X ALL WELDING MUST BE DONE IN ACCORDANCE WITH A.W.S. D1.1

*BOLTS: 3/4" Dia A325N U.N.O.

*PAINT: SEE DETAILS

*SURFACE PREPARATION: SSPC-SP3

ALFRED UNIVERSITY MUSEUM OF CERAMIC ART
ALFRED, NY

DRAWN BY TDB	MAIN STAIR PLAN	JOB# 14-68
CHK'D. BY -		SHEET# ME1
DATE -	REYNOLDS IRON WORKS, INC.	
SCALE	157 PALMER INDUSTRIAL ROAD WILLIAMSPORT, PA 17701	

Global Detailing, Inc

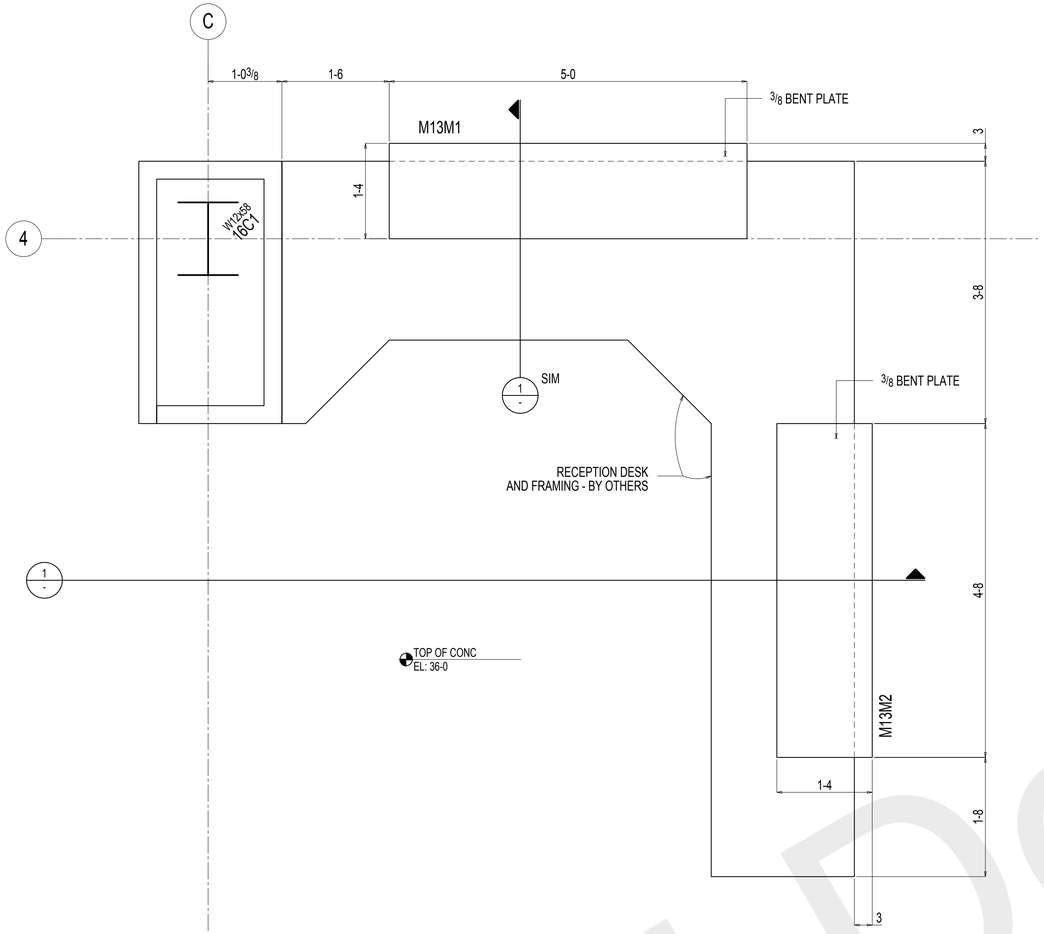

RECEPTION DESK - RM#203

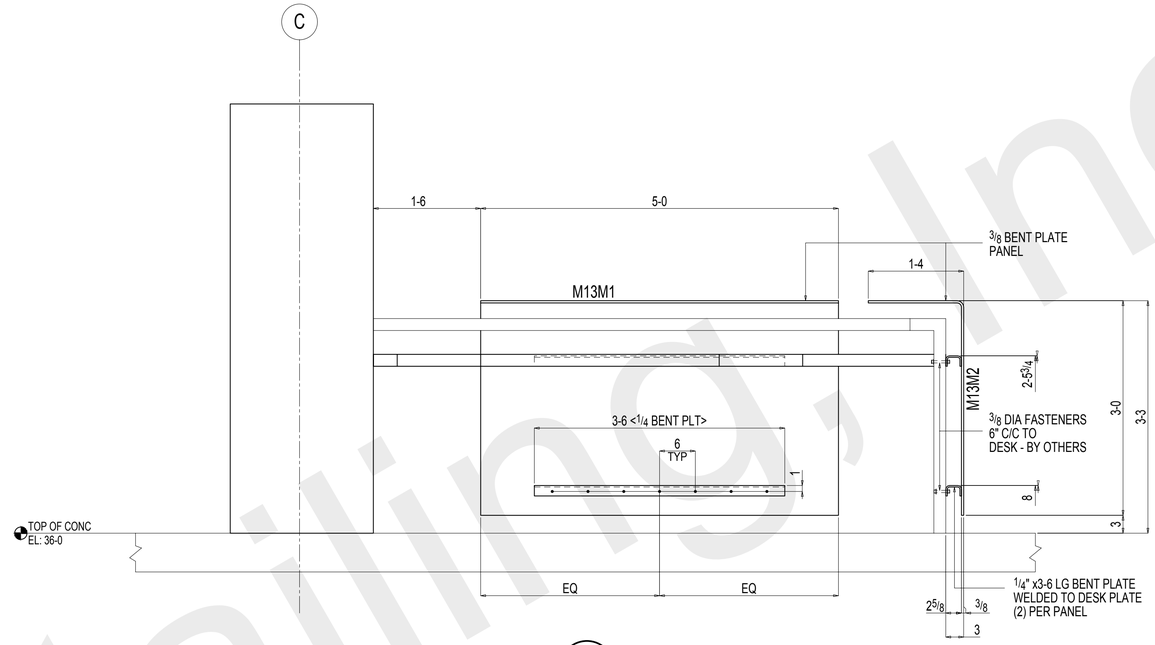

1 / - SECTION
REF: -

RECEPTION DESK - RM#203

FLD VERIFY BEFORE FABRICATION

REV	DATE	DESCRIPTION	BY
1	Dec 10 2014	FLD USE	TDB
A	Nov 11 2014	APPROVAL	TDB

REVISIONS

*MATERIAL: A36 UNLESS NOTED OTHERWISE

*HOLES: 13/16 Dia U.N.O.

*WELDING: E70XX OR E7XT-X ALL WELDING MUST BE DONE IN ACCORDANCE WITH A.W.S. D1.1

*BOLTS: 3/4" Dia A325N U.N.O.

*PAINT: SEE DETAILS

*SURFACE PREPARATION: SSPC-SP3

ALFRED UNIVERSITY MUSEUM OF CERAMIC ART
ALFRED, NY

DRAWN BY TDB	RECEPTION DESK	JOB# 14-68
CHK'D. BY -		SHEET# ME10
DATE 11.11.14	REYNOLDS IRON WORKS, INC. 157 PALMER INDUSTRIAL ROAD WILLIAMSPORT, PA 17701	
SCALE		

Global Detailing, Inc

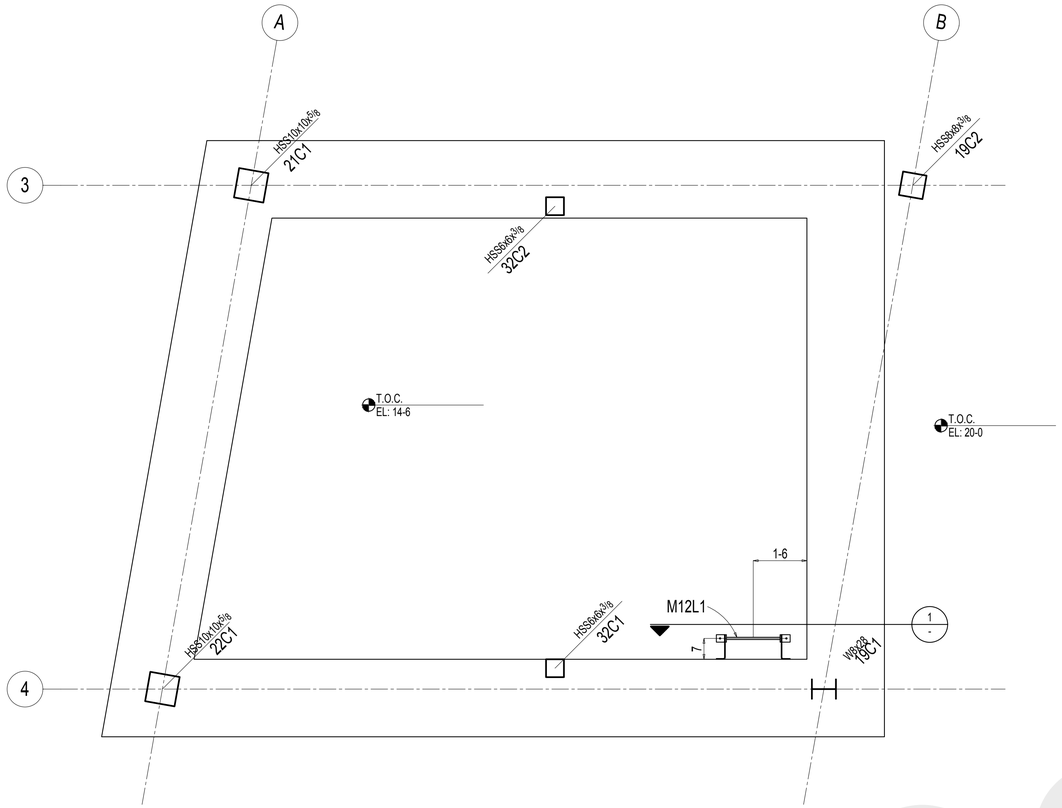

ELEVATOR PIT - PLAN

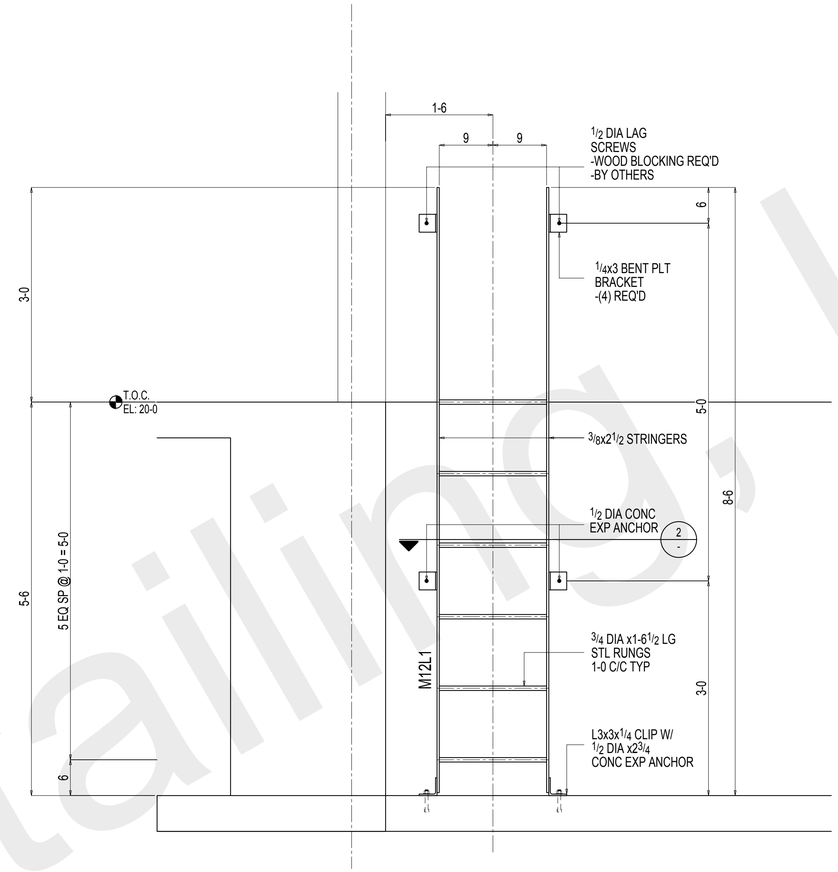

1 / - SECTION
REF: -

ELEVATOR PIT - ELEVATION

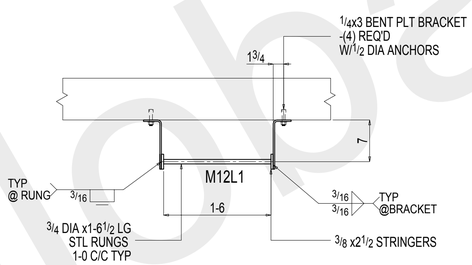

2 / - SECTION
REF: -

FLD VERIFY BEFORE FABRICATION

*MATERIAL: A36 UNLESS NOTED OTHERWISE

*HOLES: 13/16 Dia U.N.O.

*WELDING: E70XX OR E7XT-X ALL WELDING MUST BE DONE IN ACCORDANCE WITH A.W.S. D1.1

*BOLTS: 3/4" Dia A325N U.N.O.

*PAINT: SEE DETAILS

*SURFACE PREPARATION: SSPC-SP3

REV	DATE	DESCRIPTION	BY
1	Dec 10 2014	FLD USE	TDB
A	Nov 11 2014	APPROVAL	TDB

REVISIONS

ALFRED UNIVERSITY MUSEUM OF CERAMIC ART
ALFRED, NY

DRAWN BY TDB
CHK'D. BY -
DATE 11.11.14
SCALE

ELEVATOR PIT LADDER

JOB# 14-68
SHEET# ME11

REYNOLDS IRON WORKS, INC.
157 PALMER INDUSTRIAL ROAD
WILLIAMSPORT, PA 17701

Global Detailing, Inc

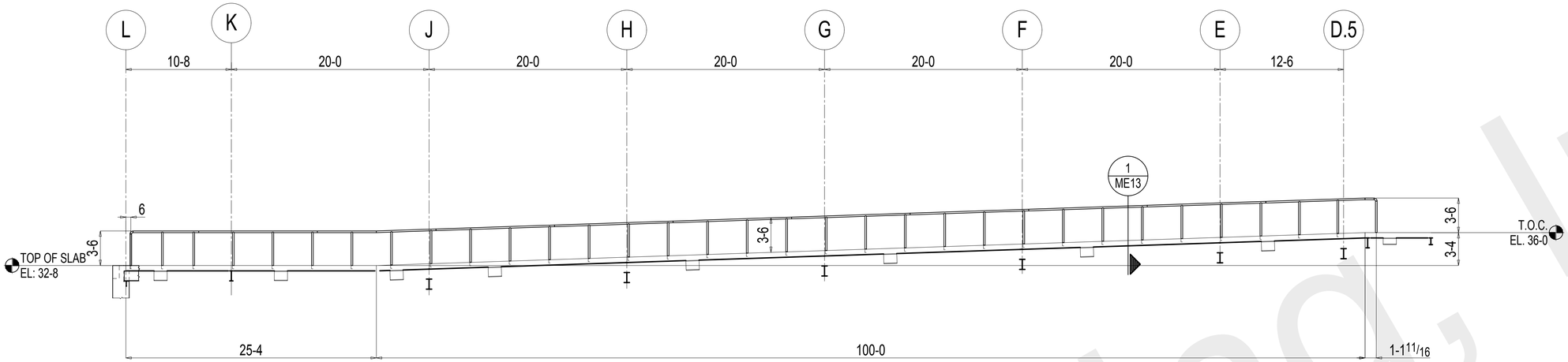

STAINLESS STL RAIL - GALLERY 201 - ELEVATION

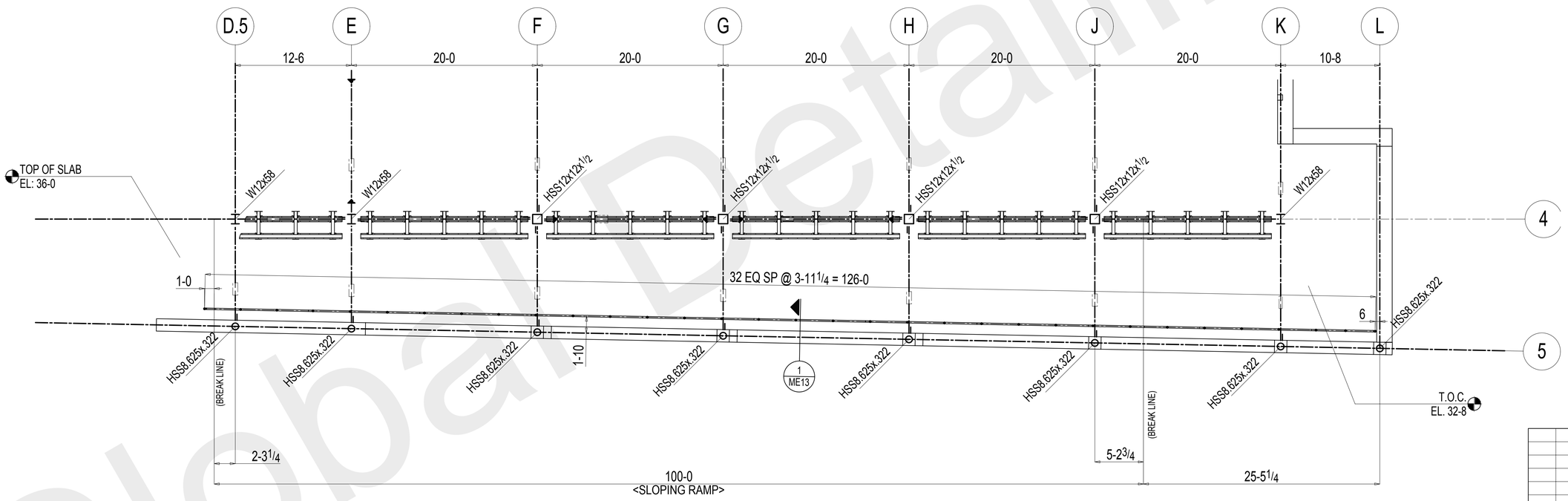

STAINLESS STL RAIL - GALLERY 201 - PLAN

ARCHIECT:
PLEASE PROVIDE FINISH TYPE
FOR STAINLESS RAIL

*MATERIAL: A36 UNLESS NOTED OTHERWISE

*HOLES: 13/16 Dia U.N.O.

*WELDING: E70XX OR E7XT-X ALL WELDING MUST BE DONE IN ACCORDANCE WITH A.W.S. D1.1

*BOLTS: 3/4" Dia A325N U.N.O.

*PAINT: SEE DETAILS

*SURFACE PREPARATION: SSPC-SP3

REV	DATE	DESCRIPTION	BY

REVISIONS

ALFRED UNIVERSITY MUSEUM OF CERAMIC ART
ALFRED, NY

DRAWN BY TDB	STAINLESS STL RAIL ELEVATION	JOB# 14-68
CHK'D. BY -		SHEET# ME12
DATE 11.21.14	REYNOLDS IRON WORKS, INC. 157 PALMER INDUSTRIAL ROAD WILLIAMSPORT, PA 17701	
SCALE		

Global Detailing, Inc

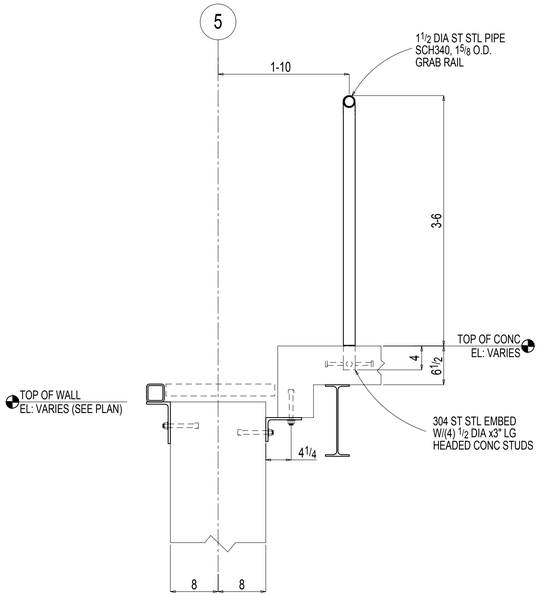

1 ME13 SECTION
REF: -

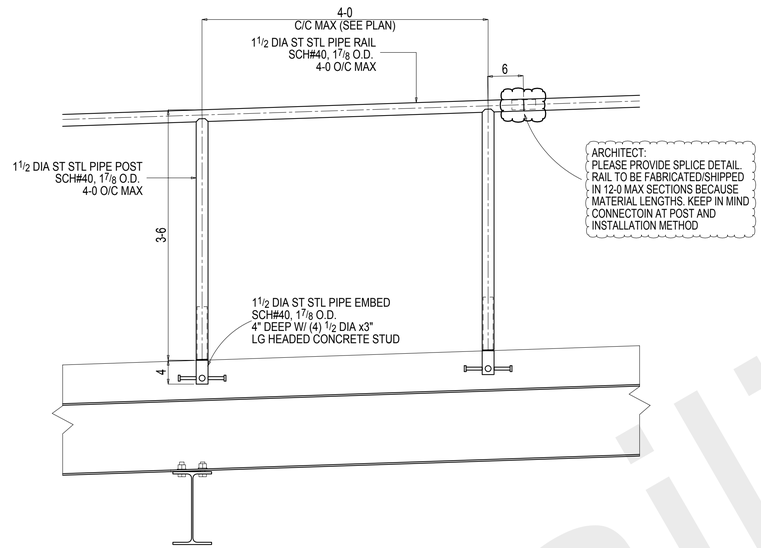

TYPICAL RAIL ELEVATION

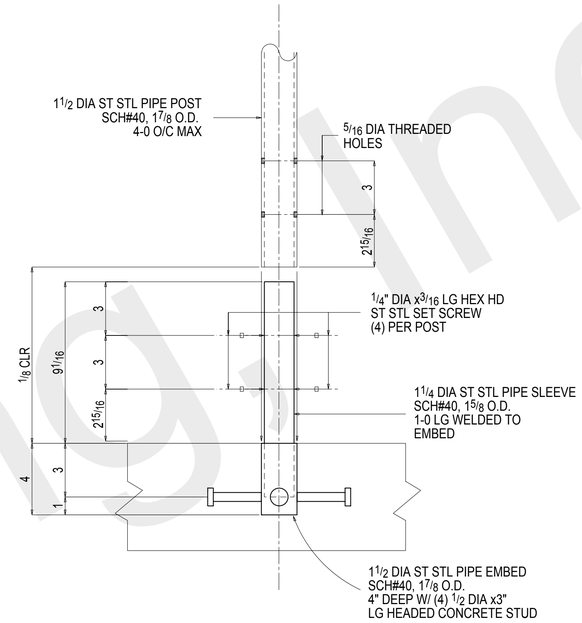

TYPICAL EMBED DETAIL

ARCHIECT:
PLEASE PROVIDE FINISH TYPE
FOR STAINLESS RAIL

*MATERIAL: SS 304 U.N.O.

*HOLES: 13/16 Dia U.N.O.

*WELDING: E70XX OR E7XT-X ALL WELDING MUST BE DONE IN ACCORDANCE WITH A.W.S. D1.1

*BOLTS: 3/4" Dia A325N U.N.O.

*PAINT: SEE DETAILS

*SURFACE PREPARATION: SSPC-SP3

REV	DATE	DESCRIPTION	BY

REVISIONS

ALFRED UNIVERSITY MUSEUM OF CERAMIC ART
ALFRED, NY

DRAWN BY TDB	STAINLESS STL RAIL FLD SECTIONS	JOB# 14-68
CHK'D. BY -		SHEET# ME13
DATE 11.21.14	REYNOLDS IRON WORKS, INC. 157 PALMER INDUSTRIAL ROAD WILLIAMSPORT, PA 17701	
SCALE		

Global Detailing, Inc

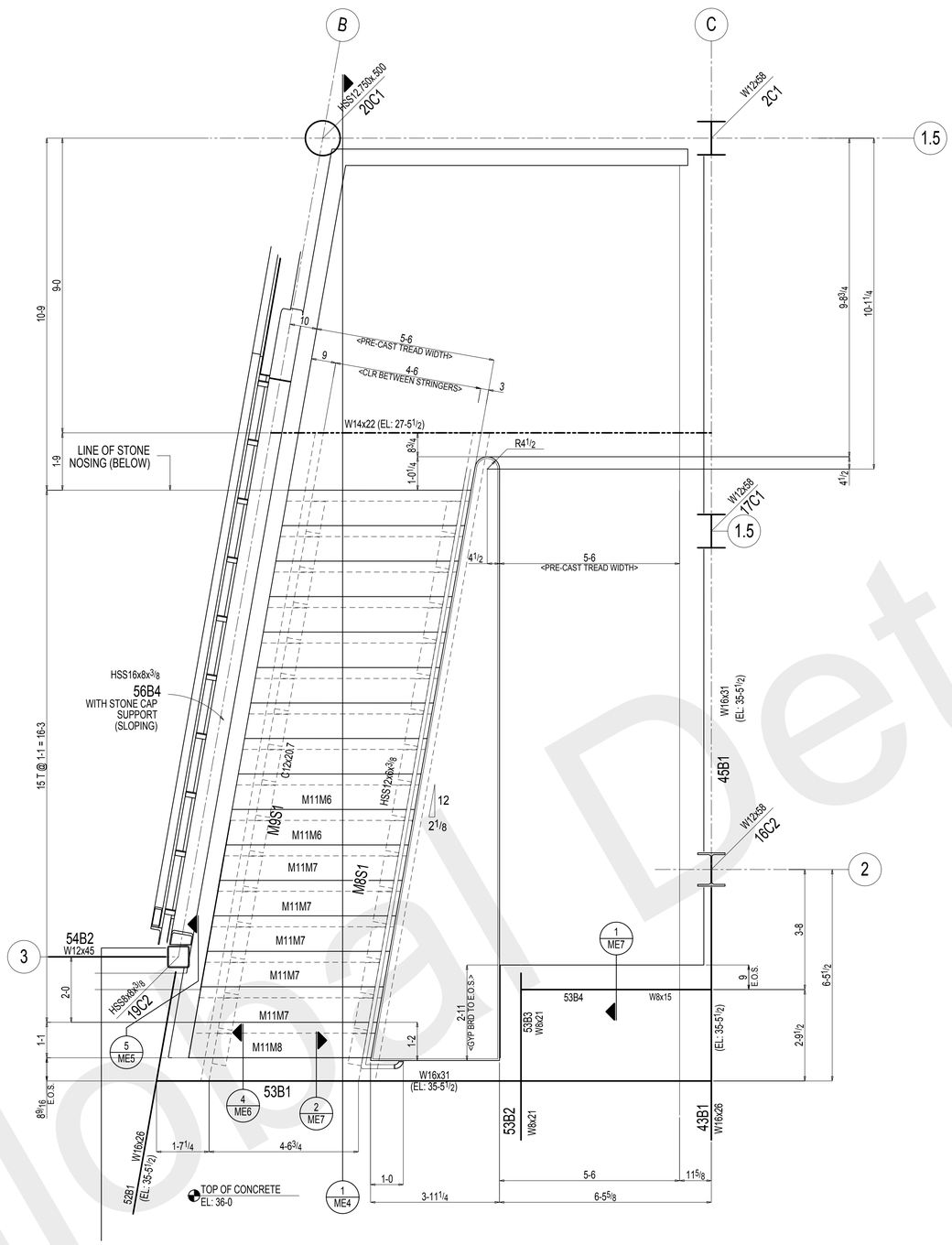

SHOP/FLD NOTE:
RAIL NOT RELEASED
*REQUIRES FLD VERIFICATION

REV	DATE	DESCRIPTION	BY
1	Nov 7 2014	FLD USE - CHASIS ONLY	TDB

REVISIONS

*MATERIAL: A36 UNLESS NOTED OTHERWISE

*HOLES: 13/16 Dia U.N.O.

*WELDING: E70XX OR E7XT-X ALL WELDING MUST BE DONE IN ACCORDANCE WITH A.W.S. D1.1

*BOLTS: 3/4" Dia A325N U.N.O.

*PAINT: SEE DETAILS

*SURFACE PREPARATION: SSPC-SP3

ALFRED UNIVERSITY MUSEUM OF CERAMIC ART
ALFRED, NY

DRAWN BY TDB	MAIN STAIR PLAN	JOB# 14-68
CHK'D. BY -		SHEET# ME2
DATE -	REYNOLDS IRON WORKS, INC. 157 PALMER INDUSTRIAL ROAD WILLIAMSPORT, PA 17701	
SCALE		

Global Detailing, Inc

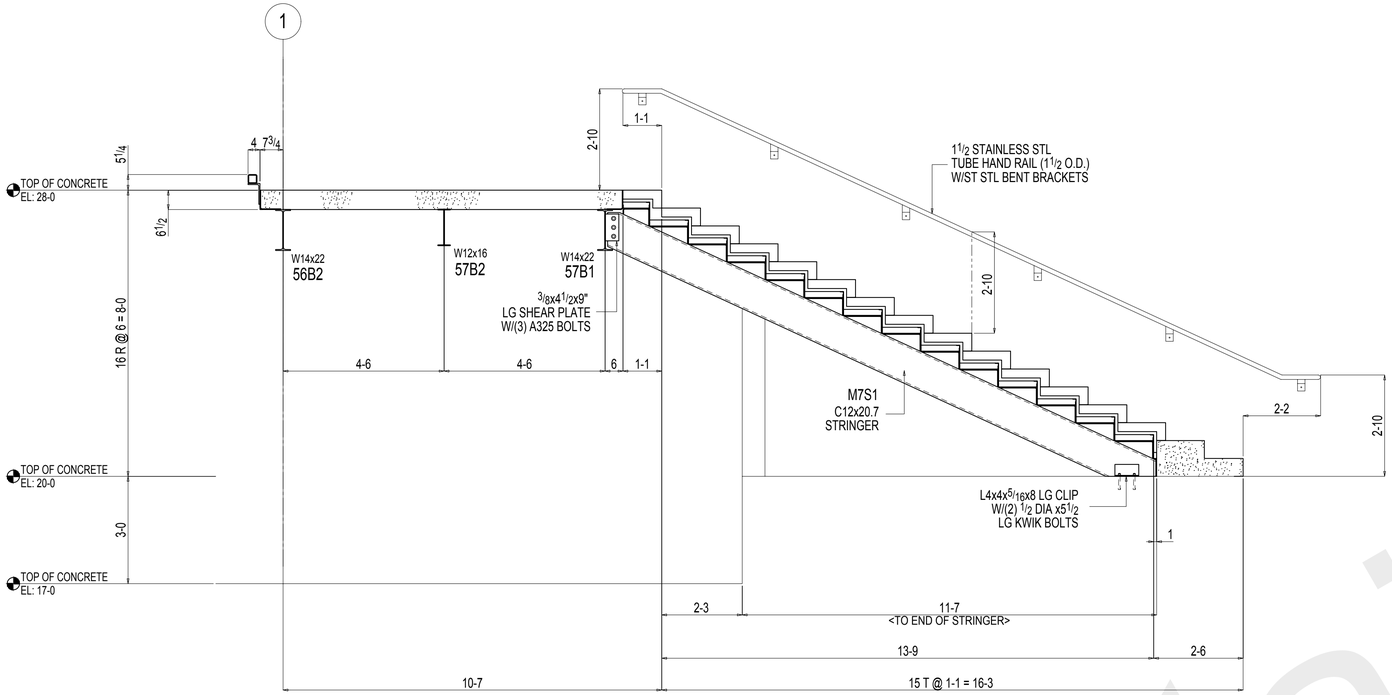

1 ME3 SECTION
REF: A7.02

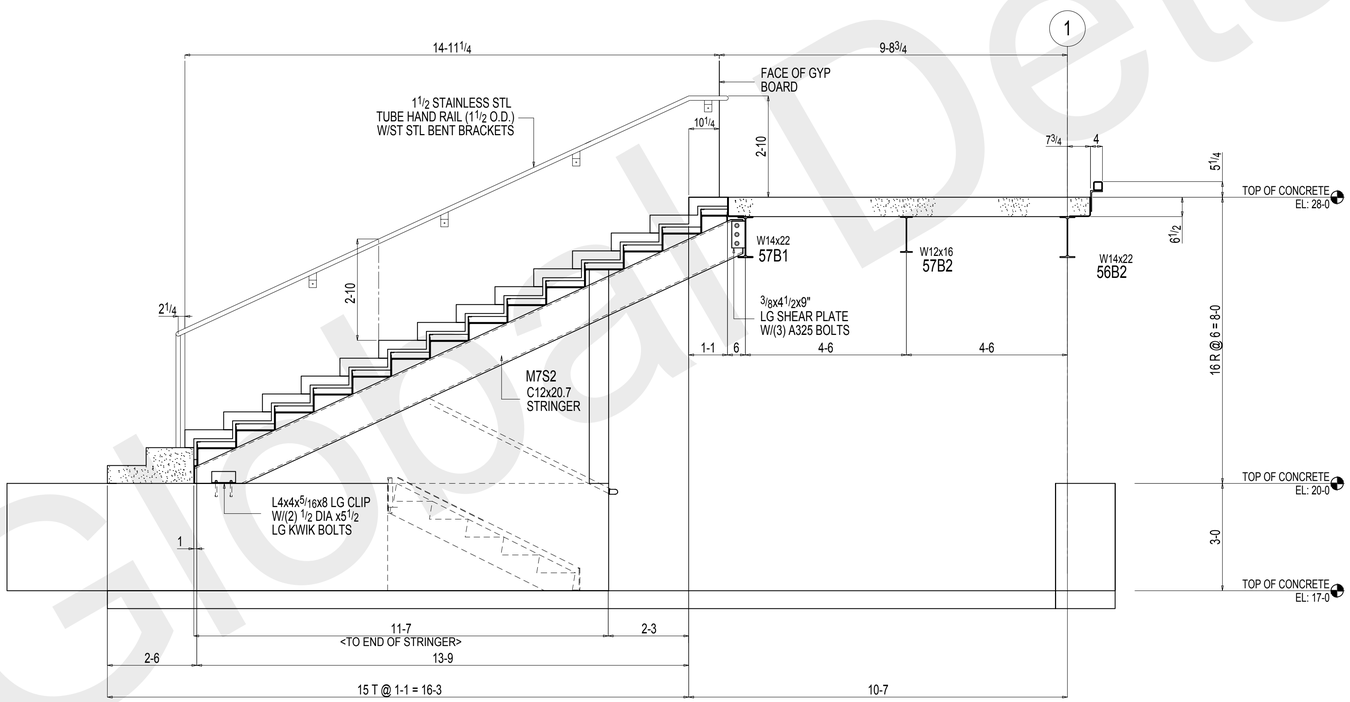

2 ME3 SECTION
REF: A7.02

SHOP/FLD NOTE:
RAIL NOT RELEASED
*REQUIRES FLD VERIFICATION

*MATERIAL: A36 UNLESS NOTED OTHERWISE

*HOLES: 13/16 Dia U.N.O.

*WELDING: E70XX OR E7XT-X ALL WELDING MUST BE DONE IN ACCORDANCE WITH A.W.S. D1.1

*BOLTS: 3/4" Dia A325N U.N.O.

*PAINT: SEE DETAILS

*SURFACE PREPARATION: SSPC-SP3

REV	DATE	DESCRIPTION	BY
1	Nov 7 2014	FLD USE - CHASIS ONLY	TDB

REVISIONS

ALFRED UNIVERSITY MUSEUM OF CERAMIC ART
ALFRED, NY

DRAWN BY TDB	MAIN STAIR ELEVATIONS	JOB# 14-68
CHK'D. BY -		SHEET# ME3
DATE -	REYNOLDS IRON WORKS, INC. 157 PALMER INDUSTRIAL ROAD WILLIAMSPORT, PA 17701	
SCALE		

Global Detailing, Inc

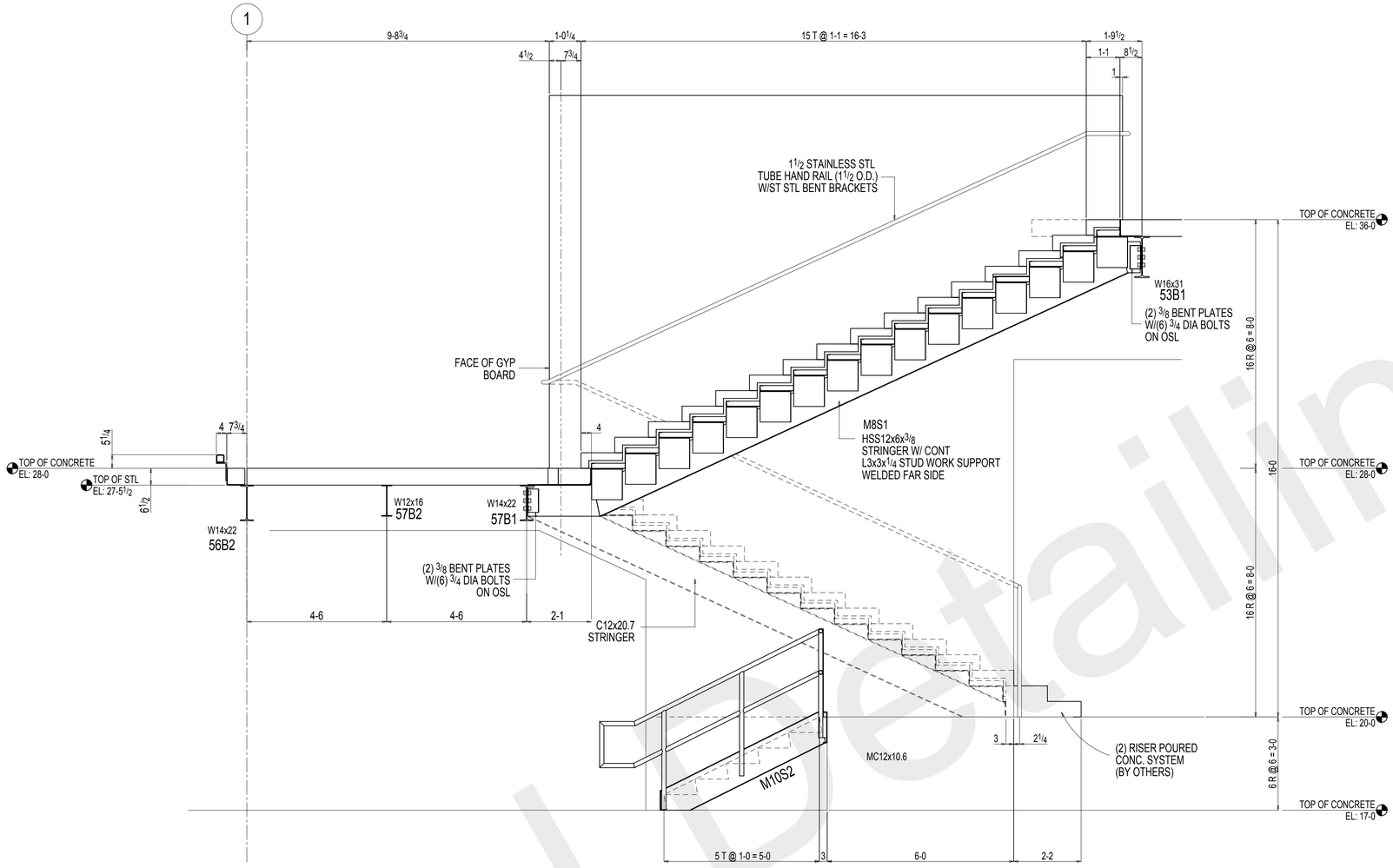

1 / ME4 SECTION
REF: A7.02

SHOP/FLD NOTE:
RAIL NOT RELEASED
*REQUIRES FLD VERIFICATION

*MATERIAL: A36 UNLESS NOTED OTHERWISE

*HOLES: 13/16 Dia U.N.O.

*WELDING: E70XX OR E7XT-X ALL WELDING MUST BE DONE IN ACCORDANCE WITH A.W.S. D1.1

*BOLTS: 3/4" Dia A325N U.N.O.

*PAINT: SEE DETAILS

*SURFACE PREPARATION: SSPC-SP3

REV	DATE	DESCRIPTION	BY
1	Nov 7 2014	FLD USE - CHASIS ONLY	TDB

REVISIONS

ALFRED UNIVERSITY MUSEUM OF CERAMIC ART
ALFRED, NY

DRAWN BY TDB	MAIN STAIR ELEVATION	JOB# 14-68
CHK'D. BY -		SHEET# ME4
DATE -	REYNOLDS IRON WORKS, INC. 157 PALMER INDUSTRIAL ROAD WILLIAMSPORT, PA 17701	
SCALE		

Global Detailing, Inc

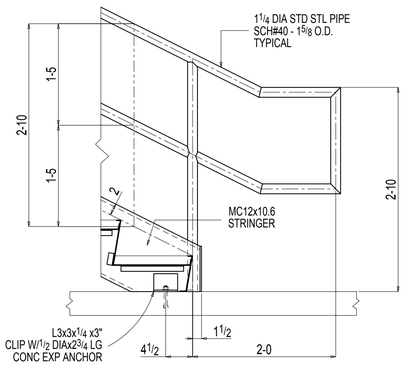

1 ME5 SECTION
REF: -

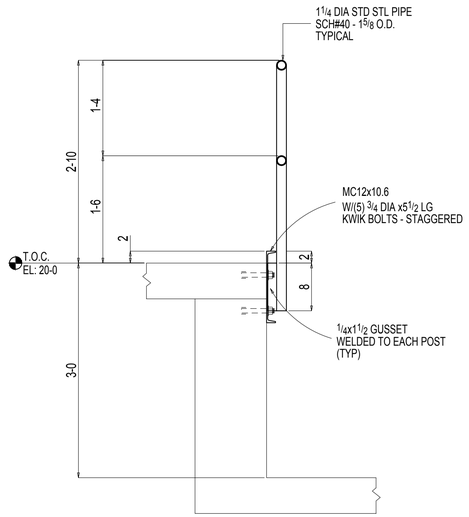

2 ME5 SECTION
REF: -

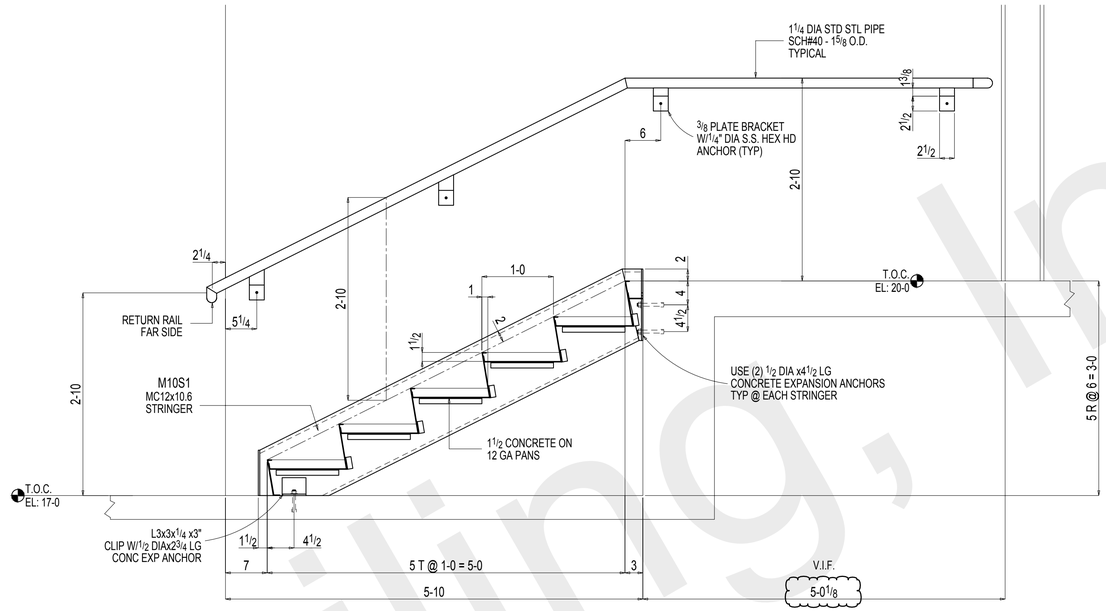

3 ME5 SECTION
REF: -

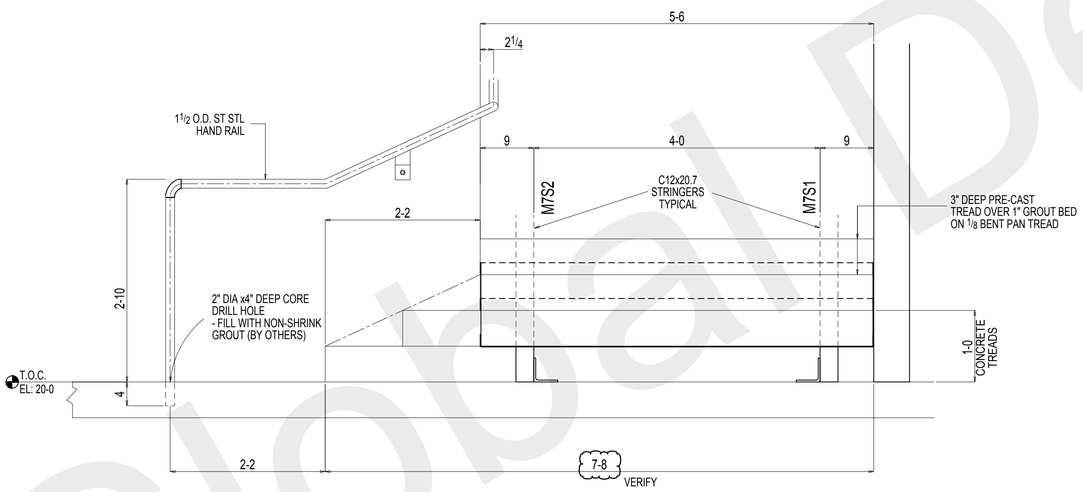

4 ME5 SECTION
REF: -

SHOP/FLD NOTE:
RAIL NOT RELEASED
*REQUIRES FLD VERIFICATION

*MATERIAL: A36 UNLESS NOTED OTHERWISE

*HOLES: 13/16 Dia U.N.O.

*WELDING: E70XX OR E7XT-X ALL WELDING MUST BE DONE IN ACCORDANCE WITH A.W.S. D1.1

*BOLTS: 3/4" Dia A325N U.N.O.

*PAINT: SEE DETAILS

*SURFACE PREPARATION: SSPC-SP3

REV	DATE	DESCRIPTION	BY
1	Nov 7 2014	FLD USE - CHASIS ONLY	TDB

REVISIONS

ALFRED UNIVERSITY MUSEUM OF CERAMIC ART
ALFRED, NY

DRAWN BY TDB
CHK'D. BY -
DATE -
SCALE

MAIN STAIR SECTIONS

JOB# 14-68
SHEET# ME5

REYNOLDS IRON WORKS, INC.
157 PALMER INDUSTRIAL ROAD
WILLIAMSPORT, PA 17701

Global Detailing, Inc

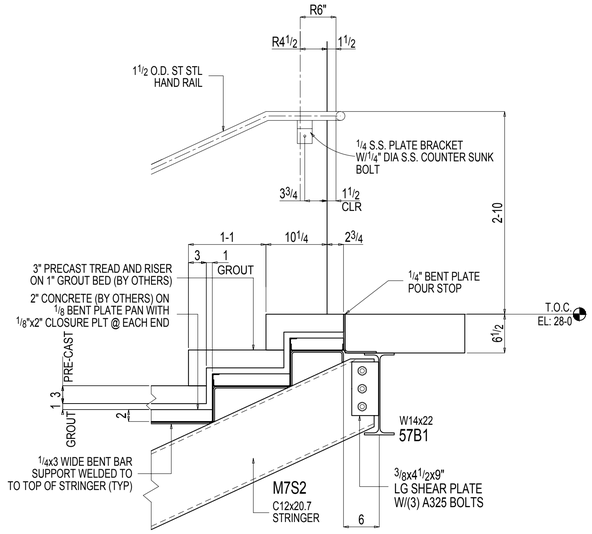

1 / ME6 SECTION
REF:

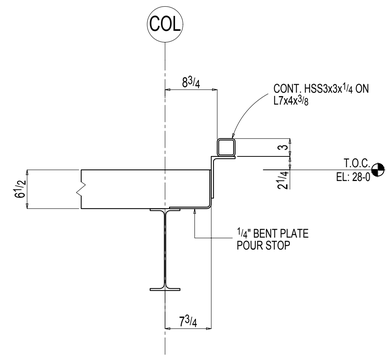

2 / ME6 SECTION
REF: -

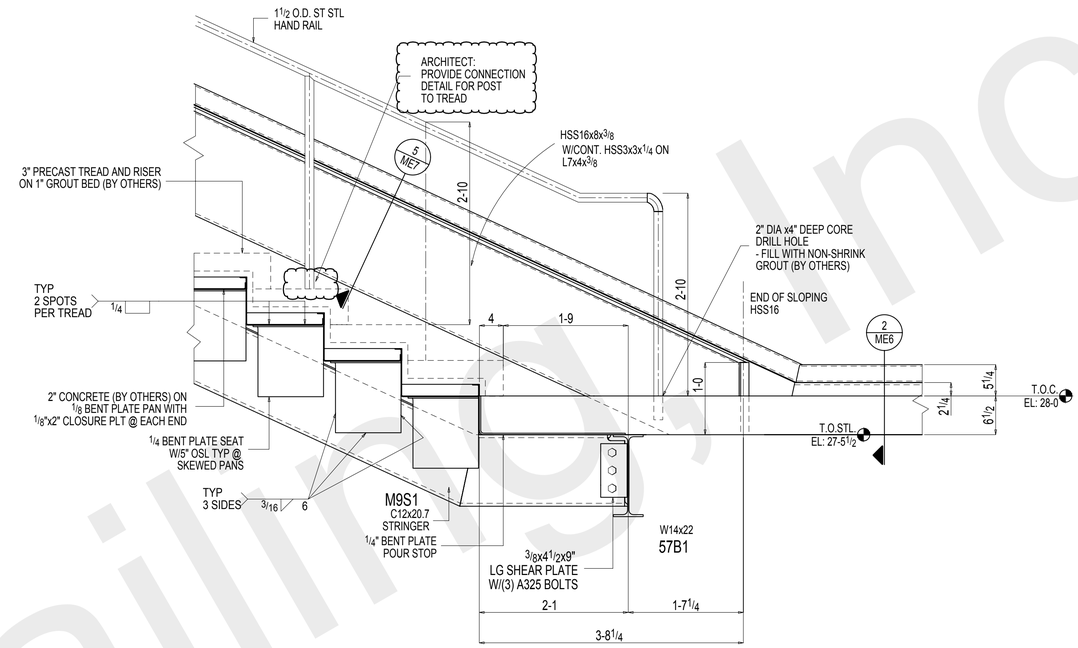

3 / ME6 SECTION
REF: -

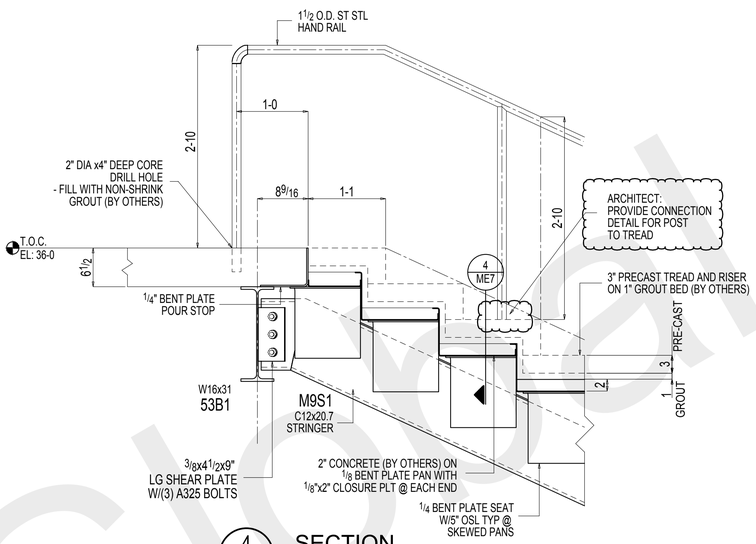

4 / ME6 SECTION
REF: -

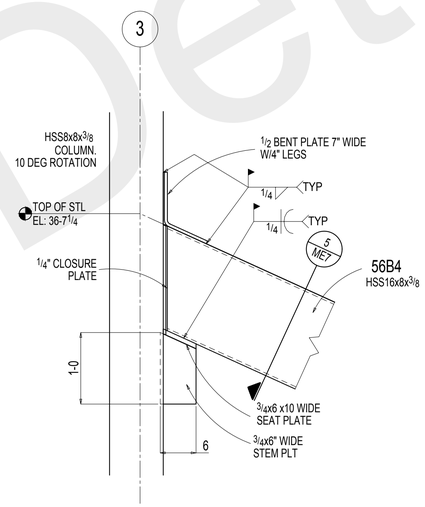

5 / ME5 SECTION
REF: -

SHOP/FLD NOTE:
RAIL NOT RELEASED
*REQUIRES FLD VERIFICATION

*MATERIAL: A36 UNLESS NOTED OTHERWISE

*HOLES: 13/16 Dia U.N.O.

*WELDING: E70XX OR E7XT-X ALL WELDING MUST BE DONE IN ACCORDANCE WITH A.W.S. D1.1

*BOLTS: 3/4" Dia A325N U.N.O.

*PAINT: SEE DETAILS

*SURFACE PREPARATION: SSPC-SP3

REV	DATE	DESCRIPTION	BY
1	Nov 7 2014	FLD USE - CHASIS ONLY	TDB

REVISIONS

ALFRED UNIVERSITY MUSEUM OF CERAMIC ART
ALFRED, NY

DRAWN BY TDB	MAIN STAIR SECTIONS	JOB# 14-68
CHK'D. BY -		SHEET# ME6
DATE -	REYNOLDS IRON WORKS, INC. 157 PALMER INDUSTRIAL ROAD WILLIAMSPORT, PA 17701	
SCALE		

Global Detailing, Inc

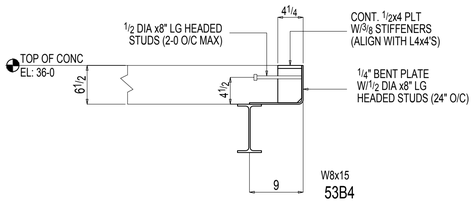

1 / ME7 SECTION
REF: -

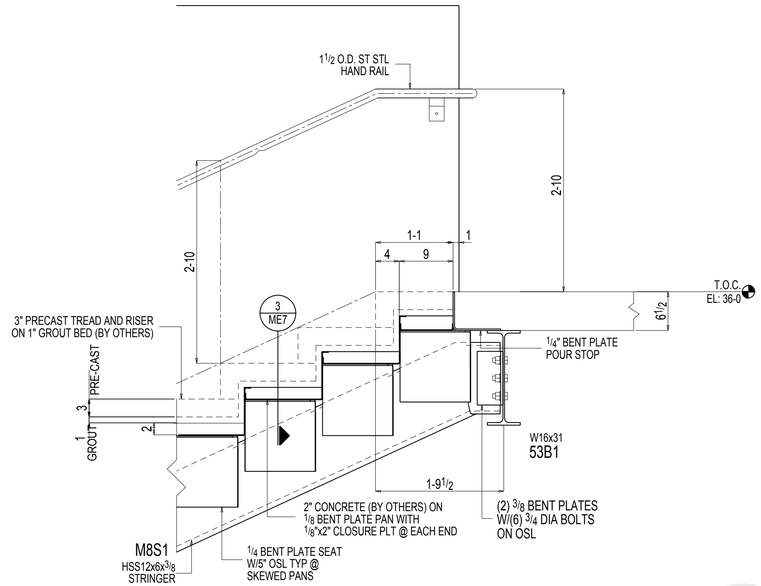

2 / ME7 SECTION
REF: -

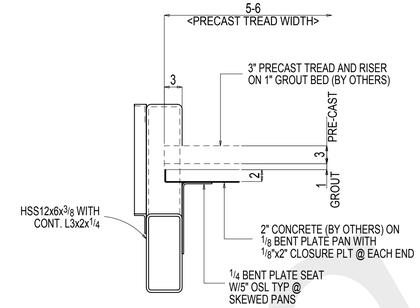

3 / ME7 SECTION
REF: -

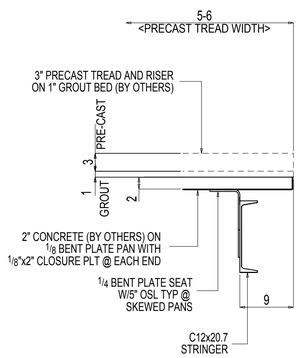

4 / ME7 SECTION
REF:

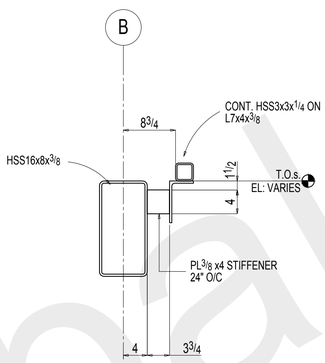

5 / ME7 SECTION
REF:

SHOP/FLD NOTE:
RAIL NOT RELEASED
*REQUIRES FLD VERIFICATION

*MATERIAL:	A36 UNLESS NOTED OTHERWISE
*HOLES:	13/16 Dia U.N.O.
*WELDING:	E70XX OR E7XT-X ALL WELDING MUST BE DONE IN ACCORDANCE WITH A.W.S. D1.1
*BOLTS:	3/4" Dia A325N U.N.O.
*PAINT:	SEE DETAILS
*SURFACE PREPARATION:	SSPC-SP3

REV	DATE	DESCRIPTION	BY
1	Nov 7 2014	FLD USE - CHASIS ONLY	TDB

REVISIONS

ALFRED UNIVERSITY MUSEUM OF CERAMIC ART
ALFRED, NY

DRAWN BY TDB	MAIN STAIR SECTIONS	JOB# 14-68
CHK'D. BY -		SHEET# ME7
DATE -	REYNOLDS IRON WORKS, INC. 157 PALMER INDUSTRIAL ROAD WILLIAMSPORT, PA 17701	
SCALE		

Global Detailing, Inc

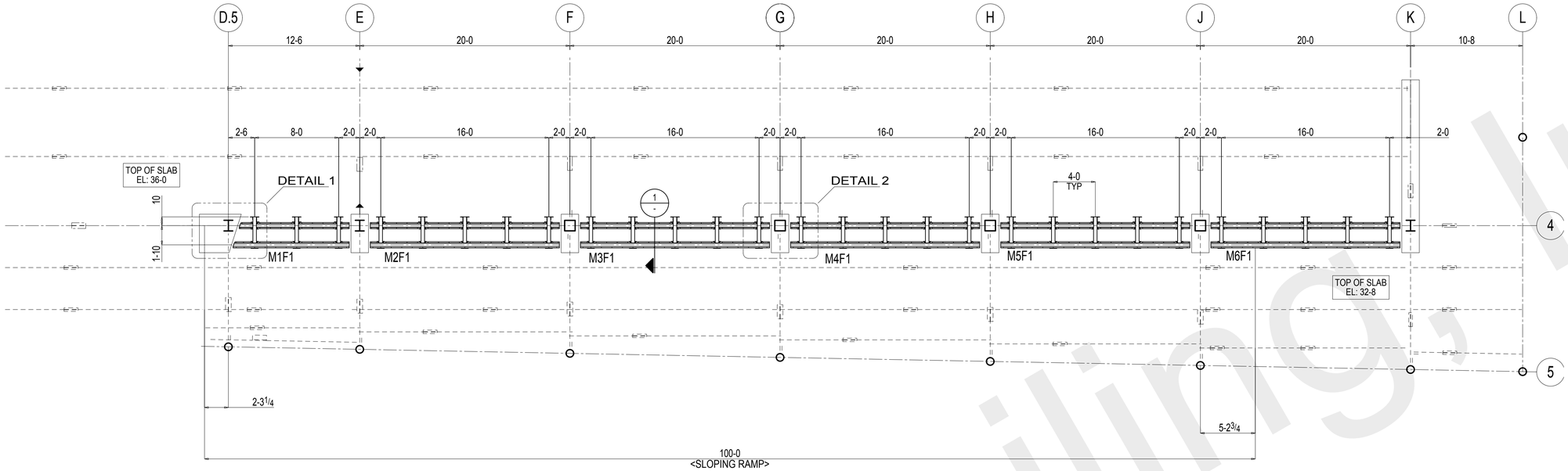

GALLERY DISPLAY SHELF FRAMING PLAN

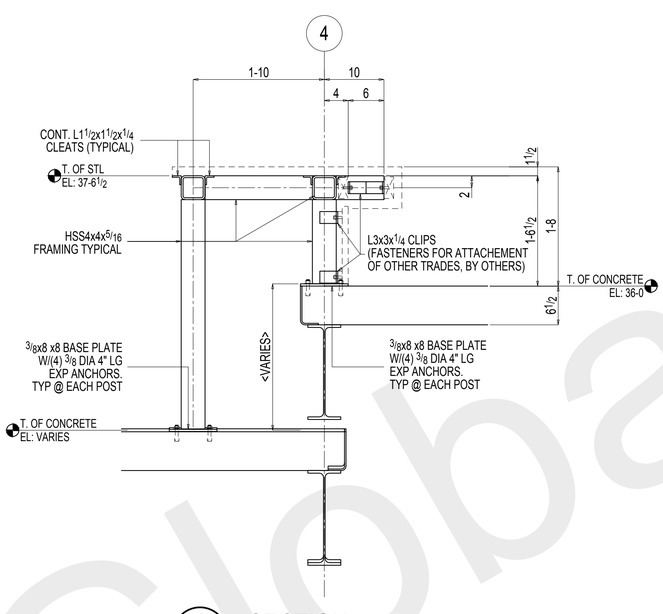

1 / - SECTION
REF:

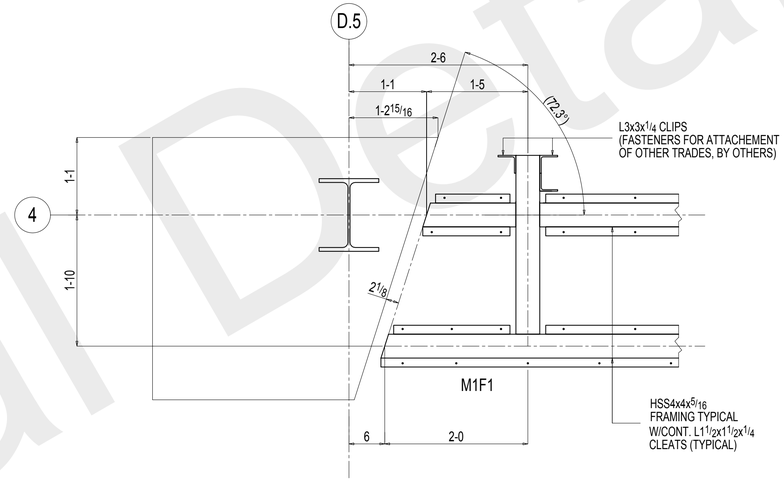

PLAN - DETAIL 1

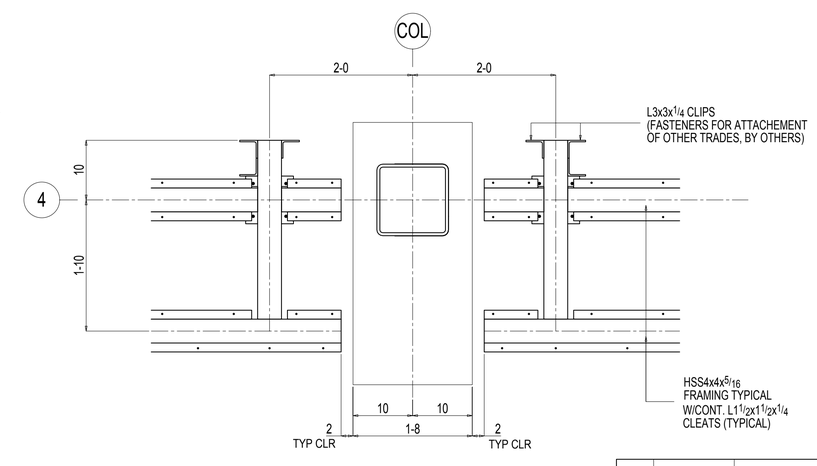

PLAN - DETAIL 2

FLD VERIFY BEFORE FABRICATION

*MATERIAL: A36 UNLESS NOTED OTHERWISE

*HOLES: 13/16 Dia U.N.O.

*WELDING: E70XX OR E7XT-X ALL WELDING MUST BE DONE IN ACCORDANCE WITH A.W.S. D1.1

*BOLTS: 3/4" Dia A325N U.N.O.

*PAINT: SEE DETAILS

*SURFACE PREPARATION: SSPC-SP3

REV	DATE	DESCRIPTION	BY
1	Dec 10 2014	FLD USE	TDB
A	Nov 5 2014	APPROVAL	TDB

REVISIONS

ALFRED UNIVERSITY MUSEUM OF CERAMIC ART
ALFRED, NY

DRAWN BY TDB	GALLERY DISPLAY SHELF	JOB# 14-68
CHK'D. BY -		SHEET# ME8
DATE 11.5.14	REYNOLDS IRON WORKS, INC.	
SCALE	157 PALMER INDUSTRIAL ROAD WILLIAMSPORT, PA 17701	

Global Detailing, Inc

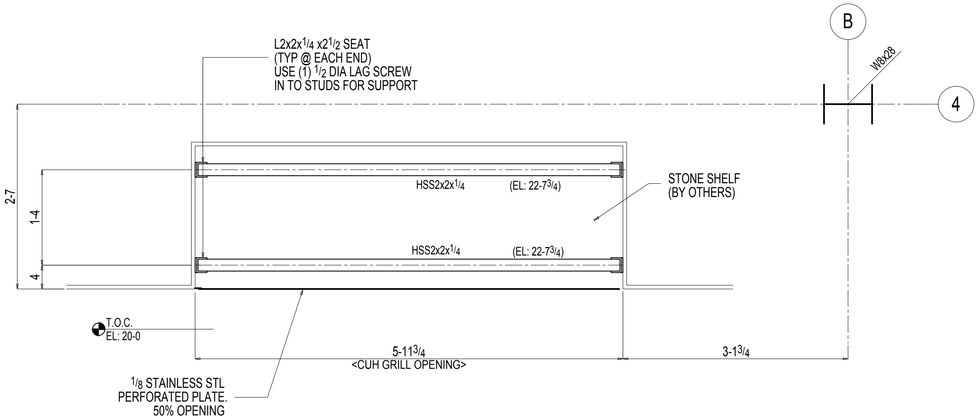

CUH GRILL - PLAN

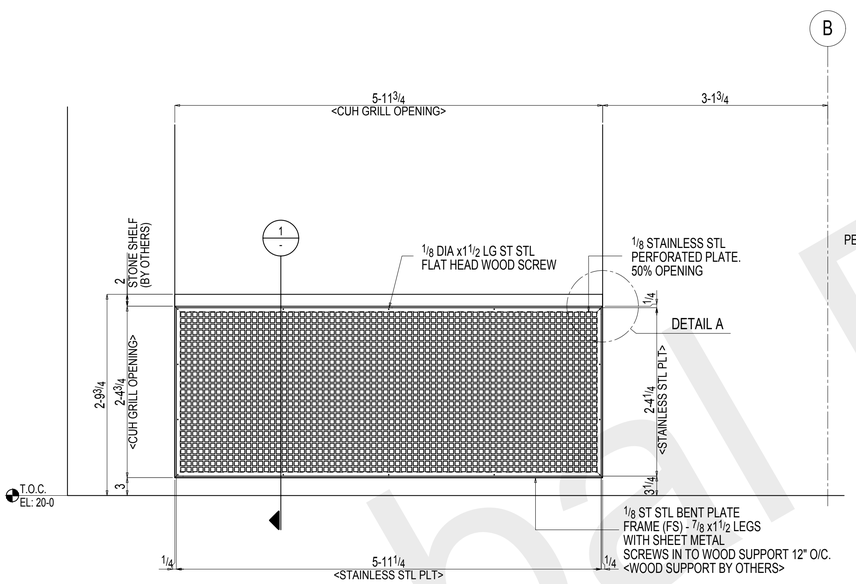

CUH GRILL - ELEVATION

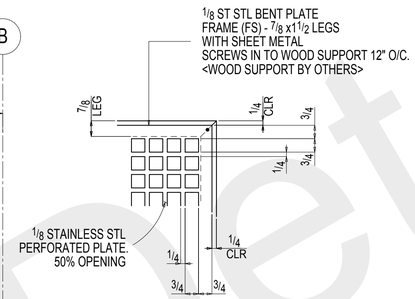

DETAIL A

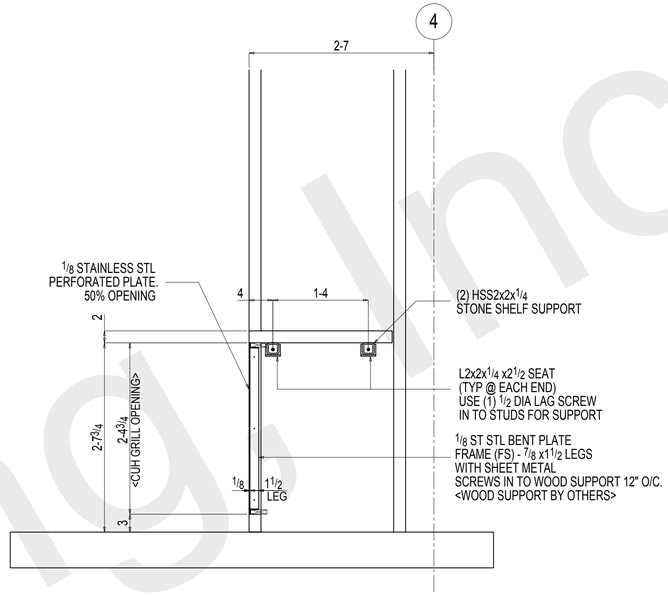

1 SECTION

REF: -

FLD VERIFY BEFORE FABRICATION

*MATERIAL:	A36 UNLESS NOTED OTHERWISE
*HOLES:	13/16 Dia U.N.O.
*WELDING:	E70XX OR E7XT-X ALL WELDING MUST BE DONE IN ACCORDANCE WITH A.W.S. D1.1
*BOLTS:	3/4" Dia A325N U.N.O.
*PAINT:	SEE DETAILS
*SURFACE PREPARATION:	SSPC-SP3

REV	DATE	DESCRIPTION	BY
1	Dec 10 2014	FLD USE	TDB
A	Nov 11 2014	APPROVAL	TDB

REVISIONS

ALFRED UNIVERSITY MUSEUM OF CERAMIC ART
ALFRED, NY

DRAWN BY TDB	CUH ST STL GRILL	JOB# 14-68
CHK'D. BY -		SHEET# ME9
DATE 11.11.14	REYNOLDS IRON WORKS, INC.	
SCALE	157 PALMER INDUSTRIAL ROAD WILLIAMSPORT, PA 17701	

Global Detailing, Inc