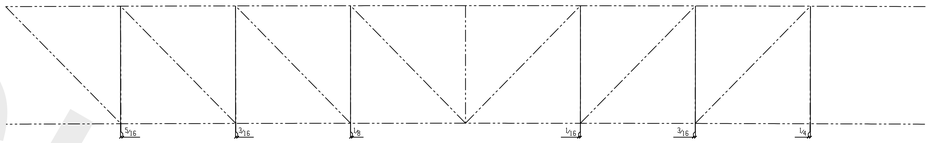

TRUSS 2T1 SCHEMATIC

## BILL OF MATERIAL

| LIFT NO. | LIFT QTY. | NO. OF PIECES | PIECE MARK | MATERIAL | LENGTH FT. | LENGTH IN. | REMARKS | WEIGHT TOTAL |
|---|---|---|---|---|---|---|---|---|
| | | 2 | 2T1 | TRUSS | | | | 25635 |
| | | 2 | w77 | W8x58 | 59 | 1 3/8 | C=3/4 CAMBER A572-50 | 6840 |
| | | 4 | a67 | L4x4x3/8 | 1 | 9 | A572-50 | 104 |
| | | 4 | a65 | L4x4x3/8 | 0 | 5 3/4 | A572-50 | 28 |
| | | 2 | p112 | PL1x30 | 3 | 1 | A572-50 | 605 |
| | | 2 | p151 | PL1x26 | 2 | 9 1/2 | A572-50 | 465 |
| | | 2 | p139 | PL1x26 | 2 | 8 | A572-50 | 447 |
| | | 2 | p148 | PL1x25 | 2 | 6 1/4 | A572-50 | 384 |
| | | 2 | p153 | PL1x16 | 2 | 0 | A572-50 | 206 |
| | | 4 | p159 | PL1x16 | 2 | 0 | A572-50 | 412 |
| | | 2 | p161 | PL1x8 | 1 | 8 | A572-50 | 91 |
| | | 2 | w1129 | W8x58 | 58 | 3 1/16 | C=3/4 CAMBER/PREP A572-50 | 6751 |
| | | 2 | p125 | PL1x30 | 3 | 1 1/4 | A572-50 | 610 |
| | | 2 | p150 | PL1x26 | 2 | 9 1/2 | A572-50 | 465 |
| | | 2 | p152 | PL1x26 | 2 | 9 1/2 | A572-50 | 465 |
| | | 2 | p142 | PL1x26 | 2 | 9 3/8 | A572-50 | 459 |
| | | 2 | p141 | PL1x26 | 2 | 9 | A572-50 | 456 |
| | | 2 | p160 | PL1x20 | 3 | 11 1/4 | A572-50 | 508 |
| | | 2 | p156 | PL1x16 | 2 | 0 | A572-50 | 206 |
| | | 8 | p208 | PL1/2x7 | 0 | 8 | A572-50 | 63 |
| | | 2 | a133 | L5x5x3/4 | 7 | 3 3/8 | A572-50 | 343 |
| | | 2 | a132 | L5x5x3/4 | 7 | 3 3/8 | A572-50 | 344 |
| | | 2 | a134 | L5x5x3/8 | 8 | 3 3/8 | A572-50 | 331 |
| | | 2 | a129 | L5x5x3/8 | 8 | 3 3/8 | A572-50 | 331 |
| | | 2 | a136 | L4x4x1/2 | 7 | 10 5/8 | A572-50 | 202 |
| | | 2 | a72 | L4x4x1/2 | 7 | 10 5/8 | A572-50 | 202 |
| | | 4 | a137 | L3 1/2x3 1/2x1/2 | 8 | 1 5/8 | A572-50 | 361 |
| | | 4 | a73 | L3 1/2x3 1/2x1/2 | 8 | 1 5/8 | A572-50 | 361 |
| | | 2 | a128 | L4x4x1/2 | 8 | 4 5/8 | A572-50 | 215 |
| | | 2 | a74 | L4x4x1/2 | 8 | 4 5/8 | A572-50 | 215 |

## BILL OF MATERIAL

| LIFT NO. | LIFT QTY. | NO. OF PIECES | PIECE MARK | MATERIAL | LENGTH FT. | LENGTH IN. | REMARKS | WEIGHT TOTAL |
|---|---|---|---|---|---|---|---|---|
| | | 2 | a127 | L5x5x5/8 | 8 | 4 3/8 | A572-50 | 335 |
| | | 2 | a75 | L5x5x5/8 | 8 | 4 3/8 | A572-50 | 335 |
| | | 2 | a106 | L5x5x5/8 | 5 | 7 1/2 | A572-50 | 225 |
| | | 2 | a43 | L5x5x5/8 | 5 | 7 1/2 | A572-50 | 225 |
| | | 2 | a135 | L5x5x1/2 | 5 | 5 | A572-50 | 175 |
| | | 2 | a46 | L5x5x1/2 | 5 | 5 | A572-50 | 176 |
| | | 2 | a103 | L4x4x1/2 | 5 | 2 1/2 | A572-50 | 133 |
| | | 2 | a47 | L4x4x1/2 | 5 | 2 1/2 | A572-50 | 133 |
| | | 2 | a138 | L4x4x3/8 | 5 | 10 1/2 | A572-50 | 184 |
| | | 2 | a78 | L4x4x3/8 | 5 | 10 1/2 | A572-50 | 184 |
| | | 2 | a108 | L4x4x1/2 | 5 | 5 | A572-50 | 139 |
| | | 2 | a59 | L4x4x1/2 | 5 | 5 | A572-50 | 139 |
| | | 2 | a110 | L5x5x1/2 | 5 | 7 1/2 | A572-50 | 182 |
| | | 2 | a53 | L5x5x1/2 | 5 | 7 1/2 | A572-50 | 182 |
| | | 2 | a112 | L5x5x5/8 | 5 | 2 1/2 | A572-50 | 208 |
| | | 2 | a55 | L5x5x5/8 | 5 | 2 1/2 | A572-50 | 208 |
| | | | | | | | | |
| | | | | FIELD BOLTS | | | | |
| | | 8 | | 1 Dia A490N | 0 | 3 1/2 | 1HD WASH | |
| | | 12 | | 1 Dia A490N | 0 | 3 | 1HD WASH | |
| | | 24 | | 1 Dia A325N | 0 | 3 | 1HD WASH | |
| | | 16 | | 3/4 Dia A325N | 0 | 2 | 1HD WASH | |
| | | | | | | | | |
| | | | | | | | | |
| | | | | | | | | |
| | | | | | | | | |
| | | | | | | | | |
| | | | | | | | | |
| | | | | | | | | |
| | | | | | | | | |
| | | | | | | | | |
| | | | | | | | | |

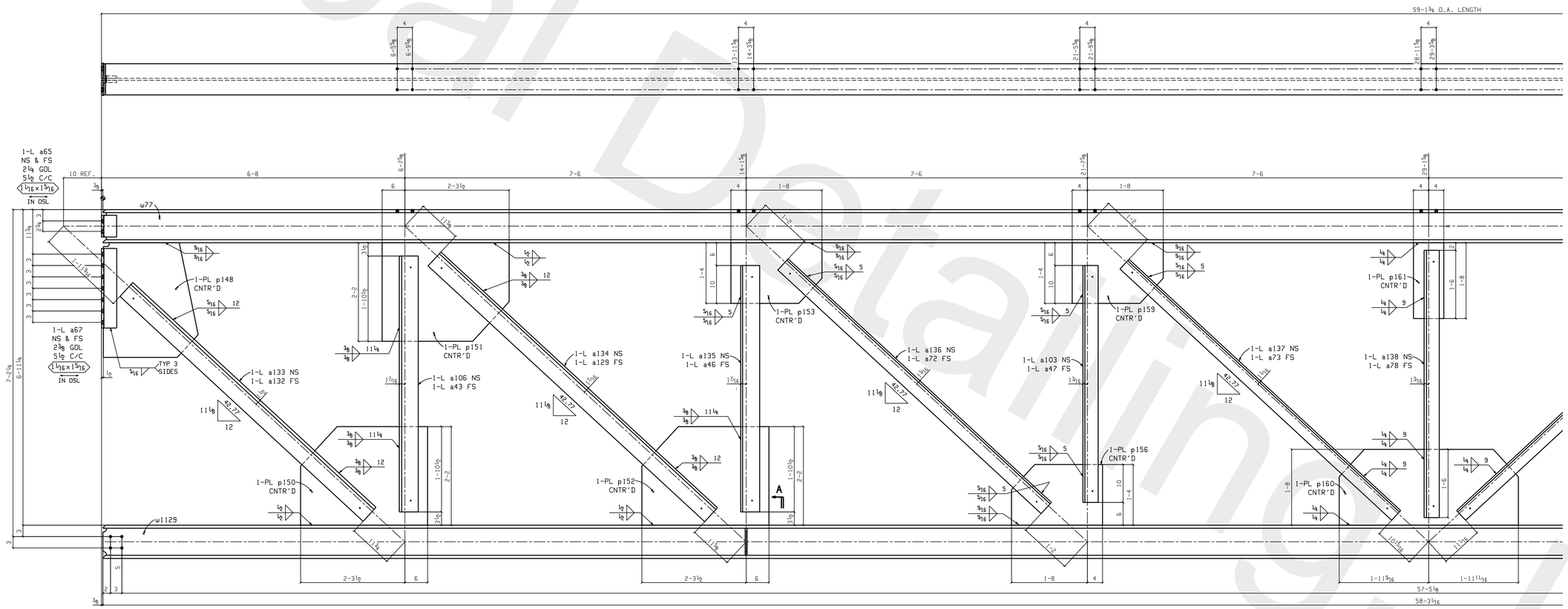


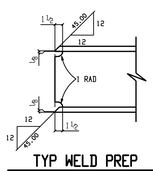


TYP WELD PREP

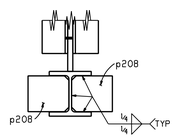


Section A-A
2T1

MATCHLINE SHEET 2T1a

MATCHLINE SHEET 2T1b

2 TRUSSES 2T1

HOLES: 13/16" DIA U.N.O.
SURFACE PREP: SSPC-SP 2
FINISH: 1 SHOP COAT PPG COATING 94-232
ELECTRODES: E70XX-(LOW HYDROGEN)

GENERAL NOTES:

ALL DIMENSIONS FROM END OF MAIN MATERIAL UNLESS NOTED.
ALL VERTICAL SPACING OF HOLES TO BE 3" UNLESS NOTED.
ALL COPES TO HAVE 1/2" MINIMUM RADIUS.
CHARGES FOR CORRECTIVE WORK WILL NOT BE HONORED UNLESS PREVIOUS APPROVAL IS OBTAINED FROM JEFFORDS STEEL AND ENGINEERING COMPANY
MEMBERS ARE TO BE ERECTED SO THAT MARKED END IS IN THE SAME LOCATION AS ON THE E DWG
ON SHOP BOLTED CLIP ANGLES ON BEAMS: ON PC MARK END, INSERT SHOP BOLTS SO THE HEAD OF THE BOLT IS ON THE NEAR SIDE OF BEAM. IN THE NON-PC MARK END, INSERT BOLTS SO THE HEAD OF THE BOLT IS ON THE FAR SIDE OF BEAM.

DRAWINGS PREPARED BY, GLOBAL DETAILING, INC. JOB # 11-390

| print record | | | | |
|---|---|---|---|---|
| 1 | APP | 1-6 | | |
| 1 | FAB | 1-27 | | |

job no. 4474-1000
date 1-4-12
drawn by MC
check by QB

| revisions | | |
|---|---|---|
| rev# | date | description |

STEEL AND ENGINEERING COMPANY
P.O. BOX 45-328 ROUTE 422
PLATTSBURGH, N.Y. 12901
518-561-4061

customer
LORAN CONSTRUCTION INC
286 STATE HIGHWAY 37
HOGANSBURG, NY

project
AKWESASNE MOHAWK CASINO
873 STATE HIGHWAY 37
AKWESASNE, NY

sheet
2T1a

Global Detailing, Inc.

## BILL OF MATERIAL

| LIFT NO. | LIFT QTY. | NO. OF PIECES | PIECE MARK | MATERIAL | LENGTH FT. | LENGTH IN. | REMARKS | WEIGHT TOTAL |
|---|---|---|---|---|---|---|---|---|

## BILL OF MATERIAL

| LIFT NO. | LIFT QTY. | NO. OF PIECES | PIECE MARK | MATERIAL | LENGTH FT. | LENGTH IN. | REMARKS | WEIGHT TOTAL |
|---|---|---|---|---|---|---|---|---|

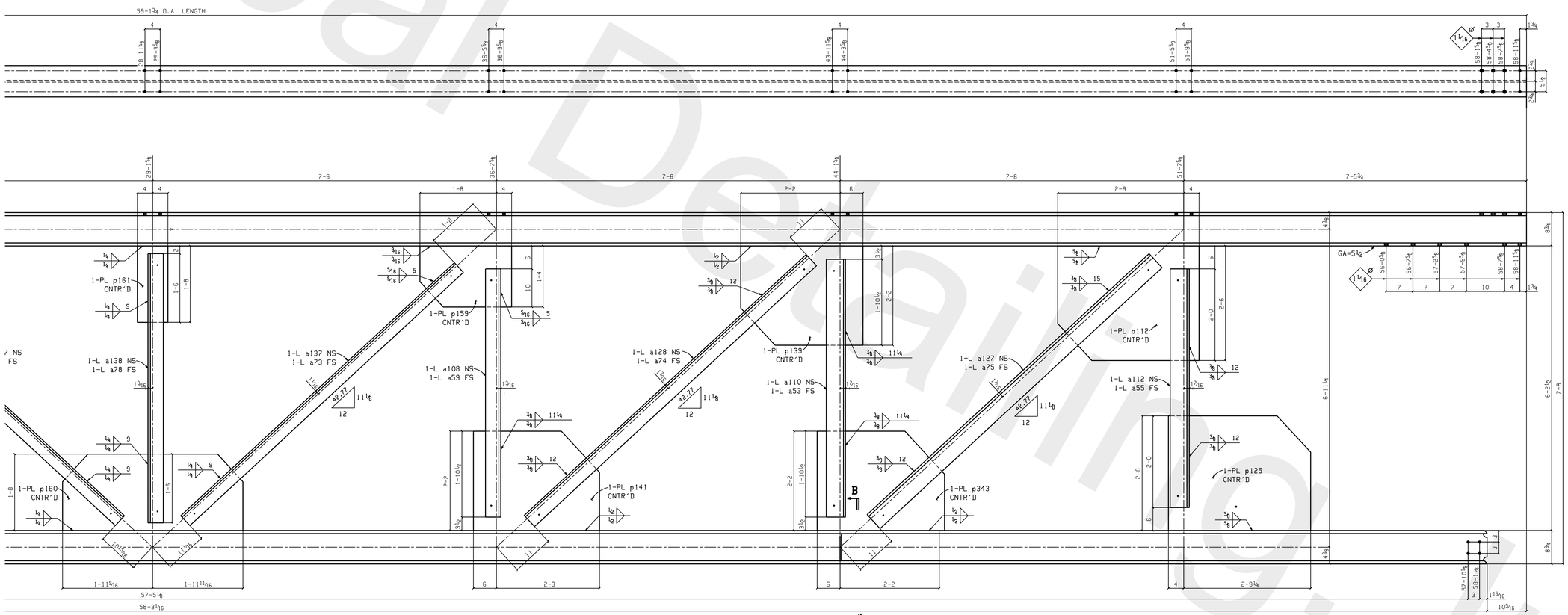


MATCHLINE SHEET 2T1a

MATCHLINE SHEET 2T1b

2 TRUSSES 2T1

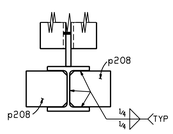


Section B-B

2T1

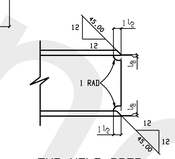


TYP WELD PREP

HOLES: $13/16$" DIA U.N.O.
SURFACE PREP: SSPC-SP 2
FINISH: **1 SHOP COAT PPG COATING 94-232**
ELECTRODES: E70XX-(LOW HYDROGEN)

GENERAL NOTES:

ALL DIMENSIONS FROM END OF MAIN MATERIAL UNLESS NOTED.
ALL VERTICAL SPACING OF HOLES TO BE 3" UNLESS NOTED.
ALL COPES TO HAVE ½" MINIMUM RADIUS.
CHARGES FOR CORRECTIVE WORK WILL NOT BE HONORED UNLESS PREVIOUS APPROVAL IS OBTAINED FROM JEFFORDS STEEL AND ENGINEERING COMPANY

MEMBERS ARE TO BE ERECTED SO THAT MARKED END IS IN THE SAME LOCATION AS ON THE E DWG

ON SHOP BOLTED CLIP ANGLES ON BEAMS: ON PC MARK END, INSERT SHOP BOLTS SO THE HEAD OF THE BOLT IS ON THE NEAR SIDE OF BEAM. IN THE NON-PC MARK END, INSERT BOLTS SO THE HEAD OF THE BOLT IS ON THE FAR SIDE OF BEAM.

DRAWINGS PREPARED BY, GLOBAL DETAILING, INC. JOB # 11-390

| print record | | |
|---|---|---|
| 1 | APP | 1-6 |
| 1 | FAB | 1-27 |

job no. 4974-1000
date 1-4-12
drawn by MC
check by QB

| revisions | | |
|---|---|---|
| rev# | date | description |

JEFFORDS
STEEL AND ENGINEERING COMPANY
P.O. BOX 4438-398 ROUTE 422
PLATTSBURGH, N.Y. 12901
518-561-4061

customer
LORAN CONSTRUCTION INC
286 STATE HIGHWAY 37
HOGANSBURG, NY

project
AKWESASNE MOHAWK CASINO
873 STATE HIGHWAY 37
AKWESASNE, NY

sheet
2T1b

Global Detailing, Inc.

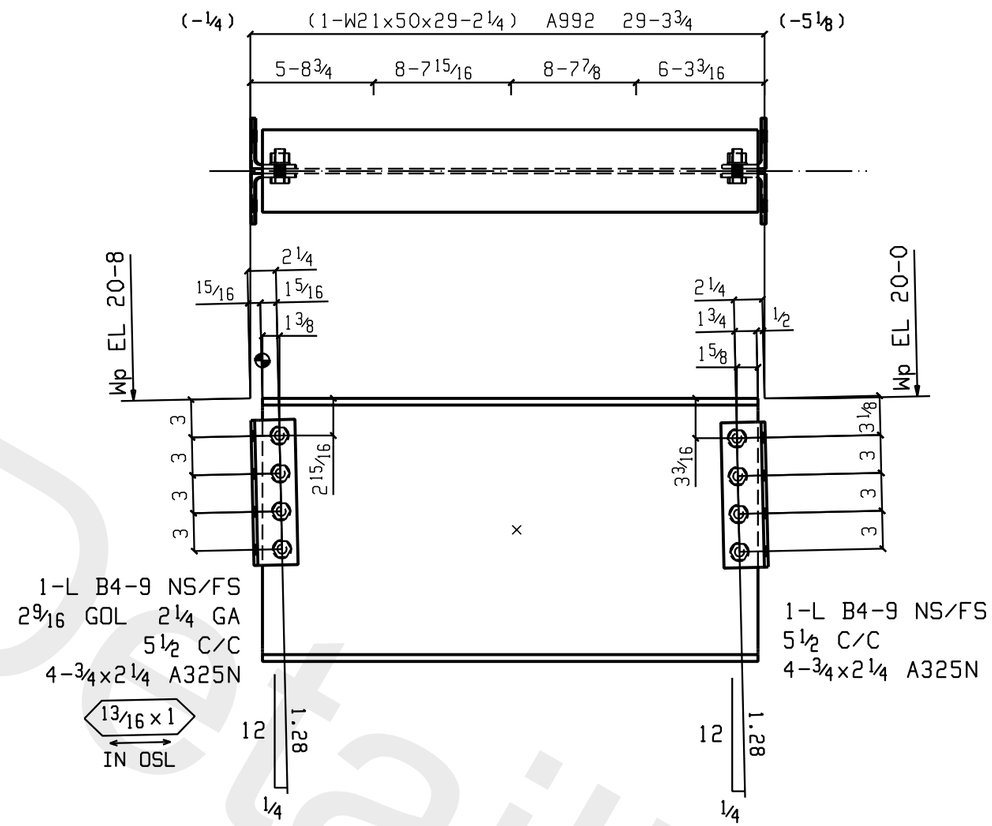


# ONE BEAM 1B113

| | |
|---|---|
| W | 20 13/16 x 3/8 |
| F | 6 1/2 x 9/16 |
| K | 1 1/4 x 7/8 |

## BILL OF MATERIAL

| LIFT NO. | LIFT QTY. | NO. OF PIECES | PIECE MARK | MATERIAL | LENGTH FT. | LENGTH IN. | REMARKS | WEIGHT TOTAL |
|---|---|---|---|---|---|---|---|---|
| 1 | 1 | ONE | 1B113 | BEAM | | | | 1494 |
| | | 1 | 1B113 | W21x50 | 29 | 2 1/4 | A992 | 1459 |
| | | 4 | B4-9 | L4x3 1/2x5/16 | 0 | 11 1/2 | A572-50 | 30 |
| | | 8 | | 3/4 Dia A325N | 0 | 2 1/4 | 1HD WASH | 5 |
| | | | | | | | | |
| | | | | FIELD BOLTS | | | | |
| | | 1 | | 3/4 Dia A325N | 0 | 2 1/2 | 1HD WASH | |
| | | 14 | | 3/4 Dia A325N | 0 | 2 1/4 | 1HD WASH | |
| | | 2 | | 3/4 Dia A325N | 0 | 2 | 1HD WASH | 1494 |

HOLES: 13/16" DIA U.N.O.
SURFACE PREP: SSPC-SP 2
FINISH: **PPG COATING 94-232**
ELECTRODES: E70XX-(LOW HYDROGEN)

GENERAL NOTES:

ALL DIMENSIONS FROM END OF MAIN MATERIAL U/N.
ALL VERTICAL SPACING OF HOLES TO BE 3" U/N.
ALL COPES TO HAVE 1/2" MINIMUM RADIUS.

CHARGES FOR CORRECTIVE WORK WILL NOT BE HONORED UNLESS PREVIOUS APPROVAL IS OBTAINED FROM JEFFORDS STEEL AND ENGINEERING COMPANY.

MEMBERS ARE TO BE ERECTED SO THAT MARKED END IS IN THE SAME LOCATION AS ON THE ERECTION DRAWING.

ON SHOP BOLTED CLIP ANGLES ON BEAMS: ON PIECE MARK END, INSERT SHOP BOLTS SO THE HEAD OF THE BOLT IS ON THE NEAR SIDE OF BEAM. ON THE NON-PIECE MARK END, INSERT BOLTS SO THE HEAD OF THE BOLT IS ON THE FAR SIDE OF BEAM.

REVISIONS

| rev# | date | description |
|---|---|---|
| | | |

| | |
|---|---|
| job no. | 4497 |
| date | Feb 21 201 |
| drawn by | TC |
| checked by | GD |

PRINT RECORD

| | | |
|---|---|---|
| APP-1-6 | | |
| FAB 2-21 | | |

DRAWINGS PREPARED BY,
GLOBAL DETAILING, INC.
JOB # 11-390

customer
ENCOMPASS DEVELOP
DESIGN CONSTRUCTION

Jeffords
STEEL AND ENGINEERING COMPANY
P.O. BOX 40-4398 ROUTE #22
PLATTSBURGH, N.Y 12901
518-561-4061

project
AKWESASNE MOHAWK
CASINO
873 STATE HIGHWAY 37
AKWESASNE, NY

1B113

Global Detailing Inc

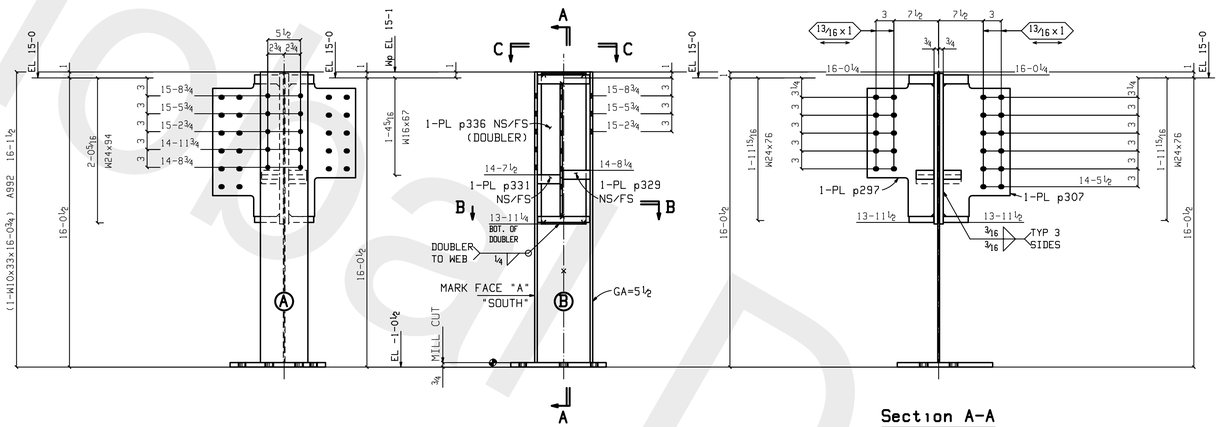


## Section A-A

11C15

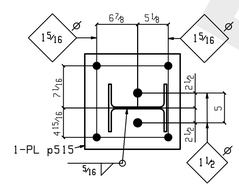


## ONE COLUMN 11C15

| | |
|---|---|
| W | 9 3/4 x 5/16 |
| F | 7 15/16 x 7/16 |
| K | 1 1/8 x 13/16 |

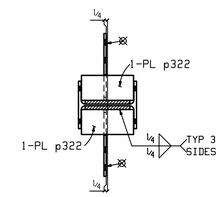


## Section C-C

11C15

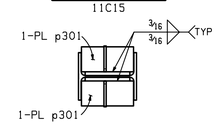


## Section B-B

11C15

DRAWINGS PREPARED BY,
GLOBAL DETAILING, INC.
JOB # 12-396

## BILL OF MATERIAL

| LIFT NO. | LIFT QTY. | NO. OF PIECES | PIECE MARK | MATERIAL | LENGTH FT. | LENGTH IN. | REMARKS | WEIGHT TOTAL |
|---|---|---|---|---|---|---|---|---|
| 11 | 1 | ONE | 11C15 | COLUMN | | | | 765 |
| | | 1 | 11C15 | W10x33 | 16 | 0 3/4 | MIE A992 | 529 |
| | | 2 | p322 | PL1 1/2x4 3/16 | 0 | 8 3/4 | A572-50 | 31 |
| | | 2 | p329 | PL1 1/2x3 | 0 | 4 5/8 | A572-50 | 12 |
| | | 2 | p331 | PL1 1/2x3 | 0 | 3 13/16 | A572-50 | 10 |
| | | 2 | p301 | PL1x4 3/16 | 0 | 8 3/4 | A572-50 | 21 |
| | | 1 | p515 | PL3/4x16 | 1 | 4 | A572-50 | 53 |
| | | 2 | p336 | PL5/8x7 1/2 | 2 | 1 1/4 | A572-50 | 67 |
| | | 1 | p297 | PL3/8x11 3/16 | 1 | 10 1/4 | A572-50 | 20 |
| | | 1 | p307 | PL3/8x11 3/16 | 1 | 10 1/4 | A572-50 | 23 |
| | | | | | | | Total weight : | |

HOLES: 13/16" DIA U.N.O.
SURFACE PREP: SSPC-SP 3
FINISH: **NONE**
ELECTRODES: E70XX-(LOW HYDROGEN)

GENERAL NOTES:

ALL DIMENSIONS FROM END OF MAIN MATERIAL UNLESS NOTED.
ALL VERTICAL SPACING OF HOLES TO BE 3" UNLESS NOTED.
ALL COPES TO HAVE 1/2" MINIMUM RADIUS.
CHARGES FOR CORRECTIVE WORK WILL NOT BE HONORED UNLESS PREVIOUS APPROVAL IS OBTAINED FROM JEFFORDS STEEL AND ENGINEERING COMPANY
MEMBERS ARE TO BE ERECTED SO THAT MARKED END IS IN THE SAME LOCATION AS ON THE E DWG
ON SHOP BOLTED CLIP ANGLES ON BEAMS: ON PC MARK END, INSERT SHOP BOLTS SO THE HEAD OF THE BOLT IS ON THE NEAR SIDE OF BEAM. IN THE NON-PC MARK END, INSERT BOLTS SO THE HEAD OF THE BOLT IS ON THE FAR SIDE OF BEAM.

print record

| | | | | |
|---|---|---|---|---|
| 1 | TAB | 1.17.12 | | |

job no. 1693
date Jan 14 2015
drawn by MC
checked by GM

revisions

| rev# | date | description |
|---|---|---|


Jeffords
STEEL AND ENGINEERING COMPANY
P.O. BOX 40-1338 ROUTE #22
PLATTSBURGH, N.Y. 12901
518-561-4061


customer
ENCOMPASS DEVELOP
DESIGN CONSTRUCTION

project
AKWESASNE MOHAWK
HOTEL
873 STATE HIGHWAY 37
AKWESASNE NY

sheet
11C15

Global Detailing Inc

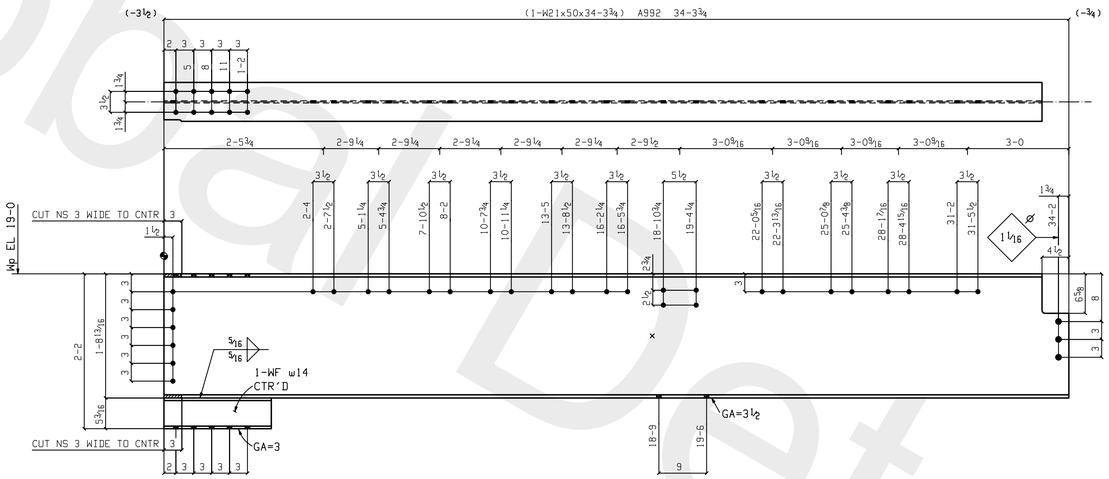


## ONE BEAM 11B69

| | |
|---|---|
| W | 20 13/16 x 3/8 |
| F | 6½ x 9/16 |
| K | 1¼ x ⅞ |

# BILL OF MATERIAL

| LIFT NO. | LIFT QTY. | NO. OF PIECES | PIECE MARK | MATERIAL | LENGTH FT. | LENGTH IN. | REMARKS | WEIGHT TOTAL |
|---|---|---|---|---|---|---|---|---|
| 11 | 1 | ONE | 11B69 | BEAM | | | | 1732 |
| | | 1 | 11B69 | W21x50 | 34 | 3¾ | A992 | 1705 |
| | | 1 | w14 | W5x19 | 1 | 6 | A992 | 28 |
| | | | | FIELD BOLTS | | | | |
| | | 3 | | 1 Dia A325N | 0 | 2 | 1HD WASH | |
| | | 10 | | ¾ Dia A325N | 0 | 2¾ | 1HD WASH | |
| | | 14 | | ¾ Dia A325N | 0 | 2½ | 1HD WASH | |
| | | 6 | | ¾ Dia A325N | 0 | 2 | 1HD WASH | |
| | | | | | | | Total weight : | |

HOLES: 13/16" DIA U.N.O.
SURFACE PREP: SSPC-SP 3
FINISH: **NONE**
ELECTRODES: E70XX-(LOW HYDROGEN)

GENERAL NOTES:

ALL DIMENSIONS FROM END OF MAIN MATERIAL UNLESS NOTED.
ALL VERTICAL SPACING OF HOLES TO BE 3" UNLESS NOTED.
ALL COPES TO HAVE ½" MINIMUM RADIUS.
CHARGES FOR CORRECTIVE WORK WILL NOT BE HONORED UNLESS PREVIOUS APPROVAL IS OBTAINED FROM JEFFORDS STEEL AND ENGINEERING COMPANY
MEMBERS ARE TO BE ERECTED SO THAT MARKED END IS IN THE SAME LOCATION AS ON THE E DWG
ON SHOP BOLTED CLIP ANGLES ON BEAMS: ON PC MARK END, INSERT SHOP BOLTS SO THE HEAD OF THE BOLT IS ON THE NEAR SIDE OF BEAM. IN THE NON-PC MARK END, INSERT BOLTS SO THE HEAD OF THE BOLT IS ON THE FAR SIDE OF BEAM.

DRAWINGS PREPARED BY, GLOBAL DETAILING, INC. JOB # 12-396

print record

| | | | | |
|---|---|---|---|---|
| | FAB | 4.17.12 | | |
| 1 | | | | |

job no. 4503
date Jan 14 2015
drawn by MC
checked by GDI

revisions

| rev# | date | description |
|---|---|---|
| | | |


Jeffords
STEEL AND ENGINEERING COMPANY
P.O. BOX 40-1338 ROUTE #22
PLATTSBURGH, N.Y. 12901
518-561-4061


customer
ENCOMPASS DEVELOP
DESIGN CONSTRUCTION

project
AKWESASNE MOHAWK
HOTEL
873 STATE HIGHWAY 37
AKWESASNE NY

sheet
11B69

Global Detailing Inc

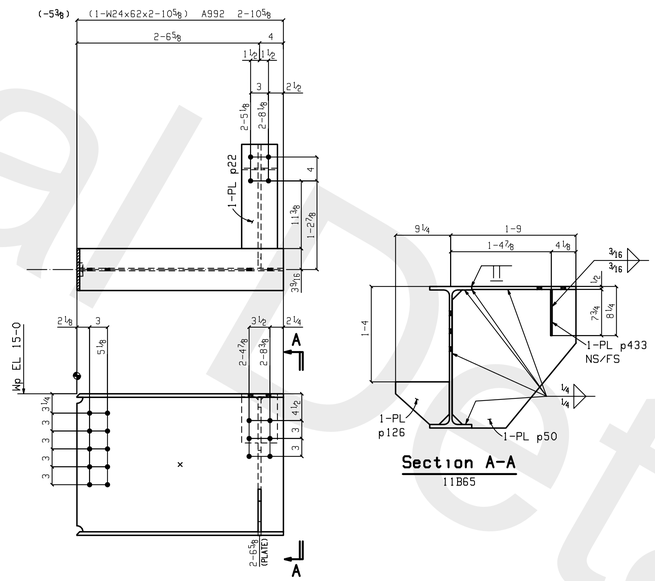


Section A-A
11B65

ONE BEAM 11B65

| | |
|---|---|
| W | 23 3/4 x 7/16 |
| F | 7 1/16 x 9/16 |
| K | 1 1/2 x 1 1/8 |

DRAWINGS PREPARED BY,
GLOBAL DETAILING, INC.
JOB # 12-396

# BILL OF MATERIAL

| LIFT NO. | LIFT QTY. | NO. OF PIECES | PIECE MARK | MATERIAL | LENGTH FT. | LENGTH IN. | REMARKS | WEIGHT TOTAL |
|---|---|---|---|---|---|---|---|---|
| 11 | 1 | ONE | 11B65 | BEAM | | | | 257 |
| | | 1 | 11B65 | W24x62 | 2 | 10 5/8 | A992 | 177 |
| | | 1 | p50 | PL 1/2x20 3/4 | 1 | 11 1/4 | A572-50 | 56 |
| | | 1 | p126 | PL 1/2x7 3/16 | 0 | 9 | A572-50 | 7 |
| | | 1 | p22 | PL 1/2x6 | 1 | 5 1/2 | A572-50 | 15 |
| | | 2 | p433 | PL 1/4x2 3/4 | 0 | 7 3/4 | A572-50 | 3 |
| | | | | FIELD BOLTS | | | | |
| | | 10 | | 3/4 Dia A325N | 0 | 2 | 1HD WASH | |

Total weight :

HOLES: 13/16" DIA U.N.O.
SURFACE PREP: SSPC-SP 3
FINISH: **NONE**
ELECTRODES: E70XX-(LOW HYDROGEN)

GENERAL NOTES:

ALL DIMENSIONS FROM END OF MAIN MATERIAL UNLESS NOTED.
ALL VERTICAL SPACING OF HOLES TO BE 3" UNLESS NOTED.
ALL COPES TO HAVE 1/2" MINIMUM RADIUS.
CHARGES FOR CORRECTIVE WORK WILL NOT BE HONORED UNLESS PREVIOUS APPROVAL IS OBTAINED FROM JEFFORDS STEEL AND ENGINEERING COMPANY
MEMBERS ARE TO BE ERECTED SO THAT MARKED END IS IN THE SAME LOCATION AS ON THE E DWG
ON SHOP BOLTED CLIP ANGLES ON BEAMS: ON PC MARK END, INSERT SHOP BOLTS SO THE HEAD OF THE BOLT IS ON THE NEAR SIDE OF BEAM. IN THE NON-PC MARK END, INSERT BOLTS SO THE HEAD OF THE BOLT IS ON THE FAR SIDE OF BEAM.

print record

| | | | | |
|---|---|---|---|---|
| 1 | TAB | 1.17.12 | | |

job no. 4503
date Jan 14 2015
drawn by MC
checked by GM

revisions

| rev# | date | description |
|---|---|---|
| | | |


Jeffords
STEEL AND ENGINEERING COMPANY
P.O. BOX 40-1338 ROUTE #22
PLATTSBURGH, N.Y. 12901
518-561-4061


customer
ENCOMPASS DEVELOP
DESIGN CONSTRUCTION

project
AKWESASNE MOHAWK
HOTEL
873 STATE HIGHWAY 37
AKWESASNE NY

sheet
11B65

Global Detailing Inc

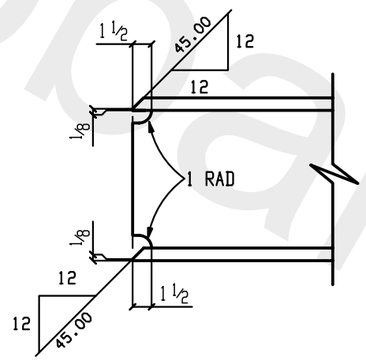


TYP WELD PREP

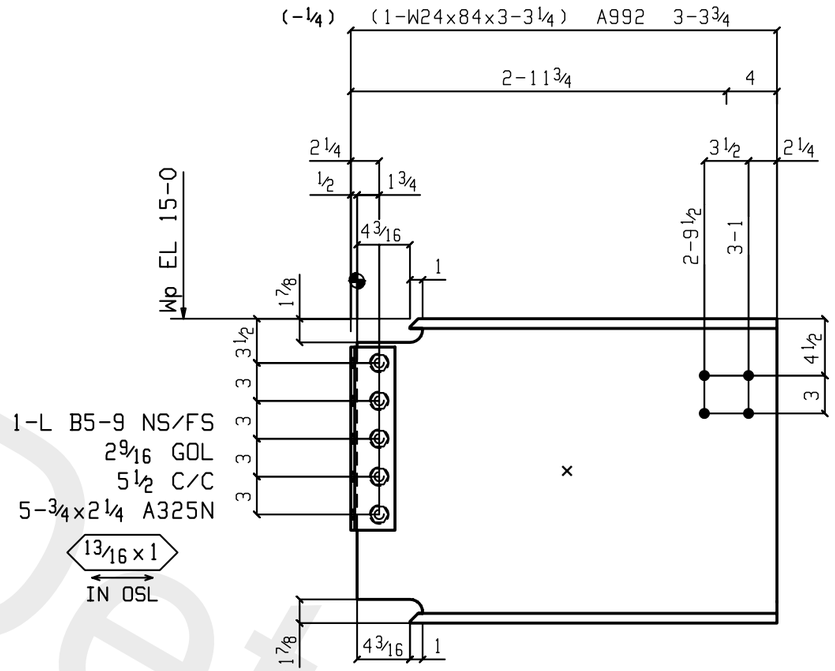


# ONE BEAM 11B42

| | |
|---|---|
| W | 24 1/8 x 1/2 |
| F | 9 x 3/4 |
| K | 1 11/16 x 1 1/8 |

## BILL OF MATERIAL

| LIFT NO. | LIFT QTY. | NO. OF PIECES | PIECE MARK | MATERIAL | LENGTH FT. | LENGTH IN. | REMARKS | WEIGHT TOTAL |
|---|---|---|---|---|---|---|---|---|
| 11 | 1 | ONE | 11B42 | BEAM | | | | 276 |
| | | 1 | 11B42 | W24x84 | 3 | 3 1/4 | A992 | 254 |
| | | 2 | B5-9 | L4x3 1/2x5/16 | 1 | 2 1/2 | A572-50 | 19 |
| | | 5 | | 3/4 Dia A325N | 0 | 2 1/4 | 1HD WASH | 3 |
| | | | | | | | | |
| | | | | FIELD BOLTS | | | | |
| | | 10 | | 3/4 Dia A325N | 0 | 2 1/4 | 1HD WASH | |
| | | | | | | | | |
| | | | | | | | | 276 |

HOLES: 13/16" DIA U.N.O.
SURFACE PREP: SSPC-SP 3
FINISH: **NONE**
ELECTRODES: E70XX-(LOW HYDROGEN)

GENERAL NOTES:

ALL DIMENSIONS FROM END OF MAIN MATERIAL U/N.
ALL VERTICAL SPACING OF HOLES TO BE 3" U/N.
ALL COPES TO HAVE 1/2" MINIMUM RADIUS.

CHARGES FOR CORRECTIVE WORK WILL NOT BE HONORED UNLESS PREVIOUS APPROVAL IS OBTAINED FROM JEFFORDS STEEL AND ENGINEERING COMPANY.

MEMBERS ARE TO BE ERECTED SO THAT MARKED END IS IN THE SAME LOCATION AS ON THE ERECTION DRAWING.

ON SHOP BOLTED CLIP ANGLES ON BEAMS: ON PIECE MARK END, INSERT SHOP BOLTS SO THE HEAD OF THE BOLT IS ON THE NEAR SIDE OF BEAM. ON THE NON-PIECE MARK END, INSERT BOLTS SO THE HEAD OF THE BOLT IS ON THE FAR SIDE OF BEAM.

REVISIONS

| rev# | date | description |
|---|---|---|
| | | |

| | |
|---|---|
| job no. | 4503 |
| date | Jan 14 201 |
| drawn by | MC |
| checked by | GDI |

PRINT RECORD

| | | |
|---|---|---|
| 1 | FAB | 4.17.12 |

DRAWINGS PREPARED BY,
GLOBAL DETAILING, INC.
JOB # 12-396

customer
ENCOMPASS DEVELOP
DESIGN CONSTRUCTION

Jeffords
STEEL AND ENGINEERING COMPANY
P.O. BOX 40-4398 ROUTE #22
PLATTSBURGH,N.Y 12901
518-561-4061

project
AKWESASNE MOHAWK
HOTEL
873 STATE HIGHWAY 37
AKWESASNE, NY

11B42

Global Detailing Inc

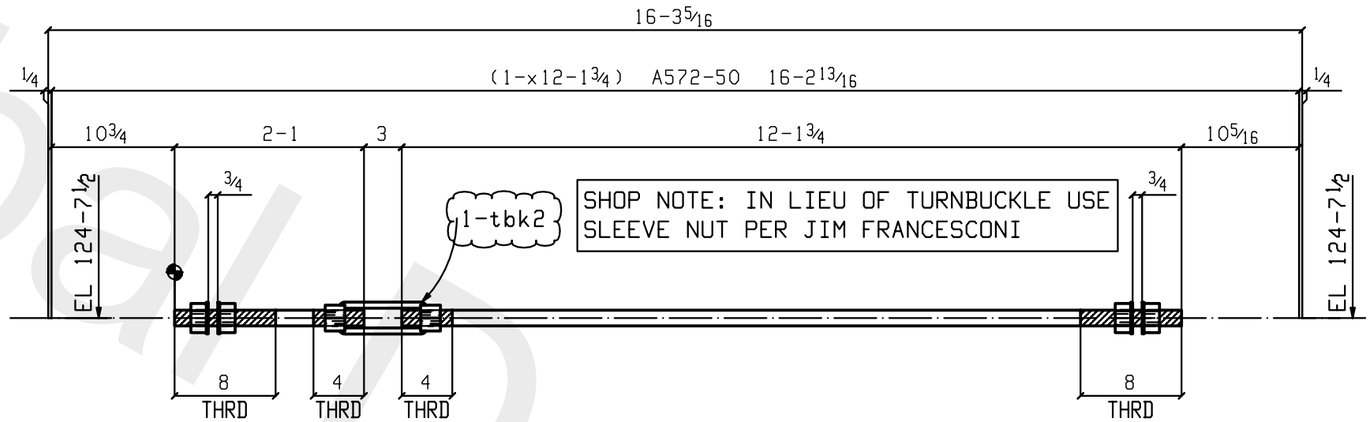


# 2 ROD BRACES 9VB41

## BILL OF MATERIAL

| LIFT NO. | LIFT QTY. | NO. OF PIECES | PIECE MARK | MATERIAL | LENGTH FT. | LENGTH IN. | REMARKS | WEIGHT TOTAL |
|---|---|---|---|---|---|---|---|---|
| 9 | 2 | 2 | 9VB41 | ROD BRACE | | | Galv | 126 |
| | | 2 | 9VB41L | THRD ROD | 12 | 1 3/4 | A36 | 101 |
| | | 2 | 9VB41R | THRD ROD | 2 | 1 | A36 | 17 |
| | | 2 | tbk2 | TRNBKLE | 0 | 9 1/8 | | 8 |
| | | 8 | | 1 1/4 NUT | | | HHX A563 | |
| | | 8 | | 1 1/4 WASHER | | | HD F436 | |
| | | | | | | | | |
| | | | | | | | | |
| | | | | | | | | 126 |

HOLES: 13/16" DIA U.N.O.
SURFACE PREP: SSPC-SP 2
FINISH: **HOT DIP GALVANIZE**
ELECTRODES: E70XX-(LOW HYDROGEN)

GENERAL NOTES:

ALL DIMENSIONS FROM END OF MAIN MATERIAL U/N.
ALL VERTICAL SPACING OF HOLES TO BE 3" U/N.
ALL COPES TO HAVE 1/2" MINIMUM RADIUS.

CHARGES FOR CORRECTIVE WORK WILL NOT BE HONORED UNLESS PREVIOUS APPROVAL IS OBTAINED FROM JEFFORDS STEEL AND ENGINEERING COMPANY.

MEMBERS ARE TO BE ERECTED SO THAT MARKED END IS IN THE SAME LOCATION AS ON THE ERECTION DRAWING.

ON SHOP BOLTED CLIP ANGLES ON BEAMS: ON PIECE MARK END, INSERT SHOP BOLTS SO THE HEAD OF THE BOLT IS ON THE NEAR SIDE OF BEAM. ON THE NON-PIECE MARK END, INSERT BOLTS SO THE HEAD OF THE BOLT IS ON THE FAR SIDE OF BEAM.

REVISIONS

| rev# | date | description |
|---|---|---|
| | | |

job no. 4503
date Jan 14 201
drawn by AQ
checked by GDI

PRINT RECORD

| | | |
|---|---|---|
| 1 | APPROVAL | 6-22-12 |
| 2 | SHOP | 7-26-12 |

DRAWINGS PREPARED BY,
GLOBAL DETAILING, INC.
JOB # 12-396

customer
ENCOMPASS DEVELOP
DESIGN CONSTRUCTION

Jeffords
STEEL AND ENGINEERING COMPANY
P.O. BOX 40-4398 ROUTE #22
PLATTSBURGH,N.Y 12901
518-561-4061

project
AKWESASNE MOHAWK
HOTEL
873 STATE HIGHWAY 37
AKWESASNE, NY

9VB41

Global Detailing Inc

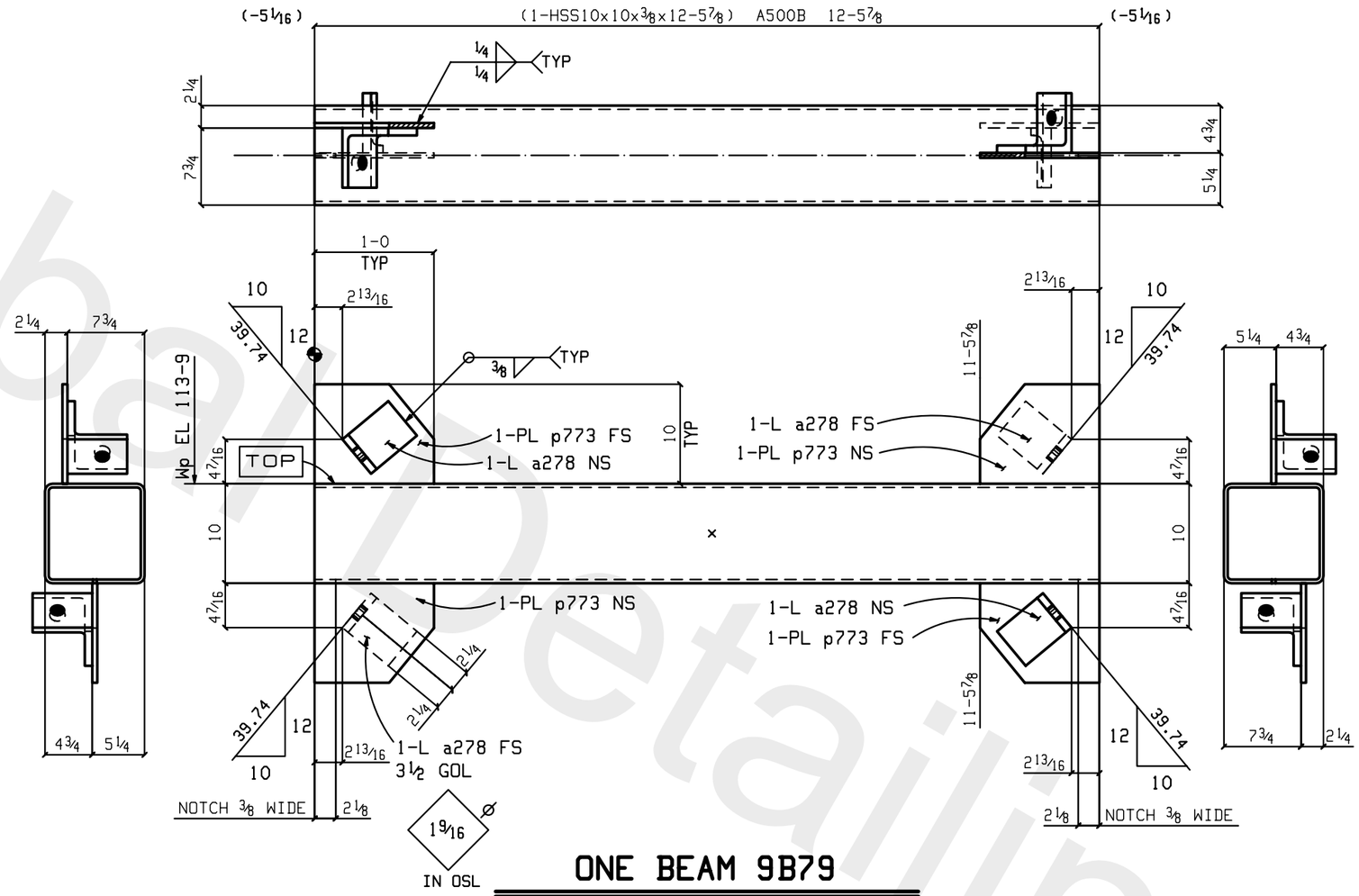


# ONE BEAM 9B79

## BILL OF MATERIAL

| LIFT NO. | LIFT QTY. | NO. OF PIECES | PIECE MARK | MATERIAL | LENGTH FT. | LENGTH IN. | REMARKS | WEIGHT TOTAL |
|---|---|---|---|---|---|---|---|---|
| 9 | 1 | ONE | 9B79 | BEAM | | | Galv | 701 |
| | | 1 | 9B79 | HSS10x10x3/8 | 12 | 5 7/8 | A500B | 598 |
| | | 4 | a278 | L6x6x3/4 | 0 | 4 1/2 | A572-50 | 41 |
| | | 4 | p773 | PL1/2x10 | 1 | 0 | A572-50 | 61 |
| | | | | | | | | |
| | | | | | | | | |
| | | | | | | | | |
| | | | | | | | | |
| | | | | | | | | 701 |

HOLES: 13/16" DIA U.N.O.
SURFACE PREP: SSPC-SP 2
FINISH: **HOT DIP GALVANIZE**
ELECTRODES: E70XX-(LOW HYDROGEN)

GENERAL NOTES:

ALL DIMENSIONS FROM END OF MAIN MATERIAL U/N.
ALL VERTICAL SPACING OF HOLES TO BE 3" U/N.
ALL COPES TO HAVE 1/2" MINIMUM RADIUS.

CHARGES FOR CORRECTIVE WORK WILL NOT BE HONORED UNLESS PREVIOUS APPROVAL IS OBTAINED FROM JEFFORDS STEEL AND ENGINEERING COMPANY.

MEMBERS ARE TO BE ERECTED SO THAT MARKED END IS IN THE SAME LOCATION AS ON THE ERECTION DRAWING.

ON SHOP BOLTED CLIP ANGLES ON BEAMS: ON PIECE MARK END, INSERT SHOP BOLTS SO THE HEAD OF THE BOLT IS ON THE NEAR SIDE OF BEAM. ON THE NON-PIECE MARK END, INSERT BOLTS SO THE HEAD OF THE BOLT IS ON THE FAR SIDE OF BEAM.

REVISIONS

| rev# | date | description |
|---|---|---|
| | | |

| | |
|---|---|
| job no. | 4503 |
| date | Jan 14 201 |
| drawn by | AQ |
| checked by | GDI |

PRINT RECORD

| | | |
|---|---|---|
| 1 | APPROVAL | 6-22-12 |
| 2 | SHOP | 7-26-12 |

DRAWINGS PREPARED BY,
GLOBAL DETAILING, INC.
JOB # 12-396

customer
ENCOMPASS DEVELOP
DESIGN CONSTRUCTION

Jeffords
STEEL AND ENGINEERING COMPANY
P.O. BOX 40-4398 ROUTE #22
PLATTSBURGH, N.Y 12901
518-561-4061

project
AKWESASNE MOHAWK
HOTEL
873 STATE HIGHWAY 37
AKWESASNE, NY

9B79

Global Detailing Inc

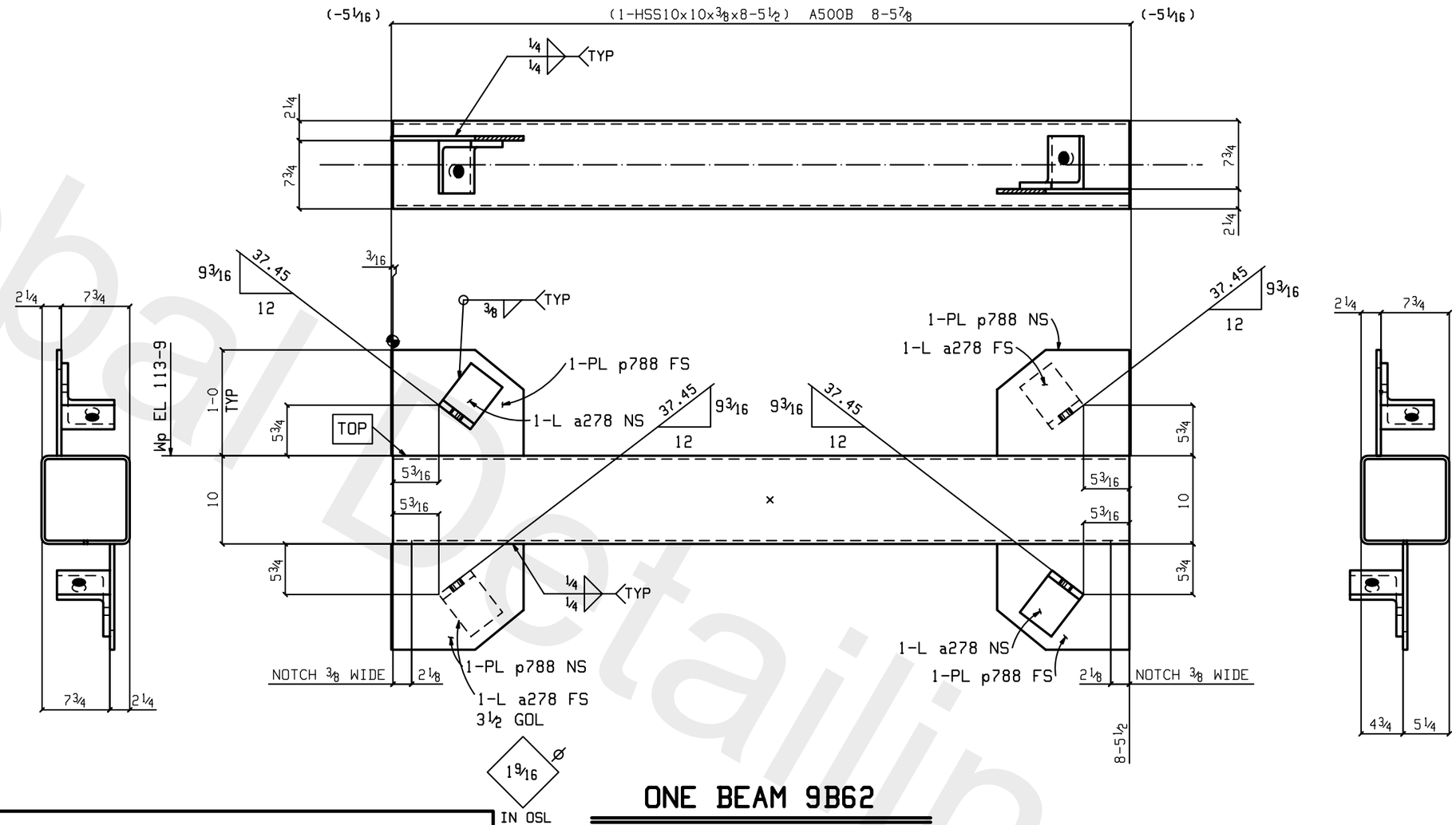


# ONE BEAM 9B62

## BILL OF MATERIAL

| LIFT NO. | LIFT QTY. | NO. OF PIECES | PIECE MARK | MATERIAL | LENGTH FT. | LENGTH IN. | REMARKS | WEIGHT TOTAL |
|---|---|---|---|---|---|---|---|---|
| 9 | 1 | ONE | 9B62 | BEAM | | | Galv | 541 |
| | | 1 | 9B62 | HSS10x10x3/8 | 8 | 5 1/2 | A500B | 405 |
| | | 4 | a278 | L6x6x3/4 | 0 | 4 1/2 | A572-50 | 41 |
| | | 4 | p788 | PL 1/2x12 | 1 | 3 | A572-50 | 95 |
| | | | | | | | | 541 |

HOLES: 13/16" DIA U.N.O.
SURFACE PREP: SSPC-SP 2
FINISH: **HOT DIP GALVANIZE**
ELECTRODES: E70XX-(LOW HYDROGEN)

GENERAL NOTES:

ALL DIMENSIONS FROM END OF MAIN MATERIAL U/N.
ALL VERTICAL SPACING OF HOLES TO BE 3" U/N.
ALL COPES TO HAVE 1/2" MINIMUM RADIUS.

CHARGES FOR CORRECTIVE WORK WILL NOT BE HONORED UNLESS PREVIOUS APPROVAL IS OBTAINED FROM JEFFORDS STEEL AND ENGINEERING COMPANY.

MEMBERS ARE TO BE ERECTED SO THAT MARKED END IS IN THE SAME LOCATION AS ON THE ERECTION DRAWING.

ON SHOP BOLTED CLIP ANGLES ON BEAMS: ON PIECE MARK END, INSERT SHOP BOLTS SO THE HEAD OF THE BOLT IS ON THE NEAR SIDE OF BEAM. ON THE NON-PIECE MARK END, INSERT BOLTS SO THE HEAD OF THE BOLT IS ON THE FAR SIDE OF BEAM.

REVISIONS

| rev# | date | description |
|---|---|---|
| | | |

| | |
|---|---|
| job no. | 4503 |
| date | Jan 14 201 |
| drawn by | AQ |
| checked by | GDI |

PRINT RECORD

| | | |
|---|---|---|
| 1 | APPROVAL | 6-22-12 |
| 2 | SHOP | 7-26-12 |

DRAWINGS PREPARED BY,
GLOBAL DETAILING, INC.
JOB # 12-396

customer
ENCOMPASS DEVELOP
DESIGN CONSTRUCTION

Jeffords
STEEL AND ENGINEERING COMPANY
P.O. BOX 40-4398 ROUTE #22
PLATTSBURGH,N.Y 12901
518-561-4061

project
AKWESASNE MOHAWK
HOTEL
873 STATE HIGHWAY 37
AKWESASNE, NY

9B62

Global Detailing Inc

# BILL OF MATERIAL

| LIFT NO. | LIFT QTY. | NO. OF PIECES | PIECE MARK | MATERIAL | LENGTH FT. | LENGTH IN. | REMARKS | WEIGHT TOTAL |
|---|---|---|---|---|---|---|---|---|
| 4 | 1 | ONE | 4B70 | BEAM | | | | 3717 |
| | | 1 | 4B70 | W14x74 | 32 | 2 15/16 | SIE A992 | 2385 |
| | | 1 | bp59 | BPL 1/2x14 9/16 | 9 | 5 | BENT A572-50 | 233 |
| | | 1 | bp2 | BPL 1/2x14 9/16 | 9 | 2 1/2 | BENT A572-50 | 228 |
| | | 1 | p766 | PL 1/2x8 3/4 | 30 | 9 | A572-50 | 451 |
| | | 1 | p320 | PL 1/2x8 3/4 | 5 | 8 15/16 | A572-50 | 86 |
| | | 1 | p306 | PL 1/2x8 3/4 | 4 | 6 13/16 | A572-50 | 68 |
| | | 1 | p15 | PL 3/8x14 1/4 | 1 | 9 1/4 | A572-50 | 31 |
| | | 1 | p318 | PL 3/8x14 1/4 | 1 | 8 3/4 | A572-50 | 27 |
| | | 1 | p463 | PL 3/8x8 1/2 | 1 | 0 | A572-50 | 10 |
| | | 2 | p122 | PL 3/8x8 | 1 | 4 1/4 | A572-50 | 17 |
| | | 1 | p175 | PL 3/8x6 1/2 | 0 | 8 1/2 | A572-50 | 5 |
| | | 28 | p357 | PL 3/8x4 3/4 | 0 | 9 3/16 | A572-50 | 128 |
| | | 28 | p354 | PL 3/8x2 7/8 | 0 | 4 3/4 | A572-50 | 39 |
| | | 11 | p8 | PL 3/8x2 | 0 | 2 | A572-50 | 5 |
| | | 12 | ss6 | WS 3/4 | 0 | 4 | A108 | 6 |
| | | | | | | | | |
| | | | | FIELD BOLTS | | | | |
| | | 21 | | 1 Dia A325SC | 0 | 2 1/4 | IHD WASH | |
| | | | | | | | | |
| | | | | | | | Total weight : | |

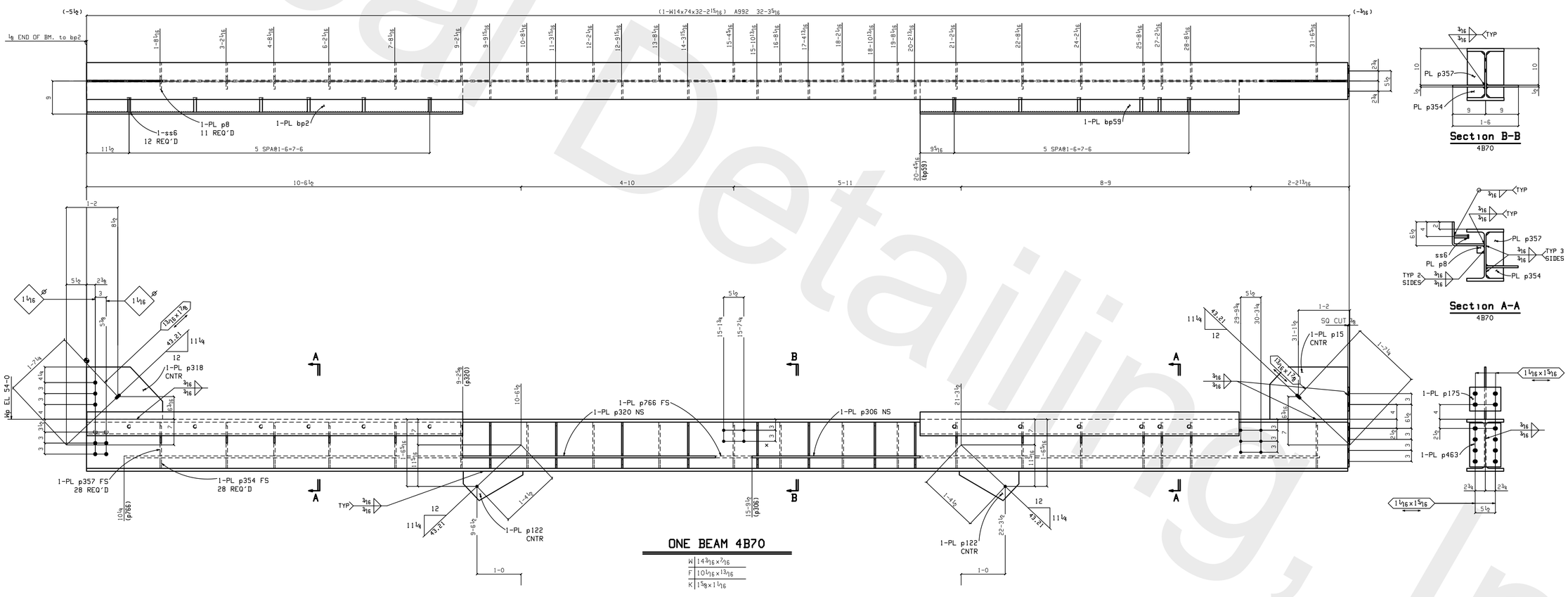


HOLES: 13/16" DIA U.N.O.
SURFACE PREP: SSPC-SP 3
FINISH: **NONE**
ELECTRODES: E70XX-(LOW HYDROGEN)

GENERAL NOTES:

ALL DIMENSIONS FROM END OF MAIN MATERIAL UNLESS NOTED.
ALL VERTICAL SPACING OF HOLES TO BE 3" UNLESS NOTED.
ALL COPES TO HAVE 1/2" MINIMUM RADIUS.

CHARGES FOR CORRECTIVE WORK WILL NOT BE HONORED UNLESS PREVIOUS APPROVAL IS OBTAINED FROM JEFFORDS STEEL AND ENGINEERING COMPANY

MEMBERS ARE TO BE ERECTED SO THAT MARKED END IS IN THE SAME LOCATION AS ON THE E DWG

ON SHOP BOLTED CLIP ANGLES ON BEAMS: ON PC MARK END, INSERT SHOP BOLTS SO THE HEAD OF THE BOLT IS ON THE NEAR SIDE OF BEAM. IN THE NON-PC MARK END, INSERT BOLTS SO THE HEAD OF THE BOLT IS ON THE FAR SIDE OF BEAM.

DRAWINGS PREPARED BY,
GLOBAL DETAILING, INC.
JOB # 12-396

Global Detailing, Inc

print record

| | | |
|---|---|---|
| 1 | APP/FAB | 5.11.12 |

job no. 4503
date Jan 14 2015
drawn by MC
checked by GM

revisions

| rev# | date | description |
|---|---|---|


Jeffords
STEEL AND ENGINEERING COMPANY
P.O. BOX 40-1338 ROUTE #22
PLATTSBURGH, N.Y. 12901
518-561-4061


customer
ENCOMPASS DEVELOP
DESIGN CONSTRUCTION

project
AKWESASNE MOHAWK
HOTEL
873 STATE HIGHWAY 37
AKWESASNE NY

sheet
4B70

# BILL OF MATERIAL

| LIFT NO. | LIFT QTY. | NO. OF PIECES | PIECE MARK | MATERIAL | LENGTH FT. | LENGTH IN. | REMARKS | WEIGHT TOTAL |
|---|---|---|---|---|---|---|---|---|
| 4 | 1 | ONE | 4B67 | BEAM | | | | 3582 |
| | | 1 | 4B67 | W14x74 | 29 | 11¾ | A992 | 2206 |
| | | 1 | a222 | L4x4x½ | 1 | 11½ | A572-50 | 24 |
| | | 1 | a228 | L4x4x½ | 1 | 11½ | A572-50 | 24 |
| | | 1 | p718 | PL½x16¾ | 1 | 6½ | A572-50 | 41 |
| | | 1 | p815 | PL½x16 | 1 | 7½ | A572-50 | 41 |
| | | 2 | bp2 | BPL½x14 9/16 | 9 | 2½ | BENT A572-50 | 455 |
| | | 1 | p726 | PL½x8¾ | 28 | 6½ | A572-50 | 425 |
| | | 1 | p128 | PL½x8¾ | 11 | 1¾ | A572-50 | 166 |
| | | 2 | p92 | PL⅜x8 11/16 | 1 | 4¾ | A572-50 | 19 |
| | | 26 | p244 | PL⅜x4¾ | 0 | 9⅛ | A572-50 | 118 |
| | | 26 | p174 | PL⅜x2⅞ | 0 | 8¾ | A572-50 | 52 |
| | | 12 | p8 | PL⅜x2 | 0 | 2 | A572-50 | 5 |
| | | 12 | ss6 | WS¾ | 0 | 4 | A108 | 6 |
| | | | | | | | | |
| | | | | FIELD BOLTS | | | | |
| | | 2 | | 1 Dia A325N | 0 | 3 | 1HD WASH | |
| | | 4 | | 1 Dia A325SC | 0 | 2½ | 1HD WASH | |
| | | 6 | | 1 Dia A325SC | 0 | 2¼ | 1HD WASH | |
| | | | | | | | Total weight : | |

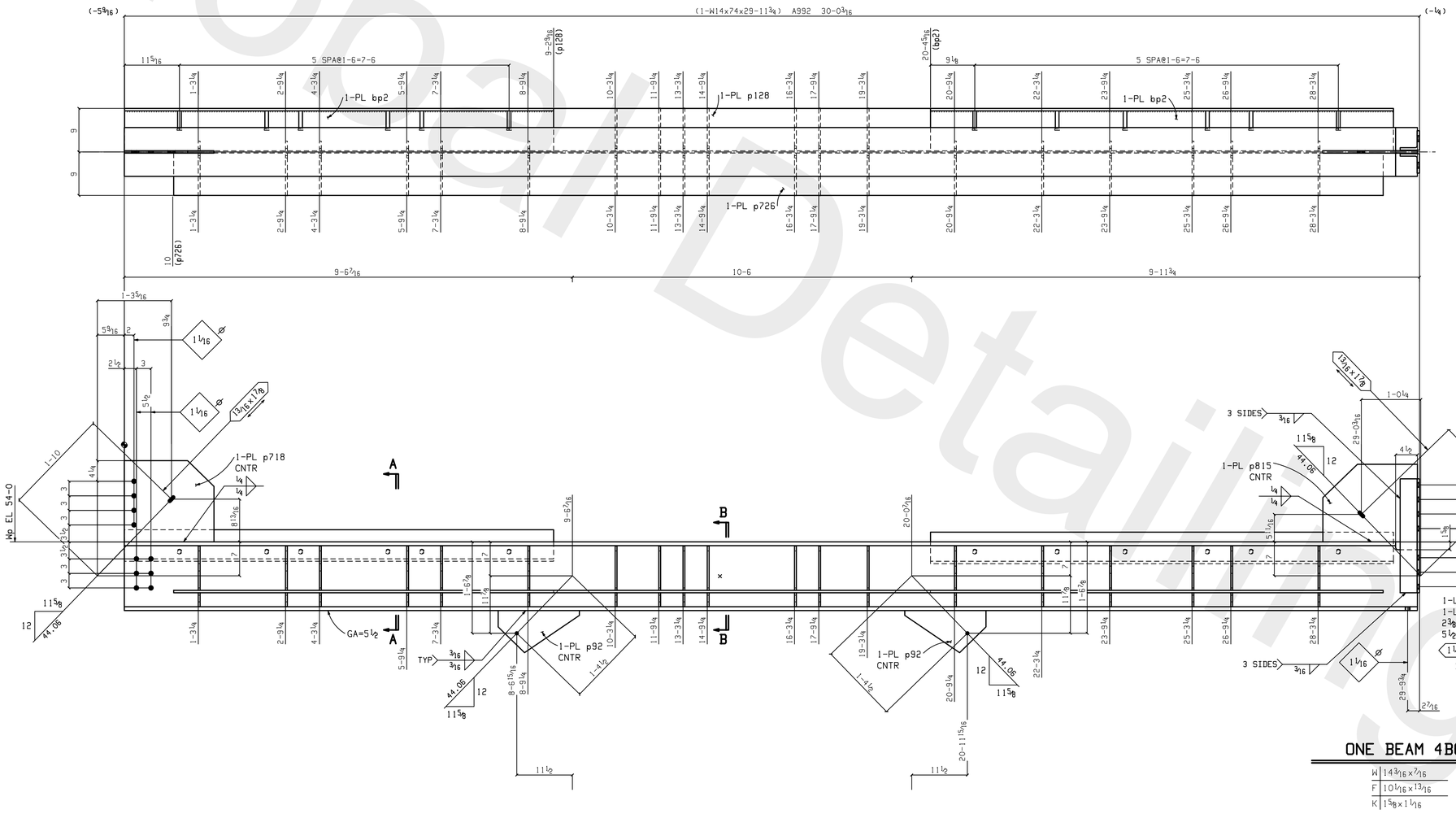


ONE BEAM 4B67

| | |
|---|---|
| W | 14 3/16 x 7/16 |
| F | 10 1/16 x 13/16 |
| K | 1⅝ x 1 1/16 |

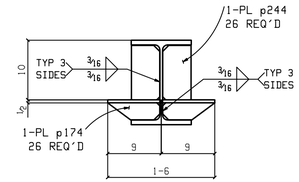


Section B-B
4B67

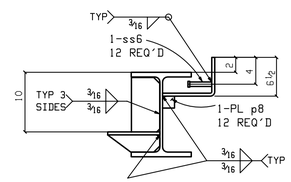


Section A-A
4B67

HOLES: 13/16" DIA U.N.O.
SURFACE PREP: SSPC-SP 3
FINISH: **NONE**
ELECTRODES: E70XX-(LOW HYDROGEN)

GENERAL NOTES:

ALL DIMENSIONS FROM END OF MAIN MATERIAL UNLESS NOTED.
ALL VERTICAL SPACING OF HOLES TO BE 3" UNLESS NOTED.
ALL COPES TO HAVE ½" MINIMUM RADIUS.

CHARGES FOR CORRECTIVE WORK WILL NOT BE HONORED UNLESS PREVIOUS APPROVAL IS OBTAINED FROM JEFFORDS STEEL AND ENGINEERING COMPANY

MEMBERS ARE TO BE ERECTED SO THAT MARKED END IS IN THE SAME LOCATION AS ON THE E DWG

ON SHOP BOLTED CLIP ANGLES ON BEAMS: ON PC MARK END, INSERT SHOP BOLTS SO THE HEAD OF THE BOLT IS ON THE NEAR SIDE OF BEAM. IN THE NON-PC MARK END, INSERT BOLTS SO THE HEAD OF THE BOLT IS ON THE FAR SIDE OF BEAM.

DRAWINGS PREPARED BY, GLOBAL DETAILING, INC. JOB # 12-396

print record

| | | |
|---|---|---|
| 1 | APP/FAB | 5.11.12 |

job no. 4503
date Jan 14 2015
drawn by MC
checked by GM

revisions

| rev# | date | description |
|---|---|---|


Jeffords
STEEL AND ENGINEERING COMPANY
P.O. BOX 40-1338 ROUTE #22
PLATTSBURGH, N.Y. 12901
518-561-4061


customer
ENCOMPASS DEVELOP
DESIGN CONSTRUCTION

project
AKWESASNE MOHAWK
HOTEL
873 STATE HIGHWAY 37
AKWESASNE NY

sheet
4B67

Global Detailing, Inc

# BILL OF MATERIAL

| LIFT NO. | LIFT QTY. | NO. OF PIECES | PIECE MARK | MATERIAL | LENGTH FT. | LENGTH IN. | REMARKS | WEIGHT TOTAL |
|---|---|---|---|---|---|---|---|---|
| 4 | 1 | ONE | 4B65 | BEAM | | | | 3594 |
| | | 1 | 4B65 | W14x74 | 29 | 11 3/4 | A992 | 2207 |
| | | 1 | a242 | L4x4x1/2 | 2 | 0 3/4 | A572-50 | 26 |
| | | 1 | a243 | L4x4x1/2 | 2 | 0 3/4 | A572-50 | 26 |
| | | 1 | p808 | PL1/2x16 3/4 | 1 | 6 1/2 | A572-50 | 41 |
| | | 1 | p816 | PL1/2x16 | 1 | 7 1/2 | A572-50 | 41 |
| | | 2 | bp2 | BPL1/2x14 9/16 | 9 | 2 1/2 | BENT A572-50 | 455 |
| | | 2 | p128 | PL1/2x8 3/4 | 11 | 1 3/4 | A572-50 | 332 |
| | | 1 | p12 | PL1/2x8 3/4 | 9 | 0 3/8 | A572-50 | 131 |
| | | 1 | p272 | PL1/2x8 3/4 | 9 | 0 3/8 | A572-50 | 134 |
| | | 2 | p449 | PL3/8x9 | 1 | 4 3/4 | A572-50 | 20 |
| | | 26 | p244 | PL3/8x4 3/4 | 0 | 9 1/8 | A572-50 | 118 |
| | | 26 | p174 | PL3/8x2 1/8 | 0 | 8 3/4 | A572-50 | 52 |
| | | 12 | p8 | PL3/8x2 | 0 | 2 | A572-50 | 5 |
| | | 12 | ss6 | WS3/4 | 0 | 4 | A108 | 6 |
| | | | | | | | | |
| | | | | | | | | |
| | | | | FIELD BOLTS | | | | |
| | | 4 | | 1 Dia A325SC | 0 | 2 1/2 | 1HD WASH | |
| | | 6 | | 1 Dia A325SC | 0 | 2 1/4 | 1HD WASH | |
| | | 10 | | 1 Dia A490SC | 0 | 2 1/4 | 1HD WASH | |
| | | | | | | | | |
| | | | | | | | | |
| | | | | | | | | |
| | | | | | | | Total weight : | |

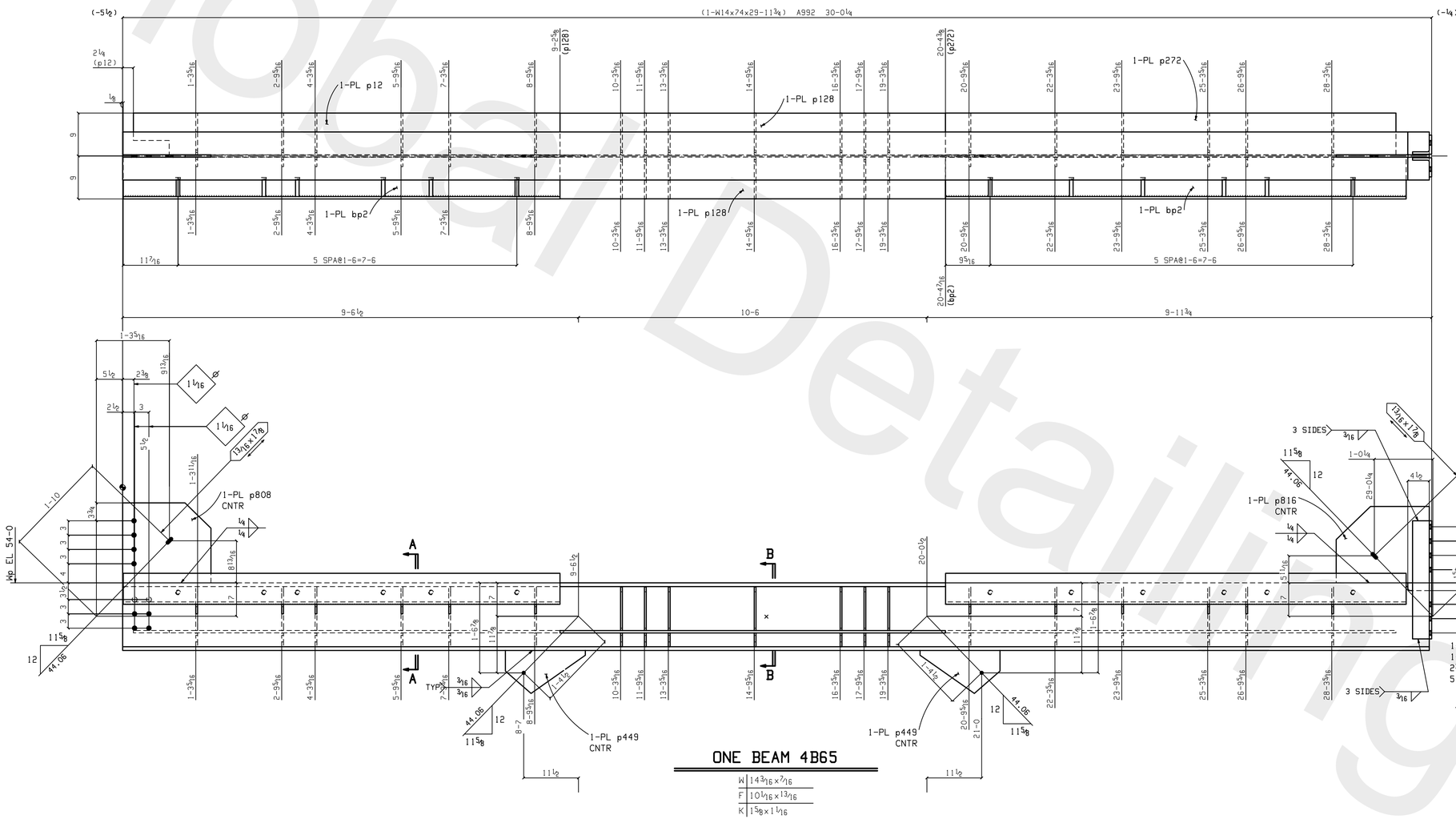


ONE BEAM 4B65

| | |
|---|---|
| W | 14 3/16 x 7/16 |
| F | 10 1/16 x 13/16 |
| K | 1 5/8 x 1 1/16 |

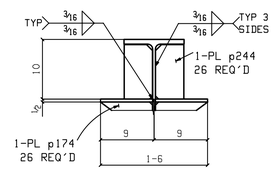


## Section B-B

4B65

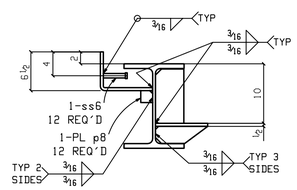


## Section A-A

4B65

HOLES: 13/16" DIA U.N.O.
SURFACE PREP: SSPC-SP 3
FINISH: **NONE**
ELECTRODES: E70XX-(LOW HYDROGEN)

GENERAL NOTES:

ALL DIMENSIONS FROM END OF MAIN MATERIAL UNLESS NOTED.
ALL VERTICAL SPACING OF HOLES TO BE 3" UNLESS NOTED.
ALL COPES TO HAVE 1/2" MINIMUM RADIUS.
CHARGES FOR CORRECTIVE WORK WILL NOT BE HONORED UNLESS PREVIOUS APPROVAL IS OBTAINED FROM JEFFORDS STEEL AND ENGINEERING COMPANY
MEMBERS ARE TO BE ERECTED SO THAT MARKED END IS IN THE SAME LOCATION AS ON THE E DWG
ON SHOP BOLTED CLIP ANGLES ON BEAMS: ON PC MARK END, INSERT SHOP BOLTS SO THE HEAD OF THE BOLT IS ON THE NEAR SIDE OF BEAM. IN THE NON-PC MARK END, INSERT BOLTS SO THE HEAD OF THE BOLT IS ON THE FAR SIDE OF BEAM.

DRAWINGS PREPARED BY, GLOBAL DETAILING, INC. JOB # 12-396

print record

| | | | | |
|---|---|---|---|---|
| 1 | APP/FAB | 5.11.12 | | |

job no. 4503
date Jan 14 2015
drawn by MC
checked by GM

revisions

| rev# | date | description |
|---|---|---|


Jeffords
STEEL AND ENGINEERING COMPANY
P.O. BOX 40-1338 ROUTE #22
PLATTSBURGH, N.Y. 12901
518-561-4061


customer
ENCOMPASS DEVELOP
DESIGN CONSTRUCTION

project
AKWESASNE MOHAWK
HOTEL
873 STATE HIGHWAY 37
AKWESASNE NY

sheet
4B65

Global Detailing, Inc

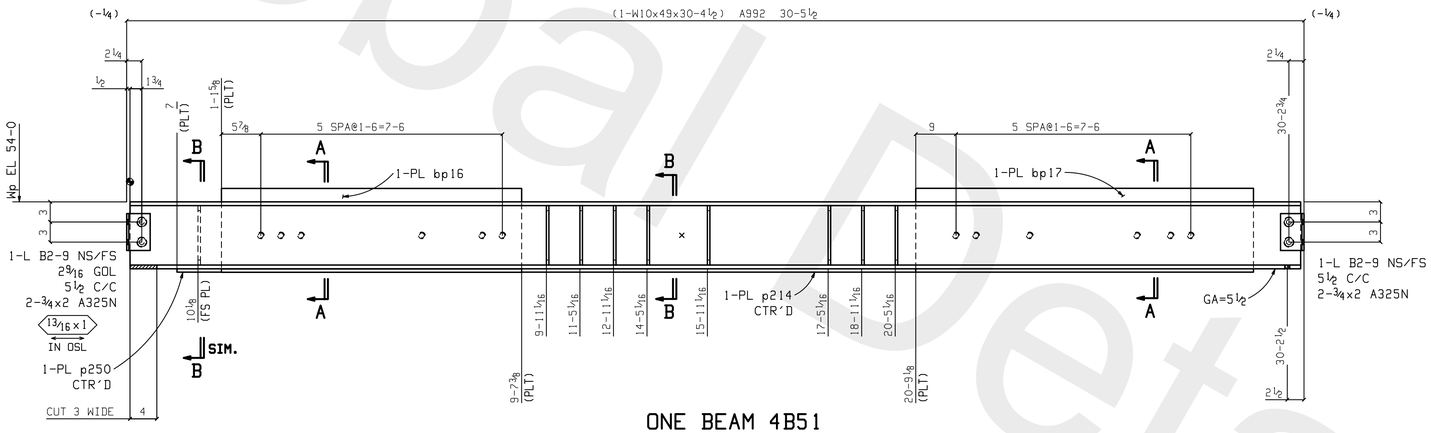


## ONE BEAM 4B51

| | |
|---|---|
| W | 10x5⁄16 |
| F | 10x3⁄16 |
| K | 1¼x⅞ |

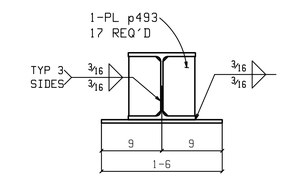


**Section B-B**
4B51

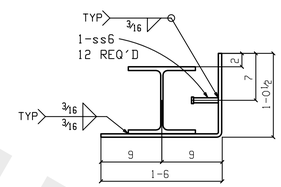


**Section A-A**
4B51

DRAWINGS PREPARED BY,
GLOBAL DETAILING, INC.
JOB # 12-396

## BILL OF MATERIAL

| LIFT NO. | LIFT QTY. | NO. OF PIECES | PIECE MARK | MATERIAL | LENGTH FT. | LENGTH IN. | REMARKS | WEIGHT TOTAL |
|---|---|---|---|---|---|---|---|---|
| 4 | 1 | ONE | 4B51 | BEAM | | | | 2827 |
| | | 1 | 4B51 | W10x49 | 30 | 4½ | A992 | 1484 |
| | | 4 | B2-9 | L4x3½x5⁄16 | 0 | 5½ | A572-50 | 14 |
| | | 1 | bp17 | BPL½x29 13⁄16 | 9 | 0 5⁄16 | BENT A572-50 | 457 |
| | | 1 | bp16 | BPL½x29 13⁄16 | 8 | 5¾ | BENT A572-50 | 430 |
| | | 1 | p214 | PL½x18 | 11 | 1¾ | A572-50 | 341 |
| | | 1 | p250 | PL½x6⅞ | 1 | 6 | A572-50 | 17 |
| | | 17 | p493 | PL⅜x4¾ | 0 | 8⅞ | A572-50 | 75 |
| | | 12 | ss6 | WS¾ | 0 | 4 | A108 | 6 |
| | | 4 | | ¾ Dia A325N | 0 | 2 | 1HD WASH | 3 |
| | | | | FIELD BOLTS | | | | |
| | | 2 | | ¾ Dia A325N | 0 | 2½ | 1HD WASH | |
| | | 4 | | ¾ Dia A325N | 0 | 2¼ | 1HD WASH | |

Total weight :

HOLES: 13⁄16" DIA U.N.O.
SURFACE PREP: SSPC-SP 3
FINISH: **NONE**
ELECTRODES: E70XX-(LOW HYDROGEN)

GENERAL NOTES:

ALL DIMENSIONS FROM END OF MAIN MATERIAL UNLESS NOTED.
ALL VERTICAL SPACING OF HOLES TO BE 3" UNLESS NOTED.
ALL COPES TO HAVE ½" MINIMUM RADIUS.

CHARGES FOR CORRECTIVE WORK WILL NOT BE HONORED UNLESS PREVIOUS APPROVAL IS OBTAINED FROM JEFFORDS STEEL AND ENGINEERING COMPANY

MEMBERS ARE TO BE ERECTED SO THAT MARKED END IS IN THE SAME LOCATION AS ON THE E DWG

ON SHOP BOLTED CLIP ANGLES ON BEAMS: ON PC MARK END, INSERT SHOP BOLTS SO THE HEAD OF THE BOLT IS ON THE NEAR SIDE OF BEAM. IN THE NON-PC MARK END, INSERT BOLTS SO THE HEAD OF THE BOLT IS ON THE FAR SIDE OF BEAM.

print record

| | | | | |
|---|---|---|---|---|
| 1 | APPFAB | 5.11.12 | | |

job no. 4503
date Jan 14 2015
drawn by MC
checked by GM

revisions

| rev# | date | description |
|---|---|---|
| | | |


STEEL AND ENGINEERING COMPANY
P.O. BOX 40-4338 ROUTE #22
PLATTSBURGH, N.Y. 12901
518-561-4061


customer
ENCOMPASS DEVELOP
DESIGN CONSTRUCTION

project
AKWESASNE MOHAWK
HOTEL
873 STATE HIGHWAY 37
AKWESASNE NY

sheet
4B51

Global Detailing Inc

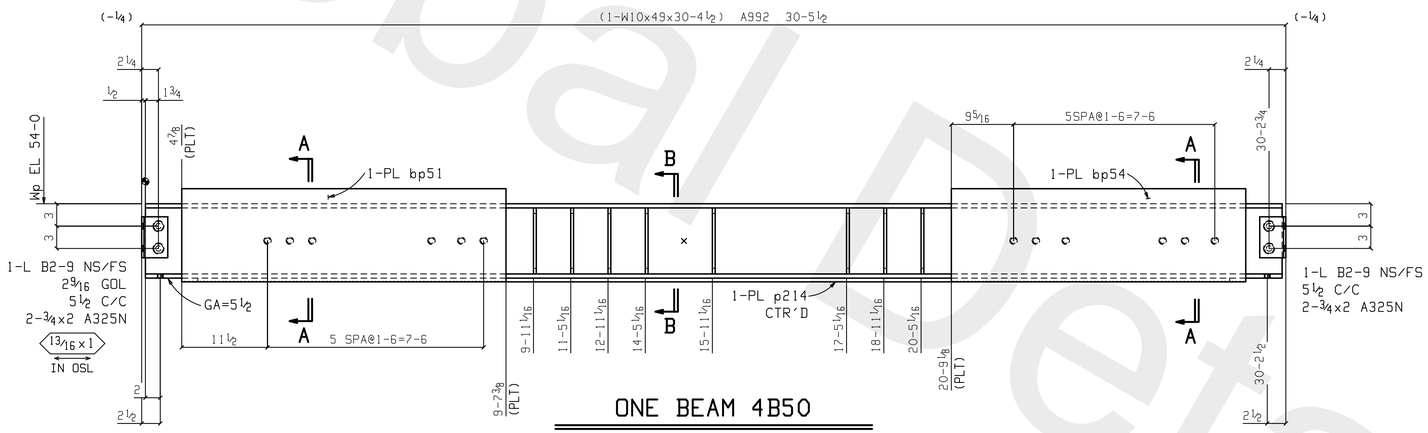


## ONE BEAM 4B50

| | |
|---|---|
| W | 10x5⁄16 |
| F | 10x9⁄16 |
| K | 1¼x⅞ |

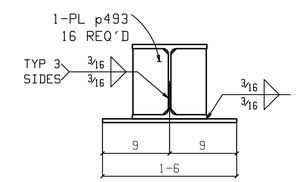


## Section B-B

4B50

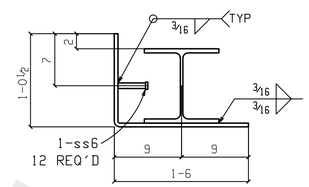


## Section A-A

4B50

DRAWINGS PREPARED BY,
GLOBAL DETAILING, INC.
JOB # 12-396

## BILL OF MATERIAL

| LIFT NO. | LIFT QTY. | NO. OF PIECES | PIECE MARK | MATERIAL | LENGTH FT. | LENGTH IN. | REMARKS | WEIGHT TOTAL |
|---|---|---|---|---|---|---|---|---|
| 4 | 1 | ONE | 4B50 | BEAM | | | | 2854 |
| | | 1 | 4B50 | W10x49 | 30 | 4½ | A992 | 1488 |
| | | 4 | B2-9 | L4x3½x5⁄16 | 0 | 5½ | A572-50 | 14 |
| | | 1 | bp51 | BPL½x29¹³⁄₁₆ | 9 | 2½ | BENT A572-50 | 466 |
| | | 1 | bp54 | BPL½x29¹³⁄₁₆ | 9 | 2½ | BENT A572-50 | 466 |
| | | 1 | p214 | PL½x18 | 11 | 1¾ | A572-50 | 341 |
| | | 16 | p493 | PL⅜x4¾ | 0 | 8⅞ | A572-50 | 71 |
| | | 12 | ss6 | WS¾ | 0 | 4 | A108 | 6 |
| | | 4 | | ¾ Dia A325N | 0 | 2 | 1HD WASH | 3 |
| | | | | FIELD BOLTS | | | | |
| | | 4 | | ¾ Dia A325N | 0 | 2½ | 1HD WASH | |
| | | 4 | | ¾ Dia A325N | 0 | 2¼ | 1HD WASH | |

Total weight :

HOLES: 13⁄16" DIA U.N.O.
SURFACE PREP: SSPC-SP 3
FINISH: **NONE**
ELECTRODES: E70XX-(LOW HYDROGEN)

GENERAL NOTES:

ALL DIMENSIONS FROM END OF MAIN MATERIAL UNLESS NOTED.
ALL VERTICAL SPACING OF HOLES TO BE 3" UNLESS NOTED.
ALL COPES TO HAVE ½" MINIMUM RADIUS.

CHARGES FOR CORRECTIVE WORK WILL NOT BE HONORED UNLESS PREVIOUS APPROVAL IS OBTAINED FROM JEFFORDS STEEL AND ENGINEERING COMPANY

MEMBERS ARE TO BE ERECTED SO THAT MARKED END IS IN THE SAME LOCATION AS ON THE E DWG

ON SHOP BOLTED CLIP ANGLES ON BEAMS: ON PC MARK END, INSERT SHOP BOLTS SO THE HEAD OF THE BOLT IS ON THE NEAR SIDE OF BEAM. IN THE NON-PC MARK END, INSERT BOLTS SO THE HEAD OF THE BOLT IS ON THE FAR SIDE OF BEAM.

print record

| | | | | |
|---|---|---|---|---|
| | | | | |
| 1 | APP/FAB | 5.11.12 | | |

job no. 4593
date Jan 14 2015
drawn by MC
checked by GM

revisions

| rev# | date | description |
|---|---|---|
| | | |

STEEL AND ENGINEERING COMPANY
P.O. BOX 40-1338 ROUTE #22
PLATTSBURGH, N.Y. 12901
518-561-4061

customer
ENCOMPASS DEVELOP
DESIGN CONSTRUCTION

project
AKWESASNE MOHAWK
HOTEL
873 STATE HIGHWAY 37
AKWESASNE NY

sheet
4B50

Global Detailing Inc

Global Detailing, Inc.

# BILL OF MATERIAL

| LIFT NO. | LIFT QTY. | NO. OF PIECES | PIECE MARK | MATERIAL | LENGTH FT. | LENGTH IN. | REMARKS | WEIGHT TOTAL |
|---|---|---|---|---|---|---|---|---|
| 4 | 1 | ONE | 4B49 | BEAM | | | | 3826 |
| | | 1 | 4B49 | W12x87 | 30 | 4½ | A992 | 2620 |
| | | 2 | B3-9 | L4x3½x5/16 | 0 | 8½ | A572-50 | 11 |
| | | 1 | a86 | L4x3½x5/16 | 0 | 7 | A572-50 | 4 |
| | | 1 | a87 | L4x3½x5/16 | 0 | 7 | A572-50 | 4 |
| | | 1 | bp2 | BPL½x14 9/16 | 9 | 2½ | BENT A572-50 | 228 |
| | | 1 | bp64 | BPL½x14 9/16 | 9 | 0 7/16 | BENT A572-50 | 223 |
| | | 1 | p180 | PL½x8¾ | 29 | 0½ | A572-50 | 432 |
| | | 1 | p245 | PL½x8¾ | 6 | 8⅝ | A572-50 | 100 |
| | | 1 | p241 | PL½x8¾ | 2 | 9 | A572-50 | 41 |
| | | 26 | p486 | PL⅜x5 13/16 | 0 | 9 3/16 | A572-50 | 146 |
| | | 12 | p8 | PL⅜x2 | 0 | 2 | A572-50 | 5 |
| | | 12 | ss6 | WS¾ | 0 | 4 | A108 | 6 |
| | | 2 | | 1 Dia A325SC | 0 | 2½ | 1HD WASH | 3 |
| | | 3 | | ¾ Dia A325N | 0 | 2¼ | 1HD WASH | 2 |
| | | | | | | | | |
| | | | | FIELD BOLTS | | | | |
| | | 4 | | 1 Dia A490SC | 0 | 2¾ | 1HD WASH | |
| | | 2 | | ¾ Dia A325N | 0 | 2 | 1HD WASH | |
| | | | | | | | Total weight : | |

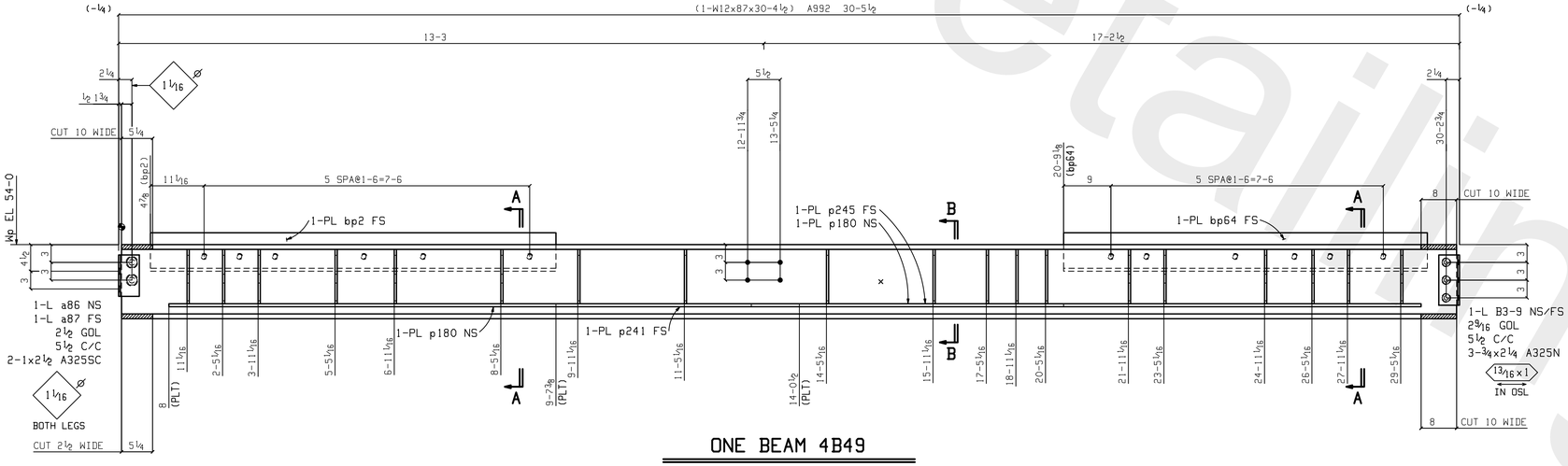


## ONE BEAM 4B49

| | |
|---|---|
| W | 12½x½ |
| F | 12⅛x13/16 |
| K | 1 11/16x1⅛ |

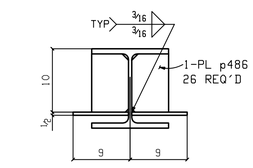


## Section B-B

4B49

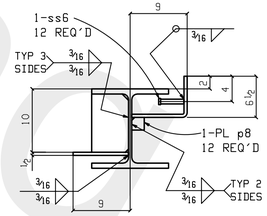


## Section A-A

4B49

HOLES: 13/16" DIA U.N.O.
SURFACE PREP: SSPC-SP 3
FINISH: **NONE**
ELECTRODES: E70XX-(LOW HYDROGEN)

GENERAL NOTES:

ALL DIMENSIONS FROM END OF MAIN MATERIAL UNLESS NOTED.
ALL VERTICAL SPACING OF HOLES TO BE 3" UNLESS NOTED.
ALL COPES TO HAVE ½" MINIMUM RADIUS.
CHARGES FOR CORRECTIVE WORK WILL NOT BE HONORED UNLESS PREVIOUS APPROVAL IS OBTAINED FROM JEFFORDS STEEL AND ENGINEERING COMPANY
MEMBERS ARE TO BE ERECTED SO THAT MARKED END IS IN THE SAME LOCATION AS ON THE E DWG
ON SHOP BOLTED CLIP ANGLES ON BEAMS: ON PC MARK END, INSERT SHOP BOLTS SO THE HEAD OF THE BOLT IS ON THE NEAR SIDE OF BEAM. IN THE NON-PC MARK END, INSERT BOLTS SO THE HEAD OF THE BOLT IS ON THE FAR SIDE OF BEAM.

DRAWINGS PREPARED BY, GLOBAL DETAILING, INC. JOB # 12-396

print record

| | | | | | |
|---|---|---|---|---|---|
| | APPFAB | 5.11.12 | | | |
| 1 | | | | | |

job no. 4503
date Jan 14 2015
drawn by MC
checked by GBI

revisions

| rev# | date | description |
|---|---|---|
| | | |

Jeffords
STEEL AND ENGINEERING COMPANY
P.O. BOX 40-1338 ROUTE #22
PLATTSBURGH, N.Y. 12901
518-561-4061

customer
ENCOMPASS DEVELOP
DESIGN CONSTRUCTION

project
AKWESASNE MOHAWK
HOTEL
873 STATE HIGHWAY 37
AKWESASNE NY

sheet
4B49

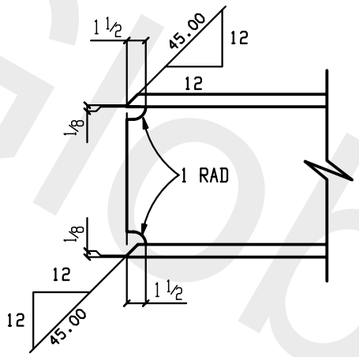


TYP WELD PREP

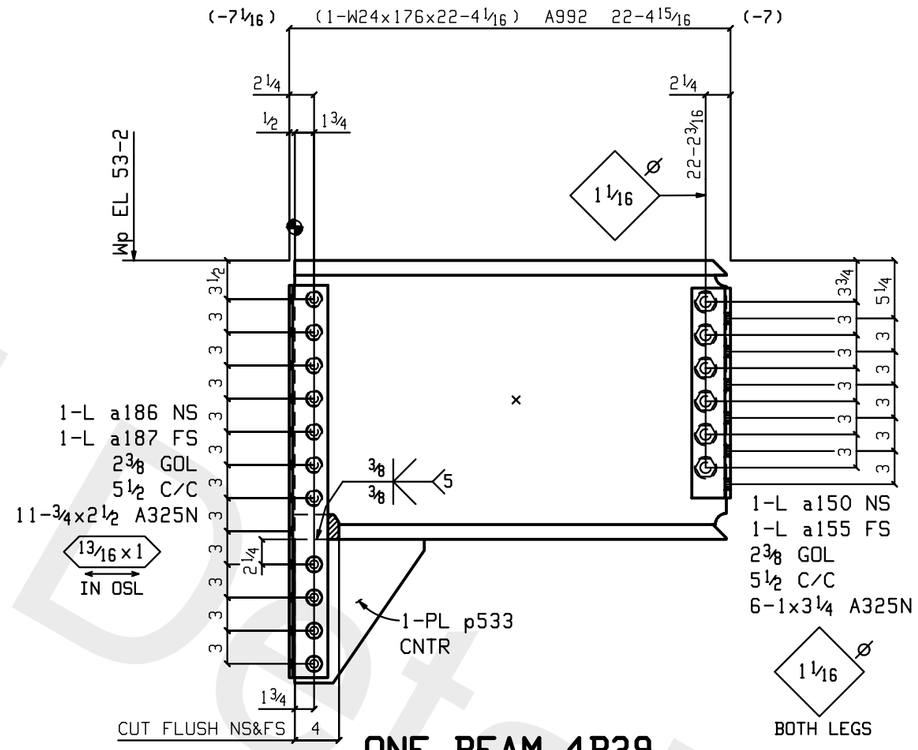


ONE BEAM 4B39

| | |
|---|---|
| W | 25 1/4 x 3/4 |
| F | 12 7/8 x 15/16 |
| K | 2 1/4 x 15/16 |

FIELD BOLTS:
(12) 1"DIA. A325Nx2 1/2 LG. 1HD WASH
(24) 3/4"DIA. A325Nx2 1/4 LG. 1HD WASH

## BILL OF MATERIAL

| LIFT NO. | LIFT QTY. | NO. OF PIECES | PIECE MARK | MATERIAL | LENGTH FT. | LENGTH IN. | REMARKS | WEIGHT TOTAL |
|---|---|---|---|---|---|---|---|---|
| 4 | 1 | ONE | 4B39 | BEAM | | | | 4022 |
| | | 1 | 4B39 | W24x176 | 22 | 4 1/16 | A992 | 3905 |
| | | 1 | a150 | L4x3 1/2x1/2 | 1 | 7 | A572-50 | 17 |
| | | 1 | a155 | L4x3 1/2x1/2 | 1 | 7 | A572-50 | 17 |
| | | 1 | a186 | L4x3 1/2x5/16 | 2 | 11 1/2 | A572-50 | 22 |
| | | 1 | a187 | L4x3 1/2x5/16 | 2 | 11 1/2 | A572-50 | 22 |
| | | 1 | p533 | PL 3/4x11 3/4 | 1 | 1 | A572-50 | 21 |
| | | 6 | | 1 Dia A325N | 0 | 3 1/4 | 1HD WASH | 10 |
| | | 11 | | 3/4 Dia A325N | 0 | 2 1/2 | 1HD WASH | 4022 8 |

FIELD BOLTS

HOLES: 13/16" DIA U.N.O.
SURFACE PREP: SSPC-SP 3
FINISH: NONE
ELECTRODES: E70XX-(LOW HYDROGEN)

GENERAL NOTES:

ALL DIMENSIONS FROM END OF MAIN MATERIAL U/N.
ALL VERTICAL SPACING OF HOLES TO BE 3" U/N.
ALL COPES TO HAVE 1/2" MINIMUM RADIUS.

CHARGES FOR CORRECTIVE WORK WILL NOT BE HONORED UNLESS PREVIOUS APPROVAL IS OBTAINED FROM JEFFORDS STEEL AND ENGINEERING COMPANY.

MEMBERS ARE TO BE ERECTED SO THAT MARKED END IS IN THE SAME LOCATION AS ON THE ERECTION DRAWING.

ON SHOP BOLTED CLIP ANGLES ON BEAMS: ON PIECE MARK END, INSERT SHOP BOLTS SO THE HEAD OF THE BOLT IS ON THE NEAR SIDE OF BEAM. ON THE NON-PIECE MARK END, INSERT BOLTS SO THE HEAD OF THE BOLT IS ON THE FAR SIDE OF BEAM.

REVISIONS

| rev# | date | description |
|---|---|---|
| | | |

| | |
|---|---|
| job no. | 4503 |
| date | Jan 14 201 |
| drawn by | MC |
| checked by | GDI |

PRINT RECORD

| 1 | APP/FAB | 5.11.12 |
|---|---|---|
| | | |

DRAWINGS PREPARED BY,
GLOBAL DETAILING, INC.
JOB # 12-396

customer
ENCOMPASS DEVELOP
DESIGN CONSTRUCTION

Jeffords
STEEL AND ENGINEERING COMPANY
P.O. BOX 40-4398 ROUTE #22
PLATTSBURGH, N.Y 12901
518-561-4061

project
AKWESASNE MOHAWK
HOTEL
873 STATE HIGHWAY 37
AKWESASNE, NY

4B39

Global Detailing Inc

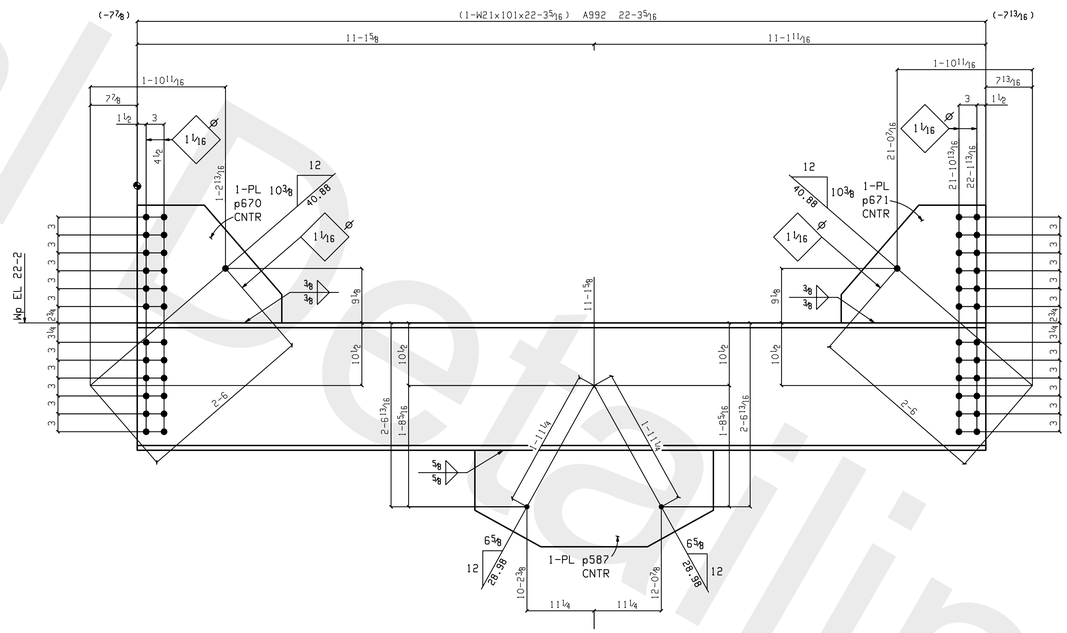


## ONE BEAM 1B92

| | |
|---|---|
| W | 21 3/8 x 1/2 |
| F | 12 5/16 x 13/16 |
| K | 11 11/16 x 1 1/8 |

DRAWINGS PREPARED BY,
GLOBAL DETAILING, INC.
JOB # 12-396

# BILL OF MATERIAL

| LIFT NO. | LIFT QTY. | NO. OF PIECES | PIECE MARK | MATERIAL | LENGTH FT. | LENGTH IN. | REMARKS | WEIGHT TOTAL |
|---|---|---|---|---|---|---|---|---|
| 1 | 1 | ONE | 1B92 | BEAM | | | | 2516 |
| | | 1 | 1B92 | W21x101 | 22 | 3 5/16 | A992 | 2247 |
| | | 1 | p587 | PL1x16 3/16 | 3 | 4 | A572-50 | 164 |
| | | 1 | p670 | PL 1/2x19 3/4 | 2 | 0 1/4 | A572-50 | 52 |
| | | 1 | p671 | PL 1/2x19 3/4 | 2 | 0 1/4 | A572-50 | 52 |
| | | | | | | | | |
| | | | | FIELD BOLTS | | | | |
| | | 48 | | 1 Dia A490SC | 0 | 2 3/4 | 1HD WASH | |

Total weight :

HOLES: 13/16" DIA U.N.O.
SURFACE PREP: SSPC-SP 2
FINISH: **NONE**
ELECTRODES: E70XX-(LOW HYDROGEN)

GENERAL NOTES:

ALL DIMENSIONS FROM END OF MAIN MATERIAL UNLESS NOTED.
ALL VERTICAL SPACING OF HOLES TO BE 3" UNLESS NOTED.
ALL COPES TO HAVE 1/2" MINIMUM RADIUS.

CHARGES FOR CORRECTIVE WORK WILL NOT BE HONORED UNLESS PREVIOUS APPROVAL IS OBTAINED FROM JEFFORDS STEEL AND ENGINEERING COMPANY

MEMBERS ARE TO BE ERECTED SO THAT MARKED END IS IN THE SAME LOCATION AS ON THE E DWG

ON SHOP BOLTED CLIP ANGLES ON BEAMS: ON PC MARK END, INSERT SHOP BOLTS SO THE HEAD OF THE BOLT IS ON THE NEAR SIDE OF BEAM. IN THE NON-PC MARK END, INSERT BOLTS SO THE HEAD OF THE BOLT IS ON THE FAR SIDE OF BEAM.

print record
WP #23

job no. 4503
date Jan 14 2015
drawn by MC
checked by -

revisions

| rev# | date | description |
|---|---|---|
| | | |


Jeffords
STEEL AND ENGINEERING COMPANY
P.O. BOX 40-1338 ROUTE #22
PLATTSBURGH, N.Y. 12901
518-561-4061


customer
ENCOMPASS DEVELOP
DESIGN CONSTRUCTION

project
AKWESASNE MOHAWK
HOTEL
873 STATE HIGHWAY 37
AKWESASNE NY

sheet
1B92

Global Detailing Inc

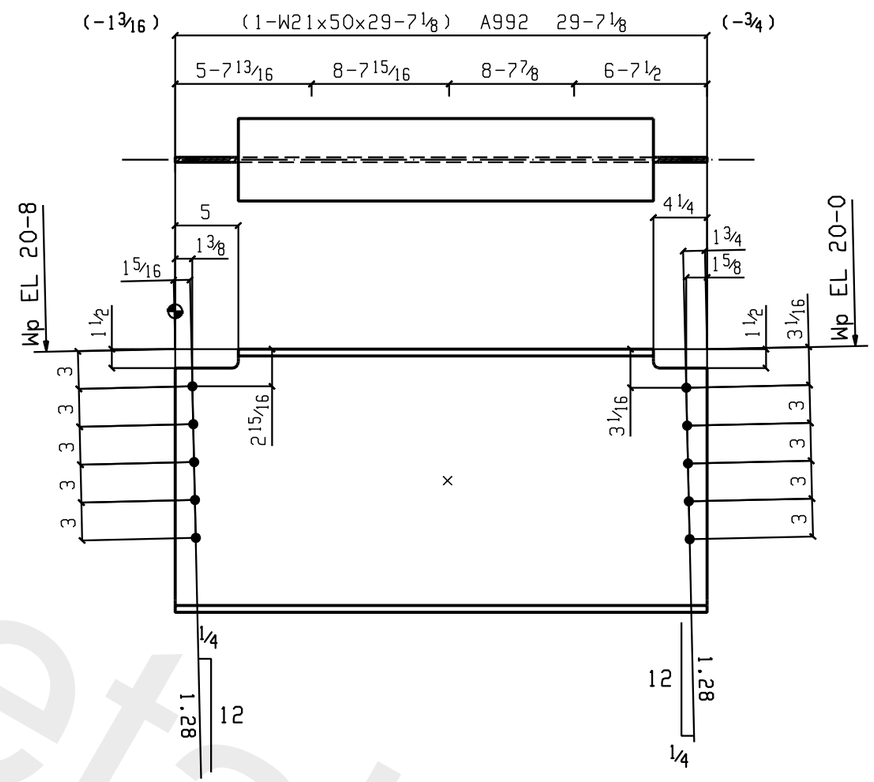


# ONE BEAM 1B115

| | |
|---|---|
| W | 20 13/16 x 3/8 |
| F | 6 1/2 x 9/16 |
| K | 1 1/4 x 7/8 |

## BILL OF MATERIAL

| LIFT NO. | LIFT QTY. | NO. OF PIECES | PIECE MARK | MATERIAL | LENGTH FT. | LENGTH IN. | REMARKS | WEIGHT TOTAL |
|---|---|---|---|---|---|---|---|---|
| 1 | 1 | ONE | 1B115 | BEAM | | | | 1468 |
| | | 1 | 1B115 | W21x50 | 29 | 7 1/8 | A992 | 1468 |
| | | | | | | | | |
| | | | | FIELD BOLTS | | | | |
| | | 10 | | 3/4 Dia A325N | 0 | 2 | 1HD WASH | |
| | | | | | | | | |
| | | | | | | | | |
| | | | | | | | | |
| | | | | | | | | 1468 |

HOLES: 13/16" DIA U.N.O.
SURFACE PREP: SSPC-SP 2
FINISH: **PPG COATING 94-232**
ELECTRODES: E70XX-(LOW HYDROGEN)

GENERAL NOTES:

ALL DIMENSIONS FROM END OF MAIN MATERIAL U/N.
ALL VERTICAL SPACING OF HOLES TO BE 3" U/N.
ALL COPES TO HAVE 1/2" MINIMUM RADIUS.

CHARGES FOR CORRECTIVE WORK WILL NOT BE HONORED UNLESS PREVIOUS APPROVAL IS OBTAINED FROM JEFFORDS STEEL AND ENGINEERING COMPANY.

MEMBERS ARE TO BE ERECTED SO THAT MARKED END IS IN THE SAME LOCATION AS ON THE ERECTION DRAWING.

ON SHOP BOLTED CLIP ANGLES ON BEAMS: ON PIECE MARK END, INSERT SHOP BOLTS SO THE HEAD OF THE BOLT IS ON THE NEAR SIDE OF BEAM. ON THE NON-PIECE MARK END, INSERT BOLTS SO THE HEAD OF THE BOLT IS ON THE FAR SIDE OF BEAM.

REVISIONS

| rev# | date | description |
|---|---|---|
| | | |

| | |
|---|---|
| job no. | 4497 |
| date | Feb 21 201 |
| drawn by | TC |
| checked by | GD |

PRINT RECORD

| | | |
|---|---|---|
| APP-1-6 | | |
| FAB 2-21 | | |

DRAWINGS PREPARED BY,
GLOBAL DETAILING, INC.
JOB # 11-390

customer
ENCOMPASS DEVELOP
DESIGN CONSTRUCTION

Jeffords
STEEL AND ENGINEERING COMPANY
P.O. BOX 40-4398 ROUTE #22
PLATTSBURGH,N.Y 12901
518-561-4061

project
AKWESASNE MOHAWK
CASINO
873 STATE HIGHWAY 37
AKWESASNE, NY

1B115

Global Detailing Inc

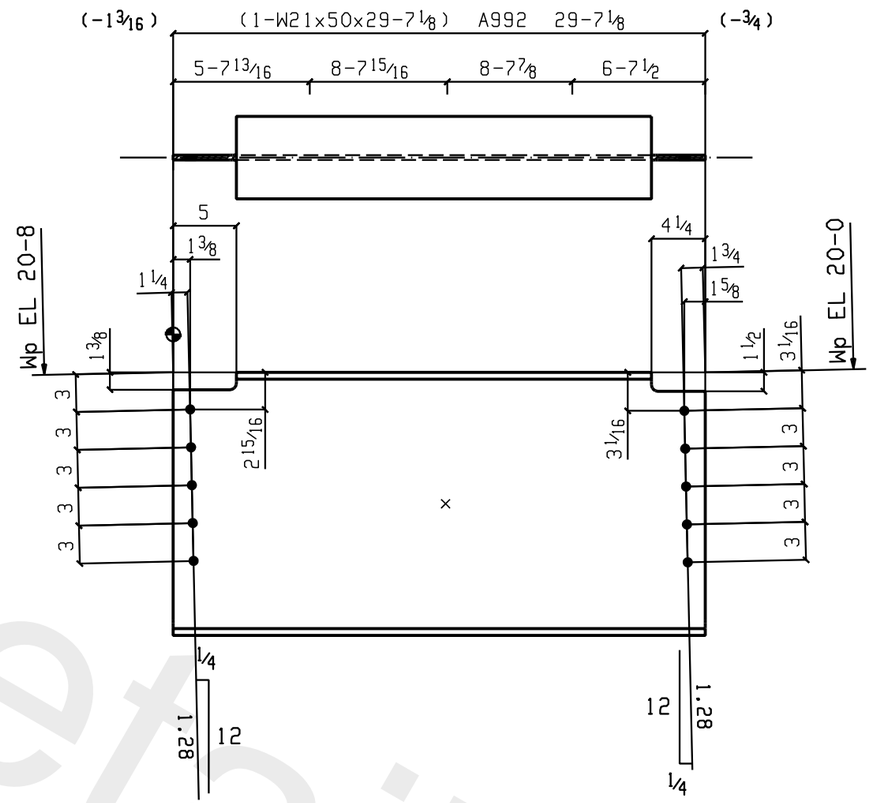


# 3 BEAMS 1B117

| | |
|---|---|
| W | 20 13/16 x 3/8 |
| F | 6 1/2 x 9/16 |
| K | 1 1/4 x 7/8 |

## BILL OF MATERIAL

| LIFT NO. | LIFT QTY. | NO. OF PIECES | PIECE MARK | MATERIAL | LENGTH FT. | LENGTH IN. | REMARKS | WEIGHT TOTAL |
|---|---|---|---|---|---|---|---|---|
| 1 | 3 | 3 | 1B117 | BEAM | | | | 4405 |
| | | 3 | 1B117 | W21x50 | 29 | 7 1/8 | A992 | 4405 |
| | | | | | | | | |
| | | | | FIELD BOLTS | | | | |
| | | 30 | | 3/4 Dia A325N | 0 | 2 | 1HD WASH | |
| | | | | | | | | |
| | | | | | | | | |
| | | | | | | | | |
| | | | | | | | | 4405 |

HOLES: 13/16" DIA U.N.O.
SURFACE PREP: SSPC-SP 2
FINISH: **PPG COATING 94-232**
ELECTRODES: E70XX-(LOW HYDROGEN)

GENERAL NOTES:

ALL DIMENSIONS FROM END OF MAIN MATERIAL U/N.
ALL VERTICAL SPACING OF HOLES TO BE 3" U/N.
ALL COPES TO HAVE 1/2" MINIMUM RADIUS.

CHARGES FOR CORRECTIVE WORK WILL NOT BE HONORED UNLESS PREVIOUS APPROVAL IS OBTAINED FROM JEFFORDS STEEL AND ENGINEERING COMPANY.

MEMBERS ARE TO BE ERECTED SO THAT MARKED END IS IN THE SAME LOCATION AS ON THE ERECTION DRAWING.

ON SHOP BOLTED CLIP ANGLES ON BEAMS: ON PIECE MARK END, INSERT SHOP BOLTS SO THE HEAD OF THE BOLT IS ON THE NEAR SIDE OF BEAM. ON THE NON-PIECE MARK END, INSERT BOLTS SO THE HEAD OF THE BOLT IS ON THE FAR SIDE OF BEAM.

REVISIONS

| rev# | date | description |
|---|---|---|
| | | |

| | |
|---|---|
| job no. | 4497 |
| date | Feb 21 201 |
| drawn by | TC |
| checked by | GD |

PRINT RECORD

| | | |
|---|---|---|
| APP-1-6 | | |
| FAB 2-21 | | |

DRAWINGS PREPARED BY,
GLOBAL DETAILING, INC.
JOB # 11-390

customer
ENCOMPASS DEVELOP
DESIGN CONSTRUCTION

Jeffords
STEEL AND ENGINEERING COMPANY
P.O. BOX 40-4398 ROUTE #22
PLATTSBURGH,N.Y 12901
518-561-4061

project
AKWESASNE MOHAWK
CASINO
873 STATE HIGHWAY 37
AKWESASNE, NY

1B117

Global Detailing Inc

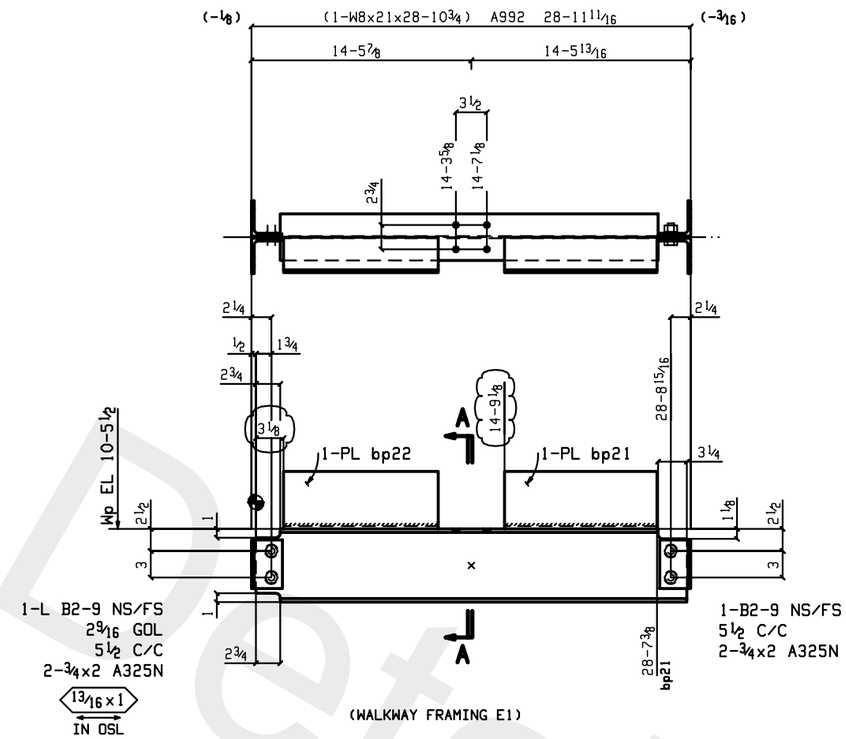


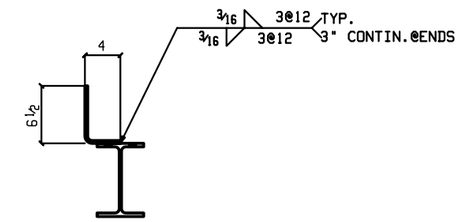


**Section A-A**
1B16

## ONE BEAM 1B16

| | |
|---|---|
| W | 8 1/4 x 1/4 |
| F | 5 1/4 x 3/8 |
| K | 7/8 x 5/8 |

## BILL OF MATERIAL

| LIFT NO. | LIFT QTY. | NO. OF PIECES | PIECE MARK | MATERIAL | LENGTH FT. | LENGTH IN. | REMARKS | WEIGHT TOTAL |
|---|---|---|---|---|---|---|---|---|
| 1 | 1 | ONE | 1B16 | BEAM | | | | 909 |
| | | 1 | 1B16 | W8x21 | 28 | 10 3/4 | A992 | 601 |
| | | 4 | B2-9 | L4x3 1/2x5/16 | 0 | 5 1/2 | A572-50 | 14 |
| | | 1 | bp22 | BPL 5/16x9 7/8 | 13 | 10 1/2 | BENT A572-50 | 146 |
| | | 1 | bp21 | BPL 5/16x9 7/8 | 13 | 10 1/4 | BENT A572-50 | 146 |
| | | 4 | | 3/4 Dia A325N | 0 | 2 | 1HD WASH | 3 |
| | | | | | | | | |
| | | | | FIELD BOLTS | | | | |
| | | 8 | | 3/4 Dia A325N | 0 | 2 | 1HD WASH | 909 |
| | | 4 | | 3/4 Dia A325N | 0 | 1 3/4 | 1HD WASH | |

HOLES: 13/16" DIA U.N.O.
SURFACE PREP: SSPC-SP 2
FINISH: **PPG COATING 94-232**
ELECTRODES: E70XX-(LOW HYDROGEN)

GENERAL NOTES:

ALL DIMENSIONS FROM END OF MAIN MATERIAL U/N.
ALL VERTICAL SPACING OF HOLES TO BE 3" U/N.
ALL COPES TO HAVE 1/2" MINIMUM RADIUS.

CHARGES FOR CORRECTIVE WORK WILL NOT BE HONORED UNLESS PREVIOUS APPROVAL IS OBTAINED FROM JEFFORDS STEEL AND ENGINEERING COMPANY.

MEMBERS ARE TO BE ERECTED SO THAT MARKED END IS IN THE SAME LOCATION AS ON THE ERECTION DRAWING.

ON SHOP BOLTED CLIP ANGLES ON BEAMS: ON PIECE MARK END, INSERT SHOP BOLTS SO THE HEAD OF THE BOLT IS ON THE NEAR SIDE OF BEAM. ON THE NON-PIECE MARK END, INSERT BOLTS SO THE HEAD OF THE BOLT IS ON THE FAR SIDE OF BEAM.

REVISIONS

| rev# | date | description |
|---|---|---|
| 1 | 2-9 | ADDED DIMENSIONS |

| | |
|---|---|
| job no. | 4497 |
| date | Nov 21 201 |
| drawn by | TC |
| checked by | GDI |

PRINT RECORD
APP-1-4
FAB 2-7

DRAWINGS PREPARED BY,
GLOBAL DETAILING, INC.
JOB # 11-390

customer
ENCOMPASS DEVELOP
DESIGN CONSTRUCTION

Jeffords
STEEL AND ENGINEERING COMPANY
P.O. BOX 40-4398 ROUTE #22
PLATTSBURGH,N.Y 12901
518-561-4061

project
AKWESASNE MOHAWK
CASINO
873 STATE HIGHWAY 37
AKWESASNE, NY

1B16

Global Detailing Inc

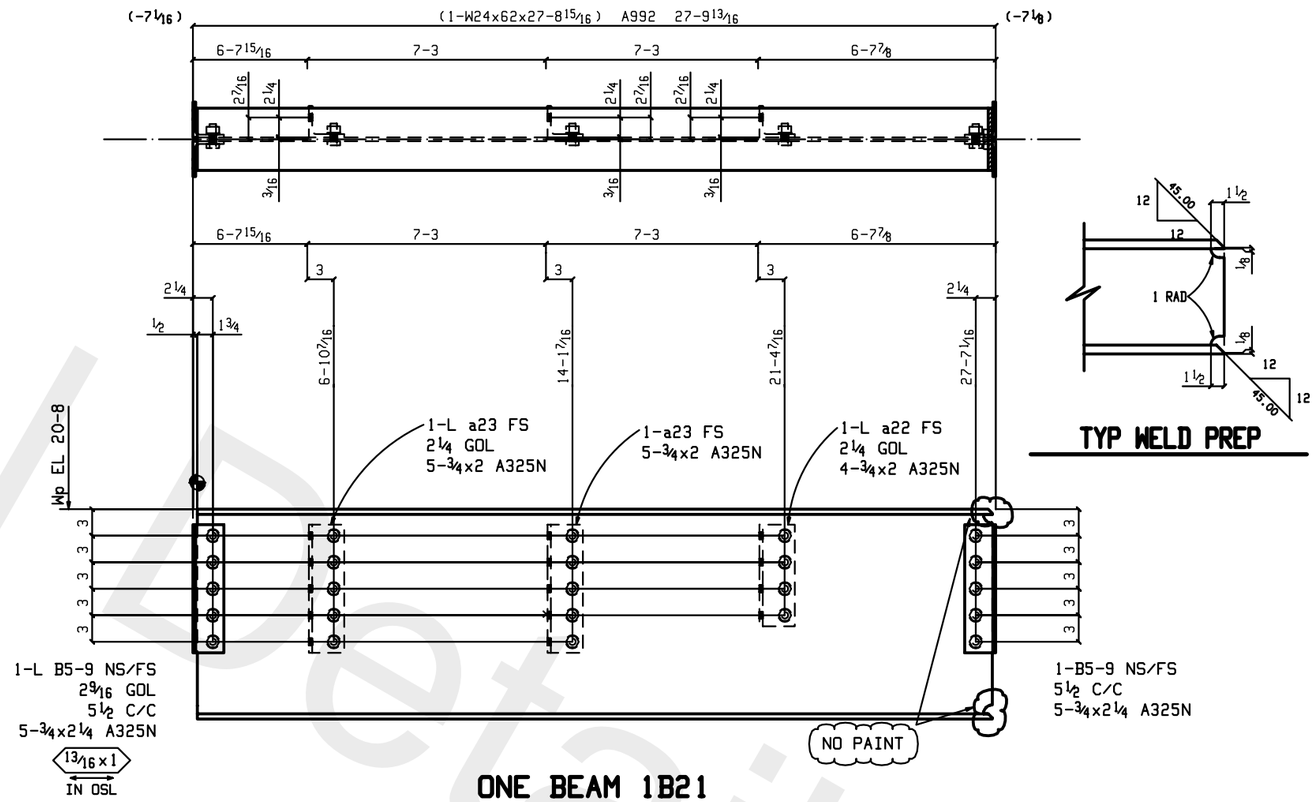


## ONE BEAM 1B21

| | |
|---|---|
| W | 23 3/4 x 7/16 |
| F | 7 1/16 x 9/16 |
| K | 1 1/2 x 1 1/8 |

## BILL OF MATERIAL

| LIFT NO. | LIFT QTY. | NO. OF PIECES | PIECE MARK | MATERIAL | LENGTH FT. | LENGTH IN. | REMARKS | WEIGHT TOTAL |
|---|---|---|---|---|---|---|---|---|
| 1 | 1 | ONE | 1B21 | BEAM | | | PREP | 1800 |
| | | 1 | 1B21 | W24x62 | 27 | 8 15/16 | A992 | 1718 |
| | | 2 | a23 | L4x3 1/2x3/8 | 1 | 2 1/2 | A572-50 | 21 |
| | | 1 | a22 | L4x3 1/2x3/8 | 0 | 11 1/2 | A572-50 | 8 |
| | | 4 | B5-9 | L4x3 1/2x5/16 | 1 | 2 1/2 | A572-50 | 37 |
| | | 10 | | 3/4 Dia A325N | 0 | 2 1/4 | 1HD WASH | 7 |
| | | 14 | | 3/4 Dia A325N | 0 | 2 | 1HD WASH | 9 |
| | | | | | | | | |
| | | | | FIELD BOLTS | | | | 1800 |
| | | 20 | | 3/4 Dia A325N | 0 | 2 1/4 | 1HD WASH | |

HOLES: 13/16" DIA U.N.O.
SURFACE PREP: SSPC-SP 2
FINISH: **PPG COATING 94-232**
ELECTRODES: E70XX-(LOW HYDROGEN)

GENERAL NOTES:

ALL DIMENSIONS FROM END OF MAIN MATERIAL U/N.
ALL VERTICAL SPACING OF HOLES TO BE 3" U/N.
ALL COPES TO HAVE 1/2" MINIMUM RADIUS.

CHARGES FOR CORRECTIVE WORK WILL NOT BE HONORED UNLESS PREVIOUS APPROVAL IS OBTAINED FROM JEFFORDS STEEL AND ENGINEERING COMPANY.

MEMBERS ARE TO BE ERECTED SO THAT MARKED END IS IN THE SAME LOCATION AS ON THE ERECTION DRAWING.

ON SHOP BOLTED CLIP ANGLES ON BEAMS: ON PIECE MARK END, INSERT SHOP BOLTS SO THE HEAD OF THE BOLT IS ON THE NEAR SIDE OF BEAM. ON THE NON-PIECE MARK END, INSERT BOLTS SO THE HEAD OF THE BOLT IS ON THE FAR SIDE OF BEAM.

REVISIONS

| rev# | date | description |
|---|---|---|
| 1 | 2-9 | ADDED DIMENSIONS |

| | |
|---|---|
| job no. | 4497 |
| date | Nov 21 201 |
| drawn by | TC |
| checked by | GDI |

PRINT RECORD
APP-1-4
FAB 2-7

DRAWINGS PREPARED BY,
GLOBAL DETAILING, INC.
JOB # 11-390

customer
ENCOMPASS DEVELOP
DESIGN CONSTRUCTION

Jeffords
STEEL AND ENGINEERING COMPANY
P.O. BOX 40-4398 ROUTE #22
PLATTSBURGH, N.Y 12901
518-561-4061

project
AKWESASNE MOHAWK
CASINO
873 STATE HIGHWAY 37
AKWESASNE, NY

1B21

Global Detailing Inc

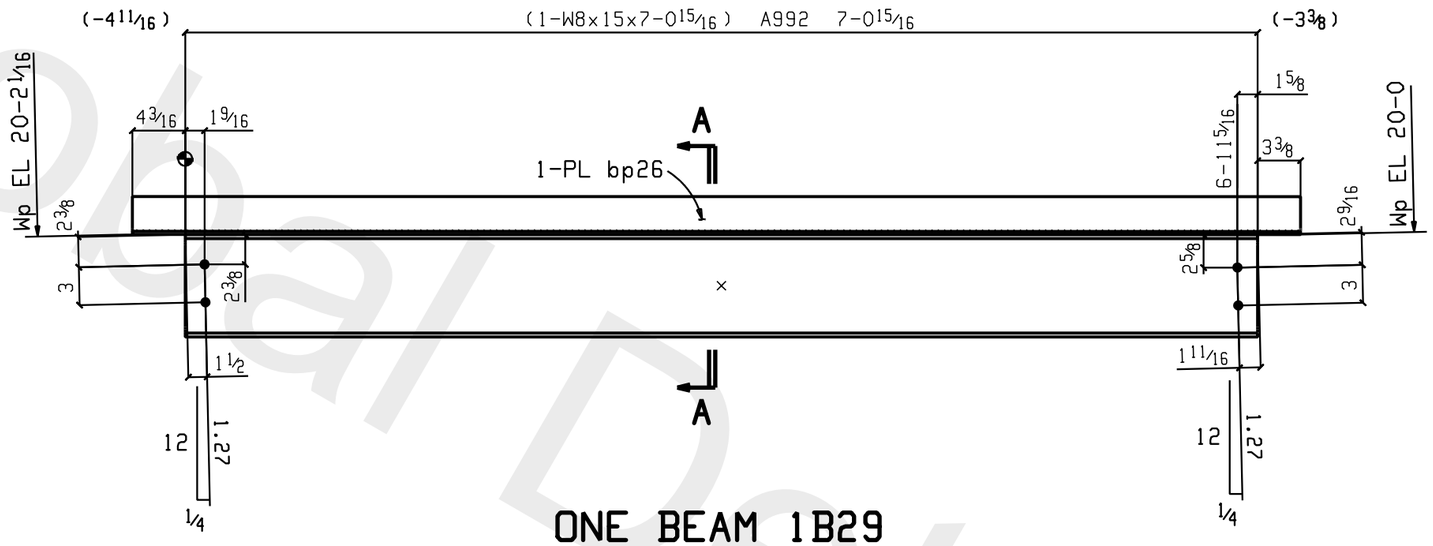


# ONE BEAM 1B29

| | |
|---|---|
| W | 8 1/8 x 1/4 |
| F | 4 x 5/16 |
| K | 13/16 x 5/8 |

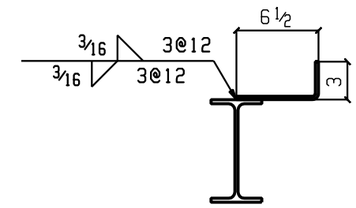


## Section A-A

1B29

## BILL OF MATERIAL

| LIFT NO. | LIFT QTY. | NO. OF PIECES | PIECE MARK | MATERIAL | LENGTH FT. | LENGTH IN. | REMARKS | WEIGHT TOTAL |
|---|---|---|---|---|---|---|---|---|
| 1 | 1 | ONE | 1B29 | BEAM | | | | 166 |
| | | 1 | 1B29 | W8x15 | 7 | 0 15/16 | A992 | 106 |
| | | 1 | bp26 | BPL 1/4x9 1/16 | 7 | 8 1/2 | BENT A572-50 | 60 |
| | | | | | | | | |
| | | | | FIELD BOLTS | | | | |
| | | 4 | | 3/4 Dia A325N | 0 | 1 3/4 | 1HD WASH | |
| | | | | | | | | |
| | | | | | | | | |
| | | | | | | | | 166 |

HOLES: 13/16" DIA U.N.O.
SURFACE PREP: SSPC-SP 2
FINISH: **PPG COATING 94-232**
ELECTRODES: E70XX-(LOW HYDROGEN)

GENERAL NOTES:

ALL DIMENSIONS FROM END OF MAIN MATERIAL U/N.
ALL VERTICAL SPACING OF HOLES TO BE 3" U/N.
ALL COPES TO HAVE 1/2" MINIMUM RADIUS.

CHARGES FOR CORRECTIVE WORK WILL NOT BE HONORED UNLESS PREVIOUS APPROVAL IS OBTAINED FROM JEFFORDS STEEL AND ENGINEERING COMPANY.

MEMBERS ARE TO BE ERECTED SO THAT MARKED END IS IN THE SAME LOCATION AS ON THE ERECTION DRAWING.

ON SHOP BOLTED CLIP ANGLES ON BEAMS: ON PIECE MARK END, INSERT SHOP BOLTS SO THE HEAD OF THE BOLT IS ON THE NEAR SIDE OF BEAM. ON THE NON-PIECE MARK END, INSERT BOLTS SO THE HEAD OF THE BOLT IS ON THE FAR SIDE OF BEAM.

REVISIONS

| rev# | date | description |
|---|---|---|
| | | |

| | |
|---|---|
| job no. | 4497 |
| date | Feb 22 201 |
| drawn by | TC |
| checked by | GDI |

PRINT RECORD

| | | |
|---|---|---|
| APP-1-4 | | |
| FAB 2-22 | | |

DRAWINGS PREPARED BY,
GLOBAL DETAILING, INC.
JOB # 11-390

customer
ENCOMPASS DEVELOP
DESIGN CONSTRUCTION

Jeffords
STEEL AND ENGINEERING COMPANY
P.O. BOX 40-4398 ROUTE #22
PLATTSBURGH,N.Y 12901
518-561-4061

project
AKWESASNE MOHAWK
CASINO
873 STATE HIGHWAY 37
AKWESASNE, NY

1B29

Global Detailing Inc

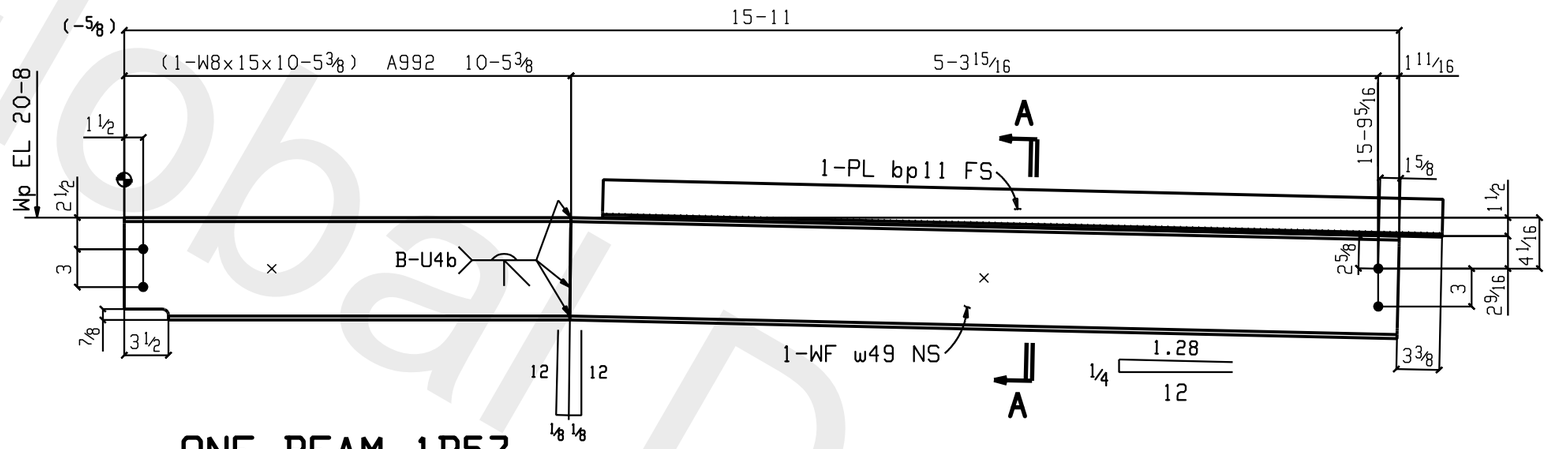


# ONE BEAM 1B57

| | |
|---|---|
| W | 8 1/8 x 1/4 |
| F | 4 x 5/16 |
| K | 13/16 x 5/8 |

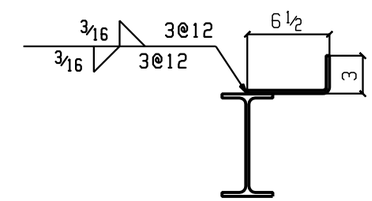


## Section A-A

1B57

## BILL OF MATERIAL

| LIFT NO. | LIFT QTY. | NO. OF PIECES | PIECE MARK | MATERIAL | LENGTH FT. | LENGTH IN. | REMARKS | WEIGHT TOTAL |
|---|---|---|---|---|---|---|---|---|
| 1 | 1 | ONE | 1B57 | BEAM | | | | 280 |
| | | 1 | 1B57 | W8x15 | 10 | 5 3/8 | A992 | 155 |
| | | 1 | w49 | W8x15 | 5 | 5 5/8 | B1E A992 | 82 |
| | | 1 | bp11 | BPL 1/4x9 1/16 | 5 | 6 1/2 | BENT A572-50 | 43 |
| | | | | | | | | |
| | | | | FIELD BOLTS | | | | |
| | | 2 | | 3/4 Dia A325N | 0 | 1 3/4 | 1HD WASH | |
| | | | | | | | | |
| | | | | | | | | |
| | | | | | | | | |
| | | | | | | | | 280 |

HOLES: 13/16" DIA U.N.O.
SURFACE PREP: SSPC-SP 2
FINISH: **PPG COATING 94-232**
ELECTRODES: E70XX-(LOW HYDROGEN)

GENERAL NOTES:

ALL DIMENSIONS FROM END OF MAIN MATERIAL U/N.
ALL VERTICAL SPACING OF HOLES TO BE 3" U/N.
ALL COPES TO HAVE 1/2" MINIMUM RADIUS.

CHARGES FOR CORRECTIVE WORK WILL NOT BE HONORED UNLESS PREVIOUS APPROVAL IS OBTAINED FROM JEFFORDS STEEL AND ENGINEERING COMPANY.

MEMBERS ARE TO BE ERECTED SO THAT MARKED END IS IN THE SAME LOCATION AS ON THE ERECTION DRAWING.

ON SHOP BOLTED CLIP ANGLES ON BEAMS: ON PIECE MARK END, INSERT SHOP BOLTS SO THE HEAD OF THE BOLT IS ON THE NEAR SIDE OF BEAM. ON THE NON-PIECE MARK END, INSERT BOLTS SO THE HEAD OF THE BOLT IS ON THE FAR SIDE OF BEAM.

REVISIONS

| rev# | date | description |
|---|---|---|
| | | |

| | |
|---|---|
| job no. | 4497 |
| date | Feb 22 201 |
| drawn by | TC |
| checked by | GDI |

PRINT RECORD

| | | |
|---|---|---|
| APP-1-4 | | |
| FAB 2-22 | | |

DRAWINGS PREPARED BY,
GLOBAL DETAILING, INC.
JOB # 11-390

customer
ENCOMPASS DEVELOP
DESIGN CONSTRUCTION

Jeffords
STEEL AND ENGINEERING COMPANY
P.O. BOX 40-4398 ROUTE #22
PLATTSBURGH,N.Y 12901
518-561-4061

project
AKWESASNE MOHAWK
CASINO
873 STATE HIGHWAY 37
AKWESASNE, NY

1B57

Global Detailing Inc

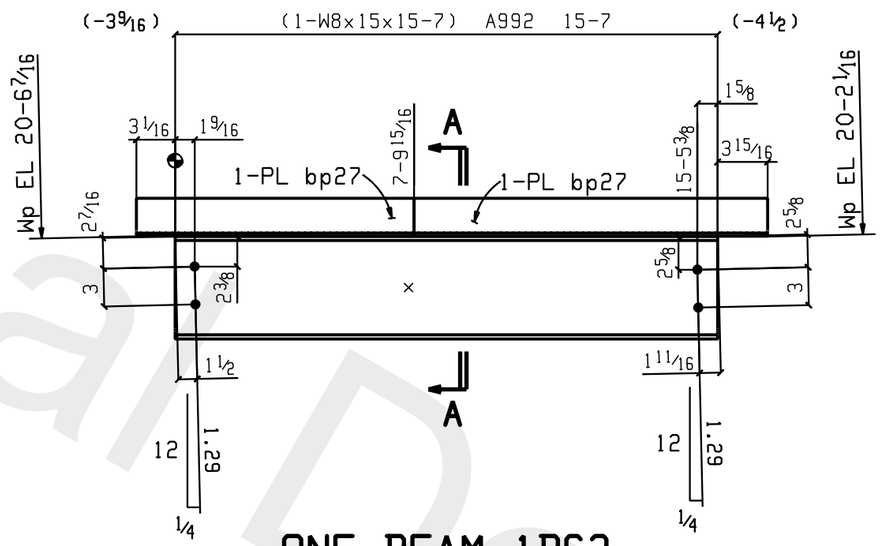


## ONE BEAM 1B63

| | |
|---|---|
| W | 8 1/8 x 1/4 |
| F | 4 x 5/16 |
| K | 13/16 x 5/8 |

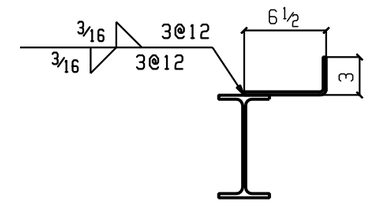


## Section A-A

1B63

## BILL OF MATERIAL

| LIFT NO. | LIFT QTY. | NO. OF PIECES | PIECE MARK | MATERIAL | LENGTH FT. | LENGTH IN. | REMARKS | WEIGHT TOTAL |
|---|---|---|---|---|---|---|---|---|
| 1 | 1 | ONE | 1B63 | BEAM | | | | 358 |
| | | 1 | 1B63 | W8x15 | 15 | 7 | A992 | 234 |
| | | 2 | bp27 | BPL 1/4x9 1/16 | 8 | 1 | BENT A572-50 | 125 |
| | | | | | | | | |
| | | | | FIELD BOLTS | | | | |
| | | 4 | | 3/4 Dia A325N | 0 | 1 3/4 | 1HD WASH | |
| | | | | | | | | |
| | | | | | | | | |
| | | | | | | | | |
| | | | | | | | | |
| | | | | | | | | 358 |

HOLES: 13/16" DIA U.N.O.
SURFACE PREP: SSPC-SP 2
FINISH: **PPG COATING 94-232**
ELECTRODES: E70XX-(LOW HYDROGEN)

GENERAL NOTES:

ALL DIMENSIONS FROM END OF MAIN MATERIAL U/N.
ALL VERTICAL SPACING OF HOLES TO BE 3" U/N.
ALL COPES TO HAVE 1/2" MINIMUM RADIUS.

CHARGES FOR CORRECTIVE WORK WILL NOT BE HONORED UNLESS PREVIOUS APPROVAL IS OBTAINED FROM JEFFORDS STEEL AND ENGINEERING COMPANY.

MEMBERS ARE TO BE ERECTED SO THAT MARKED END IS IN THE SAME LOCATION AS ON THE ERECTION DRAWING.

ON SHOP BOLTED CLIP ANGLES ON BEAMS: ON PIECE MARK END, INSERT SHOP BOLTS SO THE HEAD OF THE BOLT IS ON THE NEAR SIDE OF BEAM. ON THE NON-PIECE MARK END, INSERT BOLTS SO THE HEAD OF THE BOLT IS ON THE FAR SIDE OF BEAM.

REVISIONS

| rev# | date | description |
|---|---|---|
| | | |

| | |
|---|---|
| job no. | 4497 |
| date | Feb 22 201 |
| drawn by | TC |
| checked by | GDI |

PRINT RECORD

| | | |
|---|---|---|
| APP-1-4 | | |
| FAB 2-22 | | |

DRAWINGS PREPARED BY,
GLOBAL DETAILING, INC.
JOB # 11-390

customer
ENCOMPASS DEVELOP
DESIGN CONSTRUCTION

Jeffords
STEEL AND ENGINEERING COMPANY
P.O. BOX 40-4398 ROUTE #22
PLATTSBURGH,N.Y 12901
518-561-4061

project
AKWESASNE MOHAWK
CASINO
873 STATE HIGHWAY 37
AKWESASNE, NY

1B63

Global Detailing Inc

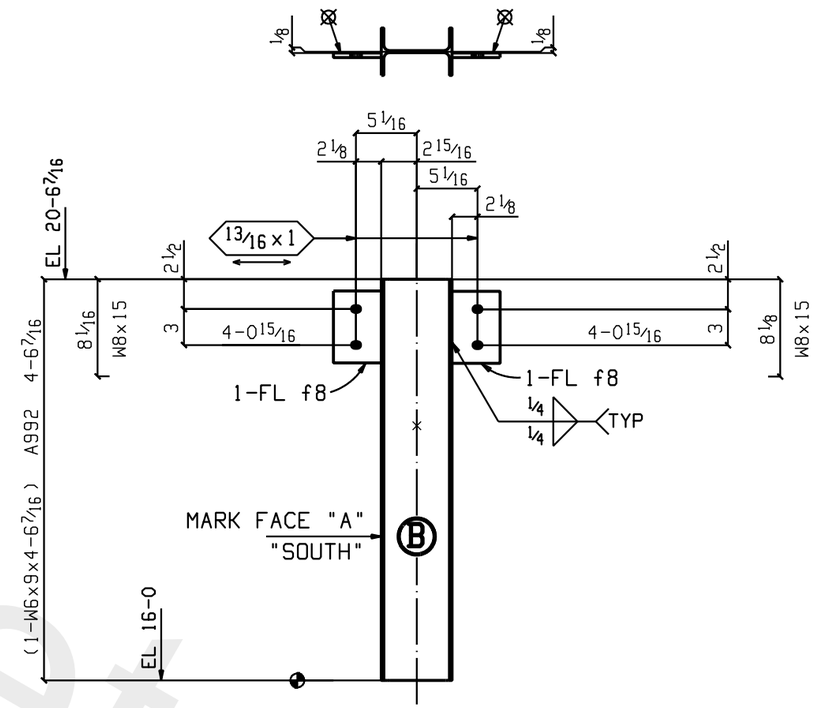


# ONE COLUMN 1C13

| | |
|---|---|
| W | 5 7/8 x 3/16 |
| F | 3 15/16 x 3/16 |
| K | 11/16 x 9/16 |

## BILL OF MATERIAL

| LIFT NO. | LIFT QTY. | NO. OF PIECES | PIECE MARK | MATERIAL | LENGTH FT. | LENGTH IN. | REMARKS | WEIGHT TOTAL |
|---|---|---|---|---|---|---|---|---|
| 1 | 1 | ONE | 1C13 | COLUMN | | | FIELD/APPL VERIFY | 46 |
| | | 1 | 1C13 | W6x9 | 4 | 6 7/16 | A992 | 41 |
| | | 2 | f8 | FL 3/8 x 4 | 0 | 6 | A572-50 | 5 |
| | | | | | | | | |
| | | | | FIELD BOLTS | | | | |
| | | 2 | | 3/4 Dia A325N | 0 | 1 3/4 | 1HD WASH | |
| | | | | | | | | |
| | | | | | | | | |
| | | | | | | | | |
| | | | | | | | | |
| | | | | | | | | 46 |

HOLES: 13/16" DIA U.N.O.
SURFACE PREP: SSPC-SP 2
FINISH: **PPG COATING 94-232**
ELECTRODES: E70XX-(LOW HYDROGEN)

GENERAL NOTES:

ALL DIMENSIONS FROM END OF MAIN MATERIAL U/N.
ALL VERTICAL SPACING OF HOLES TO BE 3" U/N.
ALL COPES TO HAVE 1/2" MINIMUM RADIUS.

CHARGES FOR CORRECTIVE WORK WILL NOT BE HONORED UNLESS PREVIOUS APPROVAL IS OBTAINED FROM JEFFORDS STEEL AND ENGINEERING COMPANY.

MEMBERS ARE TO BE ERECTED SO THAT MARKED END IS IN THE SAME LOCATION AS ON THE ERECTION DRAWING.

ON SHOP BOLTED CLIP ANGLES ON BEAMS: ON PIECE MARK END, INSERT SHOP BOLTS SO THE HEAD OF THE BOLT IS ON THE NEAR SIDE OF BEAM. ON THE NON-PIECE MARK END, INSERT BOLTS SO THE HEAD OF THE BOLT IS ON THE FAR SIDE OF BEAM.

REVISIONS

| rev# | date | description |
|---|---|---|
| | | |

| | |
|---|---|
| job no. | 4497 |
| date | Feb 22 201 |
| drawn by | TC |
| checked by | GDI |

PRINT RECORD

| | | |
|---|---|---|
| APP-1-4 | | |
| FAB 2-22 | | |

DRAWINGS PREPARED BY,
GLOBAL DETAILING, INC.
JOB # 11-390

customer
ENCOMPASS DEVELOP
DESIGN CONSTRUCTION

Jeffords
STEEL AND ENGINEERING COMPANY
P.O. BOX 40-4398 ROUTE #22
PLATTSBURGH, N.Y 12901
518-561-4061

project
AKWESASNE MOHAWK
CASINO
873 STATE HIGHWAY 37
AKWESASNE, NY

1C13

Global Detailing Inc

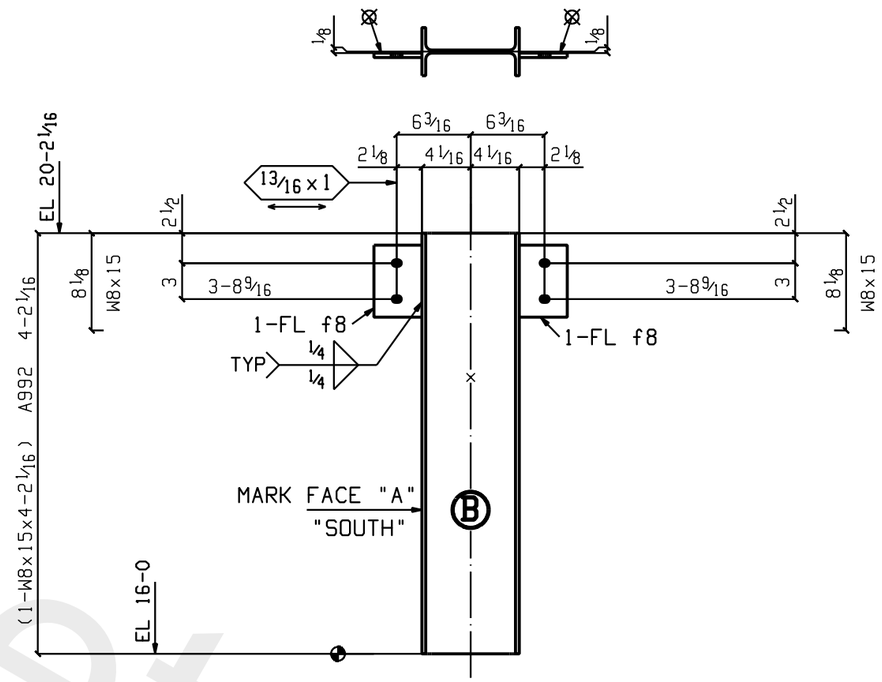


# ONE COLUMN 1C23

| | |
|---|---|
| W | 8 1/8 x 1/4 |
| F | 4 x 5/16 |
| K | 13/16 x 5/8 |

## BILL OF MATERIAL

| LIFT NO. | LIFT QTY. | NO. OF PIECES | PIECE MARK | MATERIAL | LENGTH FT. | LENGTH IN. | REMARKS | WEIGHT TOTAL |
|---|---|---|---|---|---|---|---|---|
| 1 | 1 | ONE | 1C23 | COLUMN | | | FIELD/APPL VERIFY | 67 |
| | | 1 | 1C23 | W8x15 | 4 | 2 1/16 | A992 | 63 |
| | | 2 | f8 | FL 3/8 x 4 | 0 | 6 | A572-50 | 5 |
| | | | | | | | | 67 |

HOLES: 13/16" DIA U.N.O.
SURFACE PREP: SSPC-SP 2
FINISH: **PPG COATING 94-232**
ELECTRODES: E70XX-(LOW HYDROGEN)

GENERAL NOTES:

ALL DIMENSIONS FROM END OF MAIN MATERIAL U/N.
ALL VERTICAL SPACING OF HOLES TO BE 3" U/N.
ALL COPES TO HAVE 1/2" MINIMUM RADIUS.

CHARGES FOR CORRECTIVE WORK WILL NOT BE HONORED UNLESS PREVIOUS APPROVAL IS OBTAINED FROM JEFFORDS STEEL AND ENGINEERING COMPANY.

MEMBERS ARE TO BE ERECTED SO THAT MARKED END IS IN THE SAME LOCATION AS ON THE ERECTION DRAWING.

ON SHOP BOLTED CLIP ANGLES ON BEAMS: ON PIECE MARK END, INSERT SHOP BOLTS SO THE HEAD OF THE BOLT IS ON THE NEAR SIDE OF BEAM. ON THE NON-PIECE MARK END, INSERT BOLTS SO THE HEAD OF THE BOLT IS ON THE FAR SIDE OF BEAM.

REVISIONS

| rev# | date | description |
|---|---|---|
| | | |

| | |
|---|---|
| job no. | 4497 |
| date | Feb 22 201 |
| drawn by | TC |
| checked by | CHECKER |

PRINT RECORD

| | | |
|---|---|---|
| APP-1-4 | | |
| FAB 2-22 | | |

DRAWINGS PREPARED BY,
GLOBAL DETAILING, INC.
JOB # 11-390

customer
ENCOMPASS DEVELOP
DESIGN CONSTRUCTION

Jeffords
STEEL AND ENGINEERING COMPANY
P.O. BOX 40-4398 ROUTE #22
PLATTSBURGH, N.Y 12901
518-561-4061

project
AKWESASNE MOHAWK
CASINO
873 STATE HIGHWAY 37
AKWESASNE, NY

1C23

Global Detailing Inc

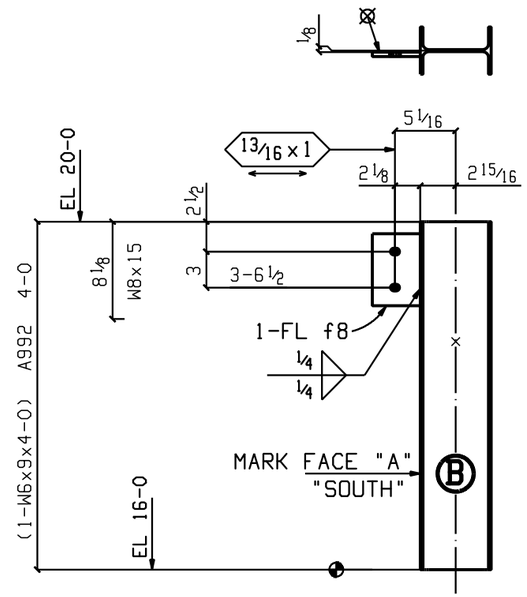


# ONE COLUMN 1C24

| | |
|---|---|
| W | $5\frac{7}{8} \times \frac{3}{16}$ |
| F | $3\frac{15}{16} \times \frac{3}{16}$ |
| K | $\frac{11}{16} \times \frac{9}{16}$ |

## BILL OF MATERIAL

| LIFT NO. | LIFT QTY. | NO. OF PIECES | PIECE MARK | MATERIAL | LENGTH FT. | LENGTH IN. | REMARKS | WEIGHT TOTAL |
|---|---|---|---|---|---|---|---|---|
| 1 | 1 | ONE | 1C24 | COLUMN | | | FIELD/APPL VERIFY | 38 |
| | | 1 | 1C24 | W6x9 | 4 | 0 | A992 | 36 |
| | | 1 | f8 | FL 3/8 x 4 | 0 | 6 | A572-50 | 2 |
| | | | | | | | | 38 |

HOLES: 13/16" DIA U.N.O.
SURFACE PREP: SSPC-SP 2
FINISH: **PPG COATING 94-232**
ELECTRODES: E70XX-(LOW HYDROGEN)

GENERAL NOTES:

ALL DIMENSIONS FROM END OF MAIN MATERIAL U/N.
ALL VERTICAL SPACING OF HOLES TO BE 3" U/N.
ALL COPES TO HAVE 1/2" MINIMUM RADIUS.

CHARGES FOR CORRECTIVE WORK WILL NOT BE HONORED UNLESS PREVIOUS APPROVAL IS OBTAINED FROM JEFFORDS STEEL AND ENGINEERING COMPANY.

MEMBERS ARE TO BE ERECTED SO THAT MARKED END IS IN THE SAME LOCATION AS ON THE ERECTION DRAWING.

ON SHOP BOLTED CLIP ANGLES ON BEAMS: ON PIECE MARK END, INSERT SHOP BOLTS SO THE HEAD OF THE BOLT IS ON THE NEAR SIDE OF BEAM. ON THE NON-PIECE MARK END, INSERT BOLTS SO THE HEAD OF THE BOLT IS ON THE FAR SIDE OF BEAM.

REVISIONS

| rev# | date | description |
|---|---|---|
| | | |

| | |
|---|---|
| job no. | 4497 |
| date | Feb 22 201 |
| drawn by | TC |
| checked by | GDI |

PRINT RECORD

| | | |
|---|---|---|
| APP-1-4 | | |
| FAB 2-22 | | |

DRAWINGS PREPARED BY,
GLOBAL DETAILING, INC.
JOB # 11-390

customer
ENCOMPASS DEVELOP
DESIGN CONSTRUCTION

Jeffords
STEEL AND ENGINEERING COMPANY
P.O. BOX 40-4398 ROUTE #22
PLATTSBURGH, N.Y 12901
518-561-4061

project
AKWESASNE MOHAWK
CASINO
873 STATE HIGHWAY 37
AKWESASNE, NY

1C24

Global Detailing Inc

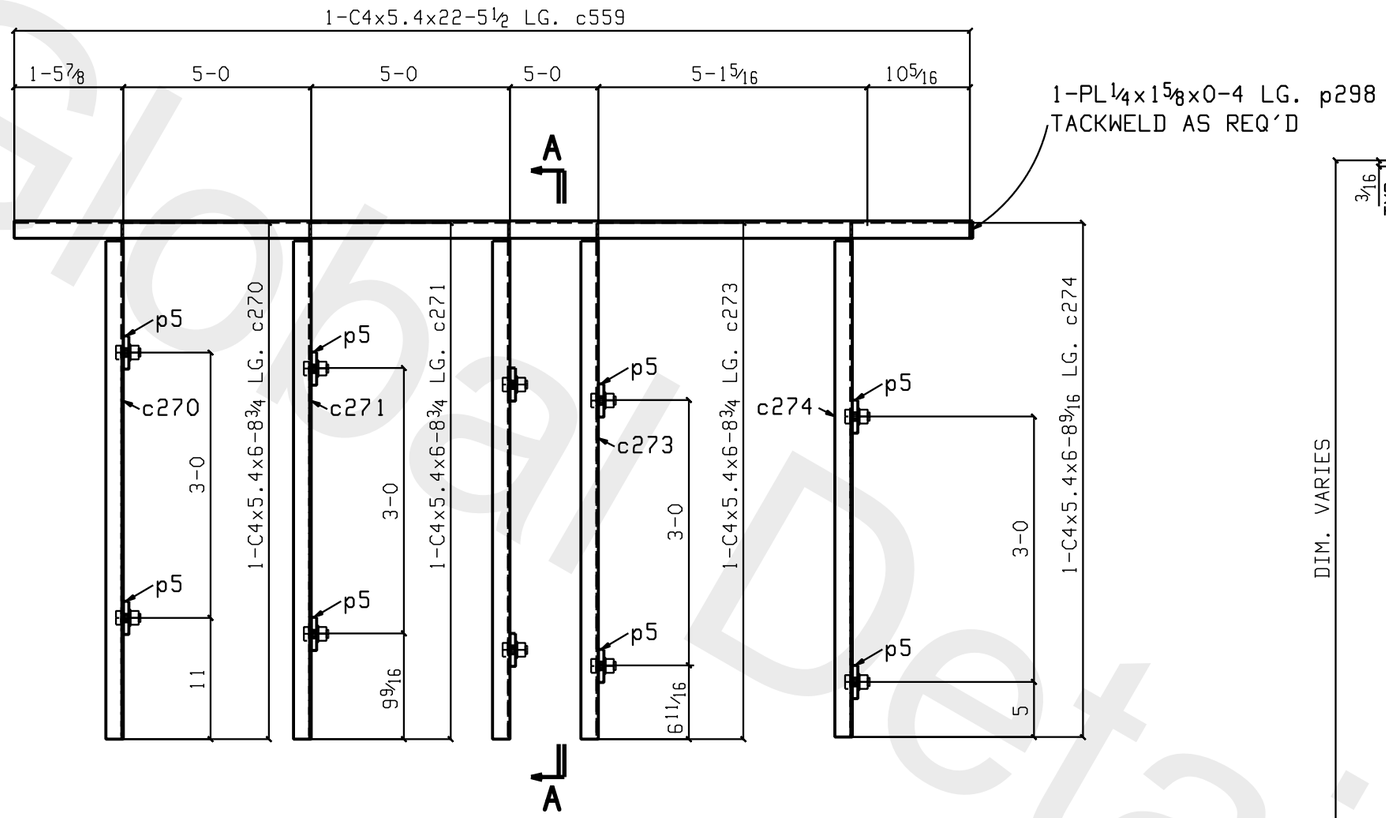


## ONE FRAME 1F1

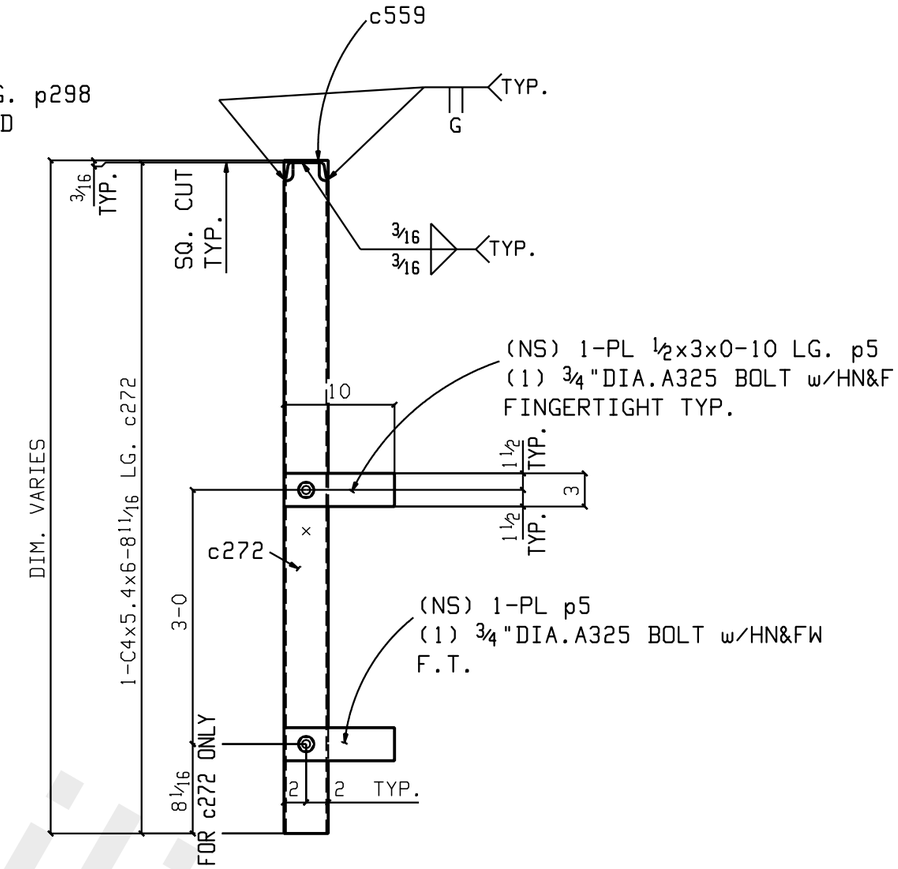


## Section A-A
1F1

## BILL OF MATERIAL

| LIFT NO. | LIFT QTY. | NO. OF PIECES | PIECE MARK | MATERIAL | LENGTH FT. | LENGTH IN. | REMARKS | WEIGHT TOTAL |
|---|---|---|---|---|---|---|---|---|
| | | ONE | 1F1 | FRAME | | | | 347 |
| | | 1 | c559 | C4x5.4 | 22 | 5½ | A572-50 | 121 |
| | | 1 | p298 | PL¼x1⁹⁄₁₆ | 0 | 4 | A572-50 | 0 |
| | | 1 | c274 | C4x5.4 | 6 | 8⁹⁄₁₆ | A572-50 | 36 |
| | | 10 | p5 | PL½x3 | 0 | 10 | A572-50 | 41 |
| | | 1 | c273 | C4x5.4 | 6 | 8¾ | A572-50 | 36 |
| | | 1 | c272 | C4x5.4 | 6 | 8¾ | A572-50 | 36 |
| | | 1 | c271 | C4x5.4 | 6 | 8¾ | A572-50 | 36 |
| | | 1 | c270 | C4x5.4 | 6 | 8¾ | A572-50 | 34~~7~~36 |
| | | 10 | | ¾ Dia A325N | 0 | 1¾ | 1HD WASH | 6 |

HOLES: ¹³⁄₁₆" DIA U.N.O.
SURFACE PREP: SSPC-SP 2
FINISH: **PPG COATING 94-232**
ELECTRODES: E70XX-(LOW HYDROGEN)

GENERAL NOTES:

ALL DIMENSIONS FROM END OF MAIN MATERIAL U/N.
ALL VERTICAL SPACING OF HOLES TO BE 3" U/N.
ALL COPES TO HAVE ¼" MINIMUM RADIUS.

CHARGES FOR CORRECTIVE WORK WILL NOT BE HONORED UNLESS PREVIOUS APPROVAL IS OBTAINED FROM JEFFORDS STEEL AND ENGINEERING COMPANY.

MEMBERS ARE TO BE ERECTED SO THAT MARKED END IS IN THE SAME LOCATION AS ON THE ERECTION DRAWING.

ON SHOP BOLTED CLIP ANGLES ON BEAMS: ON PIECE MARK END, INSERT SHOP BOLTS SO THE HEAD OF THE BOLT IS ON THE NEAR SIDE OF BEAM. ON THE NON-PIECE MARK END, INSERT BOLTS SO THE HEAD OF THE BOLT IS ON THE FAR SIDE OF BEAM.

REVISIONS

| rev# | date | description |
|---|---|---|
| | | |

| | |
|---|---|
| job no. | 4497 |
| date | Feb 22 201 |
| drawn by | TC |
| checked by | CHECKER |

PRINT RECORD

| | | |
|---|---|---|
| APP-1-6 | | |
| APP-2-9 | | |

DRAWINGS PREPARED BY,
GLOBAL DETAILING, INC.
JOB # 11-390

customer
ENCOMPASS DEVELOP
DESIGN CONSTRUCTION

Jeffords
STEEL AND ENGINEERING COMPANY
P.O. BOX 40-4398 ROUTE #22
PLATTSBURGH,N.Y 12901
518-561-4061

project
AKWESASNE MOHAWK
CASINO
873 STATE HIGHWAY 37
AKWESASNE, NY

1F1

Global Detailing Inc

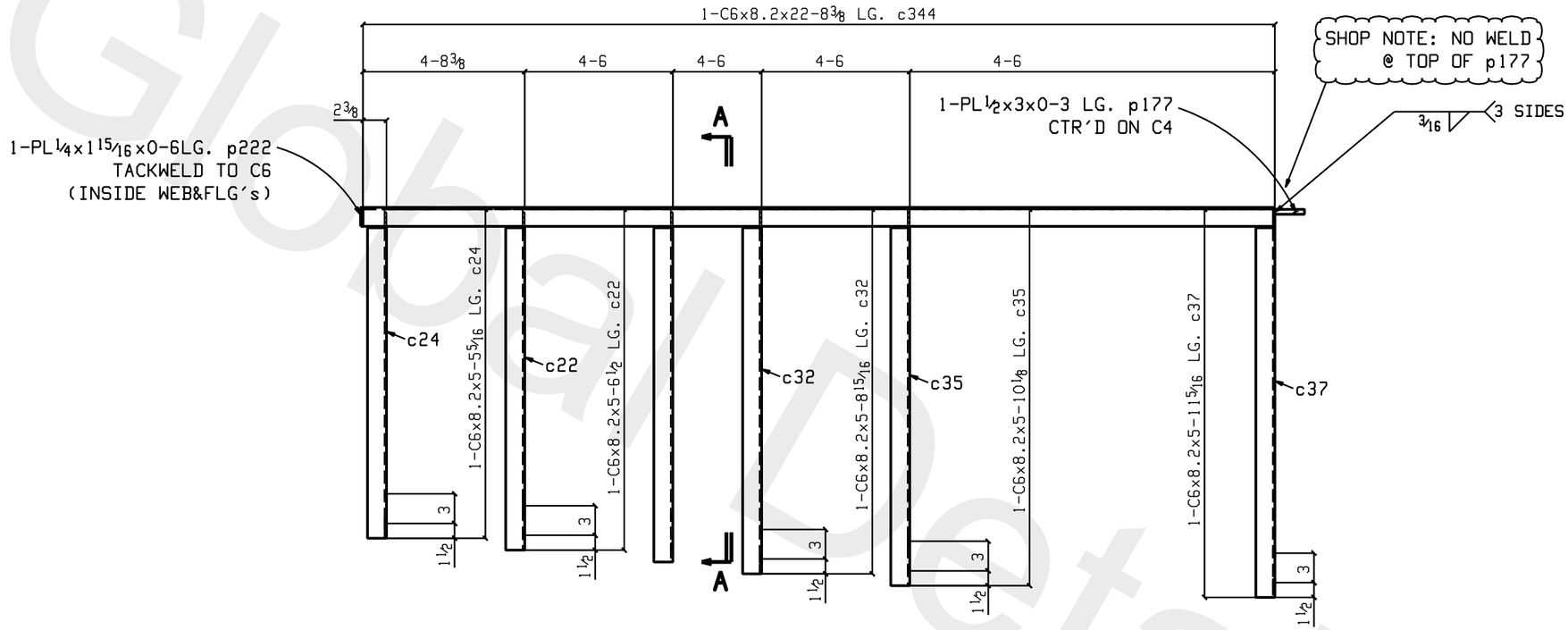


## ONE FRAME 1F10

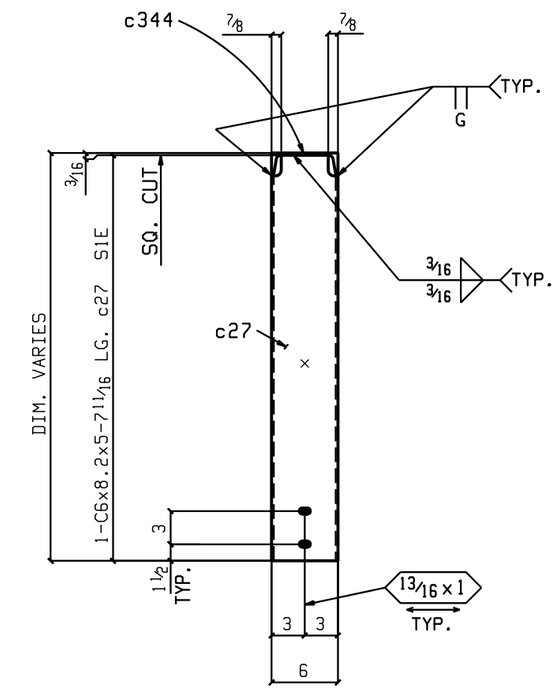


## Section A-A

1F10

FIELD BOLTS:
(10) 3/4"DIA. A325N x 1 1/2 1HD. WASH.

## BILL OF MATERIAL

| LIFT NO. | LIFT QTY. | NO. OF PIECES | PIECE MARK | MATERIAL | LENGTH FT. | LENGTH IN. | REMARKS | WEIGHT TOTAL |
|---|---|---|---|---|---|---|---|---|
| | | ONE | 1F10 | FRAME | | | | 463 |
| | | 1 | c344 | C6x8.2 | 22 | 8 3/8 | A572-50 | 186 |
| | | 1 | p222 | PL 1/4 x 1 15/16 | 0 | 6 | A572-50 | 1 |
| | | 1 | c24 | C6x8.2 | 5 | 5 5/16 | A572-50 | 44 |
| | | 1 | c22 | C6x8.2 | 5 | 6 1/2 | A572-50 | 45 |
| | | 1 | c27 | C6x8.2 | 5 | 7 11/16 | A572-50 | 45 |
| | | 1 | c32 | C6x8.2 | 5 | 8 15/16 | A572-50 | 46 |
| | | 1 | c35 | C6x8.2 | 5 | 10 1/8 | A572-50 | 47 |
| | | 1 | c37 | C6x8.2 | 5 | 11 5/16 | A572-50 | 46 3/8 |
| | | 1 | p177 | PL 1/2 x 3 | 0 | 3 | A572-50 | 1 |

HOLES: 13/16" DIA U.N.O.
SURFACE PREP: SSPC-SP 2
FINISH: **PPG COATING 94-232**
ELECTRODES: E70XX-(LOW HYDROGEN)

GENERAL NOTES:

ALL DIMENSIONS FROM END OF MAIN MATERIAL U/N.
ALL VERTICAL SPACING OF HOLES TO BE 3" U/N.
ALL COPES TO HAVE 1/2" MINIMUM RADIUS.

CHARGES FOR CORRECTIVE WORK WILL NOT BE HONORED UNLESS PREVIOUS APPROVAL IS OBTAINED FROM JEFFORDS STEEL AND ENGINEERING COMPANY.

MEMBERS ARE TO BE ERECTED SO THAT MARKED END IS IN THE SAME LOCATION AS ON THE ERECTION DRAWING.

ON SHOP BOLTED CLIP ANGLES ON BEAMS: ON PIECE MARK END, INSERT SHOP BOLTS SO THE HEAD OF THE BOLT IS ON THE NEAR SIDE OF BEAM. ON THE NON-PIECE MARK END, INSERT BOLTS SO THE HEAD OF THE BOLT IS ON THE FAR SIDE OF BEAM.

REVISIONS

| rev# | date | description |
|---|---|---|
| | | |

| | |
|---|---|
| job no. | 4497 |
| date | Feb 22 201 |
| drawn by | TC |
| checked by | GDI |

PRINT RECORD

| | | |
|---|---|---|
| APP-1-6 | | |
| FAB 2-14 | | |

DRAWINGS PREPARED BY,
GLOBAL DETAILING, INC.
JOB # 11-390

customer
ENCOMPASS DEVELOP
DESIGN CONSTRUCTION

Jeffords
STEEL AND ENGINEERING COMPANY
P.O. BOX 40-4398 ROUTE #22
PLATTSBURGH,N.Y 12901
518-561-4061

project
AKWESASNE MOHAWK
CASINO
873 STATE HIGHWAY 37
AKWESASNE, NY

1F10

Global Detailing Inc

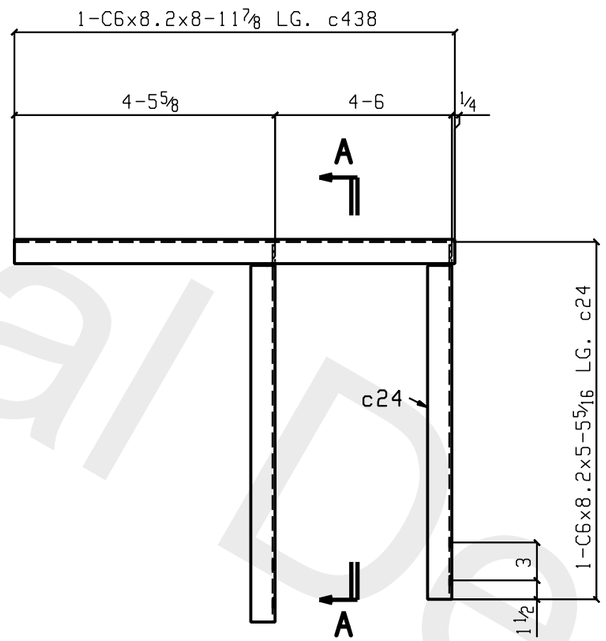


ONE FRAME 1F11

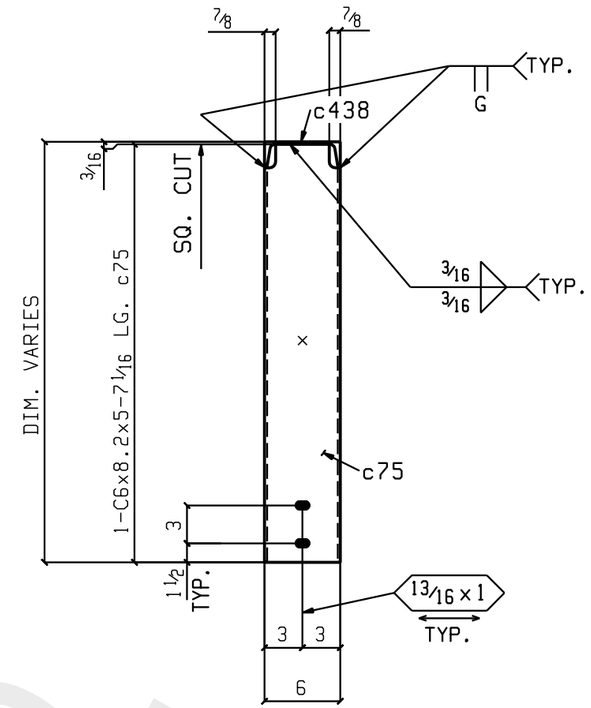


Section A-A

1F11

## BILL OF MATERIAL

| LIFT NO. | LIFT QTY. | NO. OF PIECES | PIECE MARK | MATERIAL | LENGTH FT. | LENGTH IN. | REMARKS | WEIGHT TOTAL |
|---|---|---|---|---|---|---|---|---|
| | | ONE | 1F11 | FRAME | | | | 163 |
| | | 1 | c438 | C6x8.2 | 8 | 11 7/8 | A572-50 | 74 |
| | | 1 | c24 | C6x8.2 | 5 | 5 5/16 | A572-50 | 44 |
| | | 1 | c75 | C6x8.2 | 5 | 7 1/16 | A572-50 | 46 |
| | | | | | | | | |
| | | | | FIELD BOLTS | | | | |
| | | 4 | | 3/4 Dia A325N | 0 | 1 1/2 | 1HD WASH | |
| | | | | | | | | |
| | | | | | | | | 163 |

HOLES: 13/16" DIA U.N.O.
SURFACE PREP: SSPC-SP 2
FINISH: **PPG COATING 94-232**
ELECTRODES: E70XX-(LOW HYDROGEN)

GENERAL NOTES:

ALL DIMENSIONS FROM END OF MAIN MATERIAL U/N.
ALL VERTICAL SPACING OF HOLES TO BE 3" U/N.
ALL COPES TO HAVE 1/2" MINIMUM RADIUS.

CHARGES FOR CORRECTIVE WORK WILL NOT BE HONORED UNLESS PREVIOUS APPROVAL IS OBTAINED FROM JEFFORDS STEEL AND ENGINEERING COMPANY.

MEMBERS ARE TO BE ERECTED SO THAT MARKED END IS IN THE SAME LOCATION AS ON THE ERECTION DRAWING.

ON SHOP BOLTED CLIP ANGLES ON BEAMS: ON PIECE MARK END, INSERT SHOP BOLTS SO THE HEAD OF THE BOLT IS ON THE NEAR SIDE OF BEAM. ON THE NON-PIECE MARK END, INSERT BOLTS SO THE HEAD OF THE BOLT IS ON THE FAR SIDE OF BEAM.

REVISIONS

| rev# | date | description |
|---|---|---|
| | | |

job no. 4497
date Feb 22 201
drawn by TC
checked by GDI

PRINT RECORD

| | | |
|---|---|---|
| APP-1-6 | | |
| FAB 2-14 | | |

DRAWINGS PREPARED BY,
GLOBAL DETAILING, INC.
JOB # 11-390

customer
ENCOMPASS DEVELOP
DESIGN CONSTRUCTION

Jeffords
STEEL AND ENGINEERING COMPANY
P.O. BOX 40-4398 ROUTE #22
PLATTSBURGH,N.Y 12901
518-561-4061

project
AKWESASNE MOHAWK
CASINO
873 STATE HIGHWAY 37
AKWESASNE, NY

1F11

Global Detailing Inc

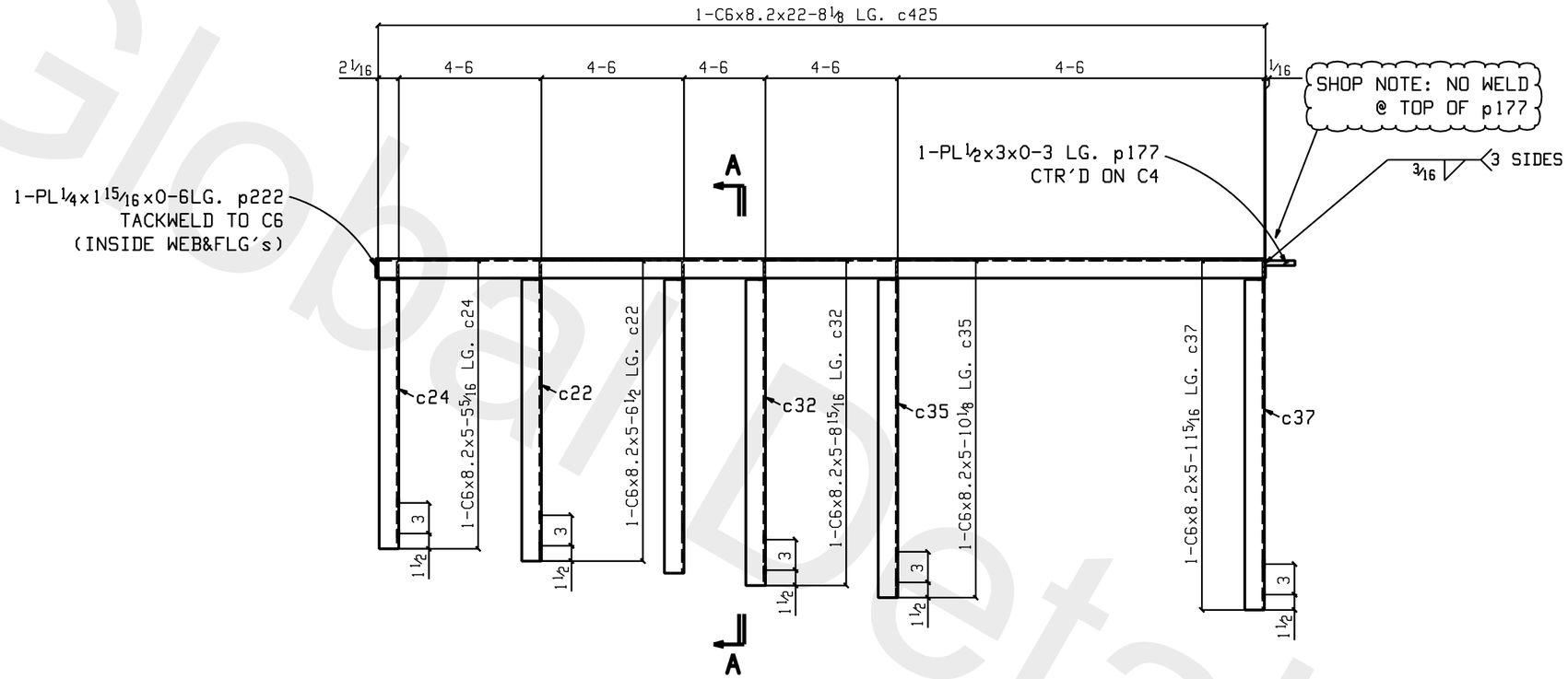


ONE FRAME 1F12

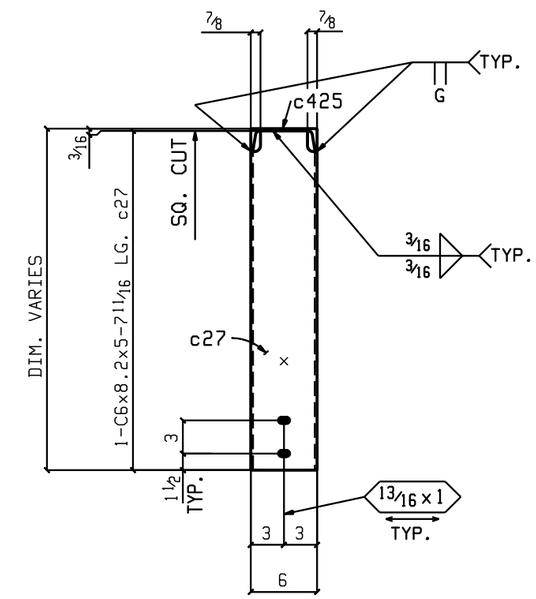


**Section A-A**

1F12

## BILL OF MATERIAL

| LIFT NO. | LIFT QTY. | NO. OF PIECES | PIECE MARK | MATERIAL | LENGTH FT. | LENGTH IN. | REMARKS | WEIGHT TOTAL |
|---|---|---|---|---|---|---|---|---|
| | | ONE | 1F12 | FRAME | | | | 463 |
| | | 1 | c425 | C6x8.2 | 22 | 8 1/8 | A572-50 | 186 |
| | | 1 | p222 | PL 1/4x1 15/16 | 0 | 6 | A572-50 | 1 |
| | | 1 | c24 | C6x8.2 | 5 | 5 5/16 | A572-50 | 44 |
| | | 1 | c22 | C6x8.2 | 5 | 6 1/2 | A572-50 | 45 |
| | | 1 | c27 | C6x8.2 | 5 | 7 11/16 | A572-50 | 45 |
| | | 1 | c32 | C6x8.2 | 5 | 8 15/16 | A572-50 | 46 |
| | | 1 | c35 | C6x8.2 | 5 | 10 1/8 | A572-50 | 47 |
| | | 1 | c37 | C6x8.2 | 5 | 11 5/16 | A572-50 | 46 18 |
| | | 1 | p177 | PL 1/2x3 | 0 | 3 | A572-50 | 1 |

HOLES: 13/16" DIA U.N.O.
SURFACE PREP: SSPC-SP 2
FINISH: **PPG COATING 94-232**
ELECTRODES: E70XX-(LOW HYDROGEN)

GENERAL NOTES:

ALL DIMENSIONS FROM END OF MAIN MATERIAL U/N.
ALL VERTICAL SPACING OF HOLES TO BE 3" U/N.
ALL COPES TO HAVE 1/2" MINIMUM RADIUS.

CHARGES FOR CORRECTIVE WORK WILL NOT BE HONORED UNLESS PREVIOUS APPROVAL IS OBTAINED FROM JEFFORDS STEEL AND ENGINEERING COMPANY.

MEMBERS ARE TO BE ERECTED SO THAT MARKED END IS IN THE SAME LOCATION AS ON THE ERECTION DRAWING.

ON SHOP BOLTED CLIP ANGLES ON BEAMS: ON PIECE MARK END, INSERT SHOP BOLTS SO THE HEAD OF THE BOLT IS ON THE NEAR SIDE OF BEAM. ON THE NON-PIECE MARK END, INSERT BOLTS SO THE HEAD OF THE BOLT IS ON THE FAR SIDE OF BEAM.

REVISIONS

| rev# | date | description |
|---|---|---|
| | | |

| | |
|---|---|
| job no. | 4497 |
| date | Feb 22 201 |
| drawn by | TC |
| checked by | GDI |

PRINT RECORD

| | | |
|---|---|---|
| APP-1-6 | | |
| FAB 2-14 | | |

DRAWINGS PREPARED BY,
GLOBAL DETAILING, INC.
JOB # 11-390

customer
ENCOMPASS DEVELOP
DESIGN CONSTRUCTION

Jeffords
STEEL AND ENGINEERING COMPANY
P.O. BOX 40-4398 ROUTE #22
PLATTSBURGH,N.Y 12901
518-561-4061

project
AKWESASNE MOHAWK
CASINO
873 STATE HIGHWAY 37
AKWESASNE, NY

1F12

Global Detailing Inc

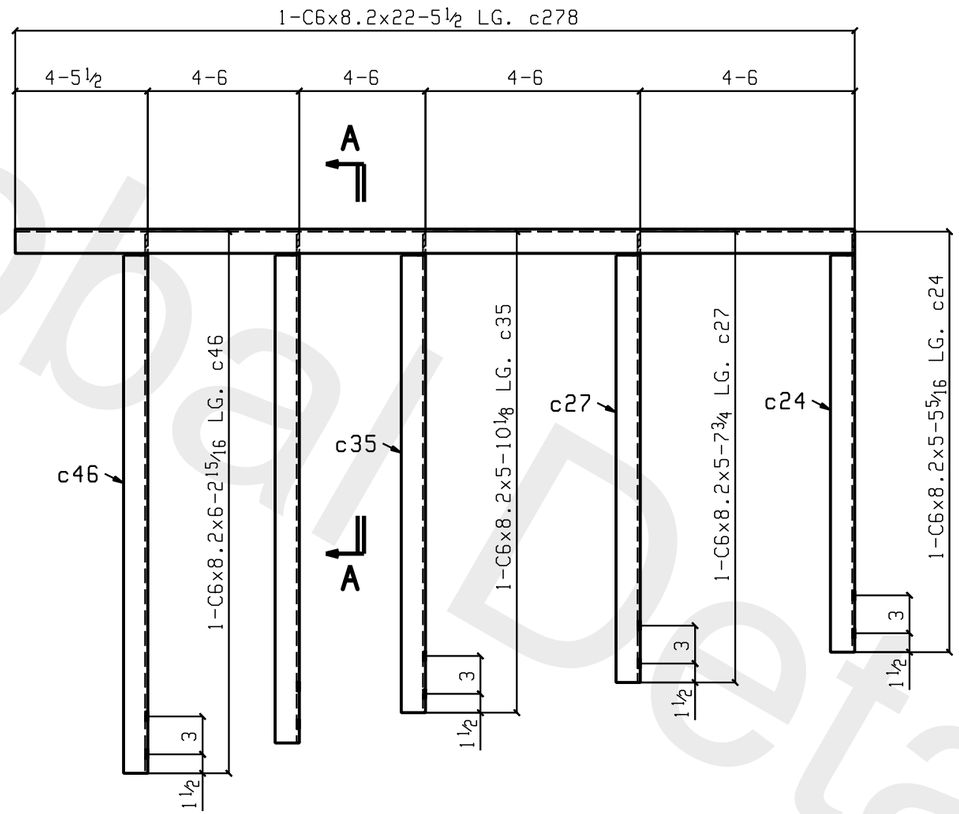


## ONE FRAME 1F13

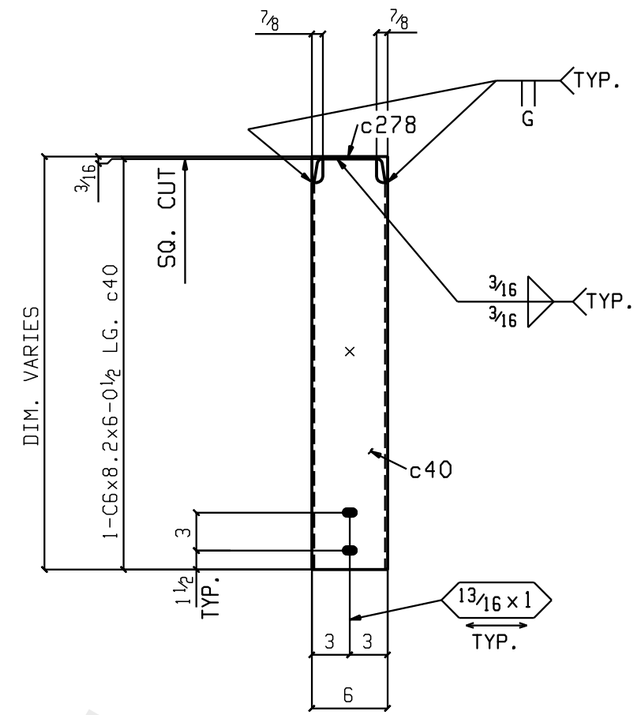


## Section A-A

1F13

## BILL OF MATERIAL

| LIFT NO. | LIFT QTY. | NO. OF PIECES | PIECE MARK | MATERIAL | LENGTH FT. | LENGTH IN. | REMARKS | WEIGHT TOTAL |
|---|---|---|---|---|---|---|---|---|
| | | ONE | 1F13 | FRAME | | | | 420 |
| | | 1 | c278 | C6x8.2 | 22 | 5½ | A572-50 | 184 |
| | | 1 | c24 | C6x8.2 | 5 | 5⁵⁄₁₆ | A572-50 | 44 |
| | | 1 | c46 | C6x8.2 | 6 | 2¹⁵⁄₁₆ | A572-50 | 50 |
| | | 1 | c40 | C6x8.2 | 6 | 0½ | A572-50 | 49 |
| | | 1 | c35 | C6x8.2 | 5 | 10⅛ | A572-50 | 47 |
| | | 1 | c27 | C6x8.2 | 5 | 7¾ | A572-50 | 46 |
| | | | | | | | | |
| | | | | FIELD BOLTS | | | | 420 |
| | | 10 | | ¾ Dia A325N | 0 | 1½ | 1HD WASH | |

HOLES: 13⁄16" DIA U.N.O.
SURFACE PREP: SSPC-SP 2
FINISH: **PPG COATING 94-232**
ELECTRODES: E70XX-(LOW HYDROGEN)

GENERAL NOTES:

ALL DIMENSIONS FROM END OF MAIN MATERIAL U/N.
ALL VERTICAL SPACING OF HOLES TO BE 3" U/N.
ALL COPES TO HAVE ¼" MINIMUM RADIUS.

CHARGES FOR CORRECTIVE WORK WILL NOT BE HONORED UNLESS PREVIOUS APPROVAL IS OBTAINED FROM JEFFORDS STEEL AND ENGINEERING COMPANY.

MEMBERS ARE TO BE ERECTED SO THAT MARKED END IS IN THE SAME LOCATION AS ON THE ERECTION DRAWING.

ON SHOP BOLTED CLIP ANGLES ON BEAMS: ON PIECE MARK END, INSERT SHOP BOLTS SO THE HEAD OF THE BOLT IS ON THE NEAR SIDE OF BEAM. ON THE NON-PIECE MARK END, INSERT BOLTS SO THE HEAD OF THE BOLT IS ON THE FAR SIDE OF BEAM.

REVISIONS

| rev# | date | description |
|---|---|---|
| | | |

job no. 4497
date Feb 22 201
drawn by TC
checked by GDI

PRINT RECORD

| | | |
|---|---|---|
| APP-1-6 | | |
| FAB 2-14 | | |

DRAWINGS PREPARED BY,
GLOBAL DETAILING, INC.
JOB # 11-390

customer
ENCOMPASS DEVELOP
DESIGN CONSTRUCTION

Jeffords
STEEL AND ENGINEERING COMPANY
P.O. BOX 40-4398 ROUTE #22
PLATTSBURGH,N.Y 12901
518-561-4061

project
AKWESASNE MOHAWK
CASINO
873 STATE HIGHWAY 37
AKWESASNE, NY

1F13

Global Detailing Inc

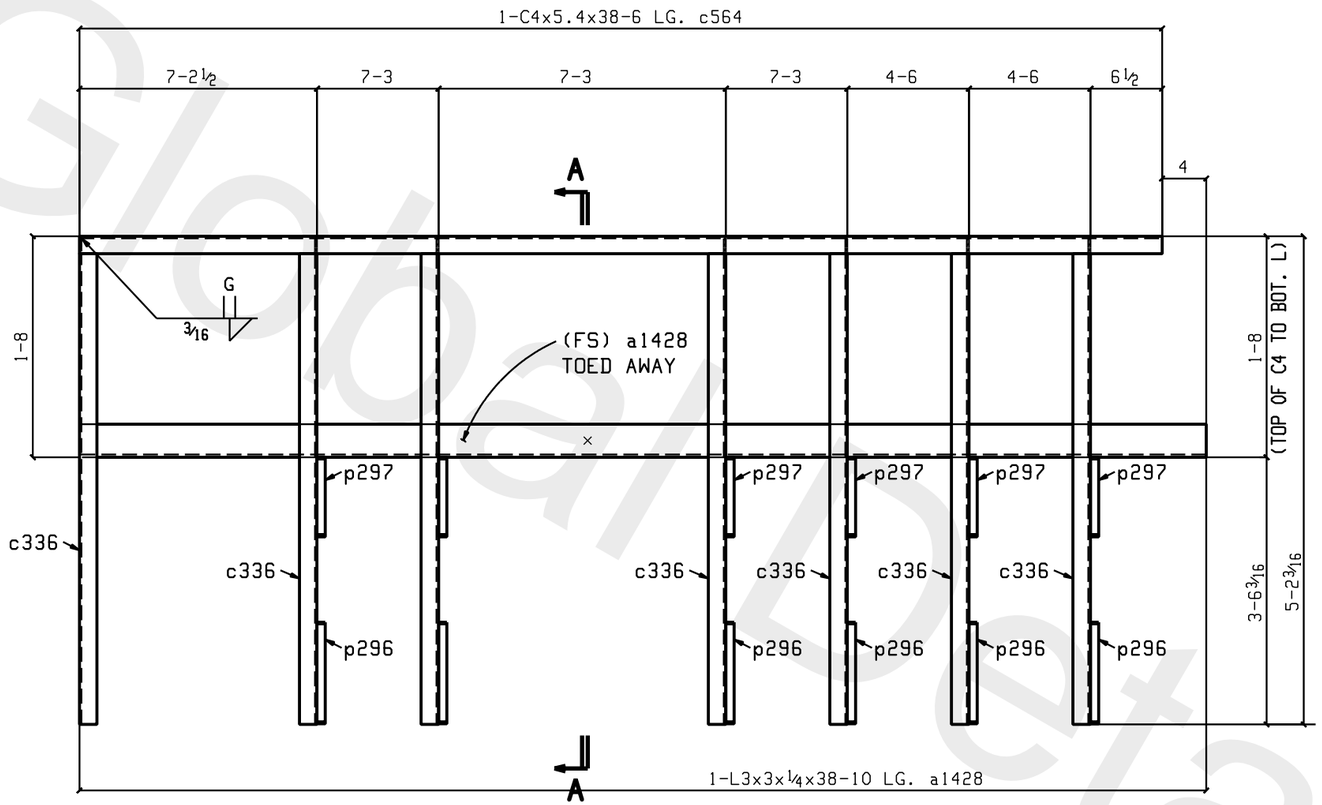


## ONE FRAME 1F14

(REF. E3)

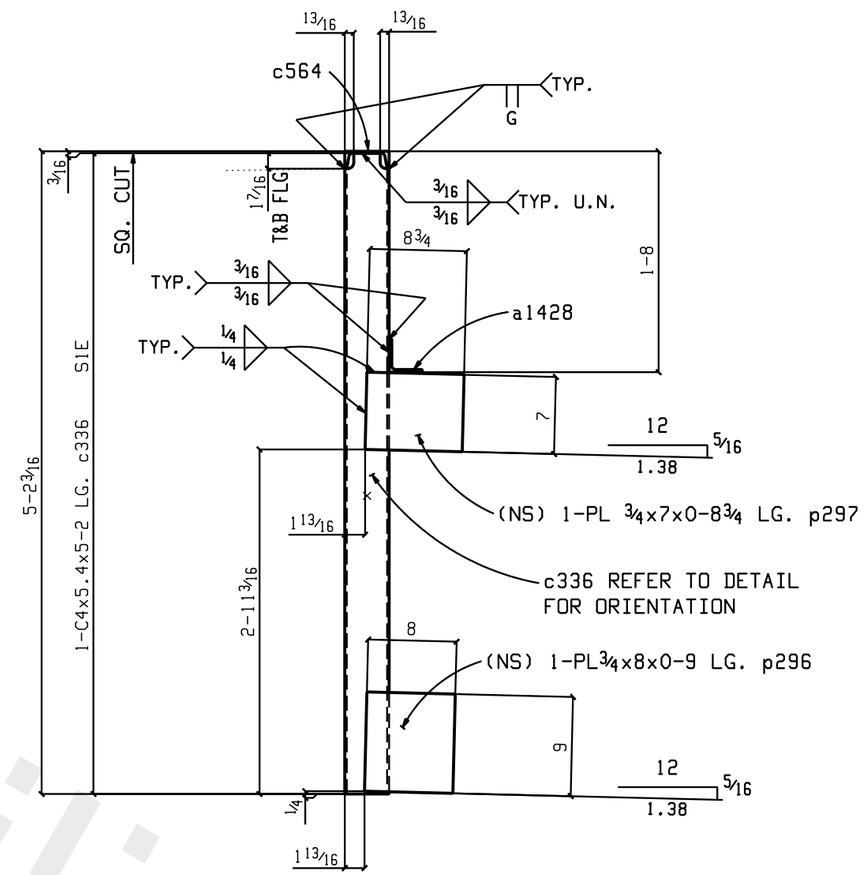


## Section A-A

1F14

## BILL OF MATERIAL

| LIFT NO. | LIFT QTY. | NO. OF PIECES | PIECE MARK | MATERIAL | LENGTH FT. | LENGTH IN. | REMARKS | WEIGHT TOTAL |
|---|---|---|---|---|---|---|---|---|
| | | ONE | 1F14 | FRAME | | | | 761 |
| | | 1 | c564 | C4x5.4 | 38 | 6 | A572-50 | 208 |
| | | 7 | c336 | C4x5.4 | 5 | 2 | A572-50 | 192 |
| | | 6 | p296 | PL¾x8 3/16 | 0 | 9 3/16 | A572-50 | 92 |
| | | 6 | p297 | PL¾x7 3/16 | 0 | 8 15/16 | A572-50 | 78 |
| | | 1 | a1428 | L3x3x¼ | 38 | 10 | A572-50 | 190 |
| | | | | | | | | |
| | | | | | | | | |
| | | | | | | | | 761 |

HOLES: 13/16" DIA U.N.O.
SURFACE PREP: SSPC-SP 2
FINISH: **PPG COATING 94-232**
ELECTRODES: E70XX-(LOW HYDROGEN)

GENERAL NOTES:

ALL DIMENSIONS FROM END OF MAIN MATERIAL U/N.
ALL VERTICAL SPACING OF HOLES TO BE 3" U/N.
ALL COPES TO HAVE ½" MINIMUM RADIUS.

CHARGES FOR CORRECTIVE WORK WILL NOT BE HONORED UNLESS PREVIOUS APPROVAL IS OBTAINED FROM JEFFORDS STEEL AND ENGINEERING COMPANY.

MEMBERS ARE TO BE ERECTED SO THAT MARKED END IS IN THE SAME LOCATION AS ON THE ERECTION DRAWING.

ON SHOP BOLTED CLIP ANGLES ON BEAMS: ON PIECE MARK END, INSERT SHOP BOLTS SO THE HEAD OF THE BOLT IS ON THE NEAR SIDE OF BEAM. ON THE NON-PIECE MARK END, INSERT BOLTS SO THE HEAD OF THE BOLT IS ON THE FAR SIDE OF BEAM.

REVISIONS

| rev# | date | description |
|---|---|---|
| | | |

| | |
|---|---|
| job no. | 4497 |
| date | Feb 22 201 |
| drawn by | TC |
| checked by | GDI |

PRINT RECORD

| | | |
|---|---|---|
| APP-1-6 | | |
| APP-2-9 | | |

DRAWINGS PREPARED BY,
GLOBAL DETAILING, INC.
JOB # 11-390

customer
ENCOMPASS DEVELOP
DESIGN CONSTRUCTION

Jeffords
STEEL AND ENGINEERING COMPANY
P.O. BOX 40-4398 ROUTE #22
PLATTSBURGH,N.Y 12901
518-561-4061

project
AKWESASNE MOHAWK
CASINO
873 STATE HIGHWAY 37
AKWESASNE, NY

1F14

Global Detailing Inc

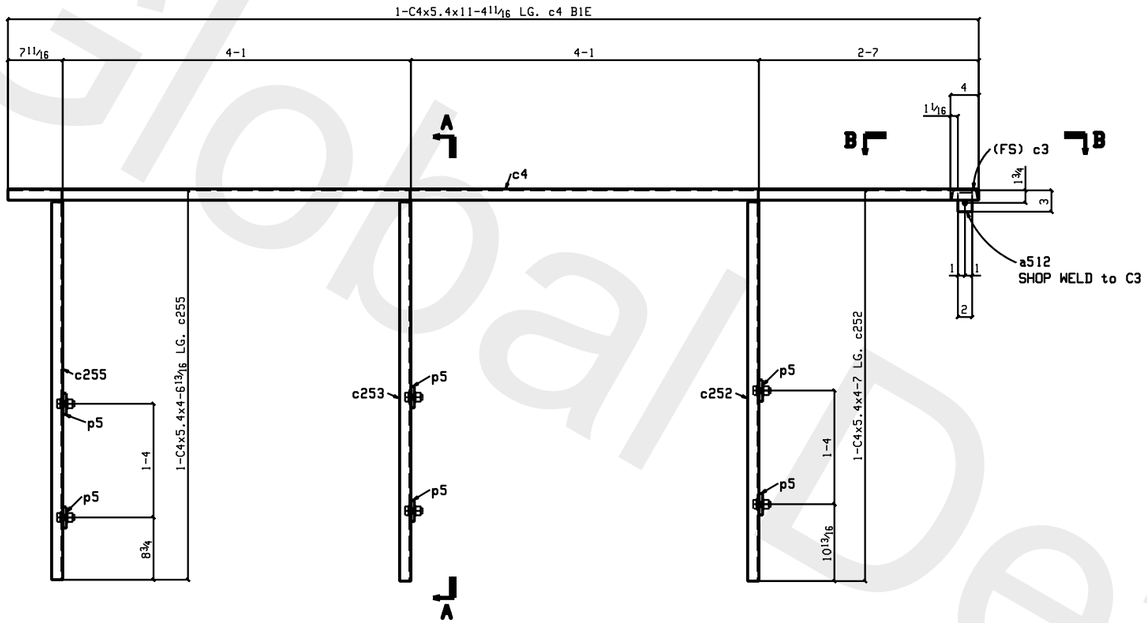


ONE FRAME 1F16

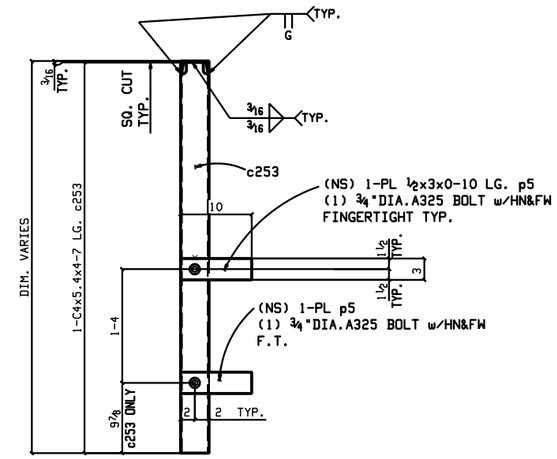


Section A-A
1F16

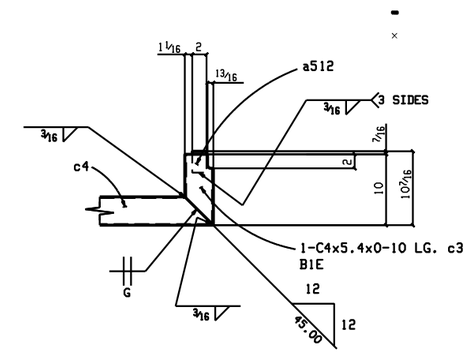


Section B-B
1F16

## BILL OF MATERIAL

| LIFT NO. | LIFT QTY. | NO. OF PIECES | PIECE MARK | MATERIAL | LENGTH FT. | LENGTH IN. | REMARKS | WEIGHT TOTAL |
|---|---|---|---|---|---|---|---|---|
| | | ONE | 1F16 | FRAME | | | | 166 |
| | | 1 | c4 | C4x5.4 | 11 | 4 11/16 | A572-50 | 62 |
| | | 1 | a512 | L3x3x5/16 | 0 | 2 | A572-50 | 1 |
| | | 1 | c252 | C4x5.4 | 4 | 7 | FIELD/APPL VERIFY A572-5024 | |
| | | 1 | c253 | C4x5.4 | 4 | 7 | FIELD/APPL VERIFY A572-5024 | |
| | | 1 | c255 | C4x5.4 | 4 | 6 13/16 | FIELD/APPL VERIFY A572-5024 | |
| | | 1 | c3 | C4x5.4 | 0 | 10 | A572-50 | 3 |
| | | 6 | p5 | PL 1/2x3 | 0 | 10 | A572-50 | 24 |
| | | 6 | | 3/4 Dia A325N | 0 | 2 | 2HD WASH | 4 |
| | | | | | | | | |
| | | | | | | | | 166 |

HOLES: 13/16" DIA U.N.O.
SURFACE PREP: SSPC-SP 2
FINISH: **PPG COATING 94-232**
ELECTRODES: E70XX-(LOW HYDROGEN)

GENERAL NOTES:

ALL DIMENSIONS FROM END OF MAIN MATERIAL U/N.
ALL VERTICAL SPACING OF HOLES TO BE 3" U/N.
ALL COPES TO HAVE 1/2" MINIMUM RADIUS.

CHARGES FOR CORRECTIVE WORK WILL NOT BE HONORED UNLESS PREVIOUS APPROVAL IS OBTAINED FROM JEFFORDS STEEL AND ENGINEERING COMPANY.

MEMBERS ARE TO BE ERECTED SO THAT MARKED END IS IN THE SAME LOCATION AS ON THE ERECTION DRAWING.

ON SHOP BOLTED CLIP ANGLES ON BEAMS: ON PIECE MARK END, INSERT SHOP BOLTS SO THE HEAD OF THE BOLT IS ON THE NEAR SIDE OF BEAM. ON THE NON-PIECE MARK END, INSERT BOLTS SO THE HEAD OF THE BOLT IS ON THE FAR SIDE OF BEAM.

REVISIONS

| rev# | date | description |
|---|---|---|
| | | |

| | |
|---|---|
| job no. | 4497 |
| date | Feb 22 201 |
| drawn by | TC |
| checked by | CHECKER |

PRINT RECORD
APP-1-6
APP-2-9

DRAWINGS PREPARED BY,
GLOBAL DETAILING, INC.
JOB # 11-390

customer
ENCOMPASS DEVELOP
DESIGN CONSTRUCTION

Jeffords
STEEL AND ENGINEERING COMPANY
P.O. BOX 40-4398 ROUTE #22
PLATTSBURGH,N.Y 12901
518-561-4061

project
AKWESASNE MOHAWK
CASINO
873 STATE HIGHWAY 37
AKWESASNE, NY

1F16

Global Detailing Inc

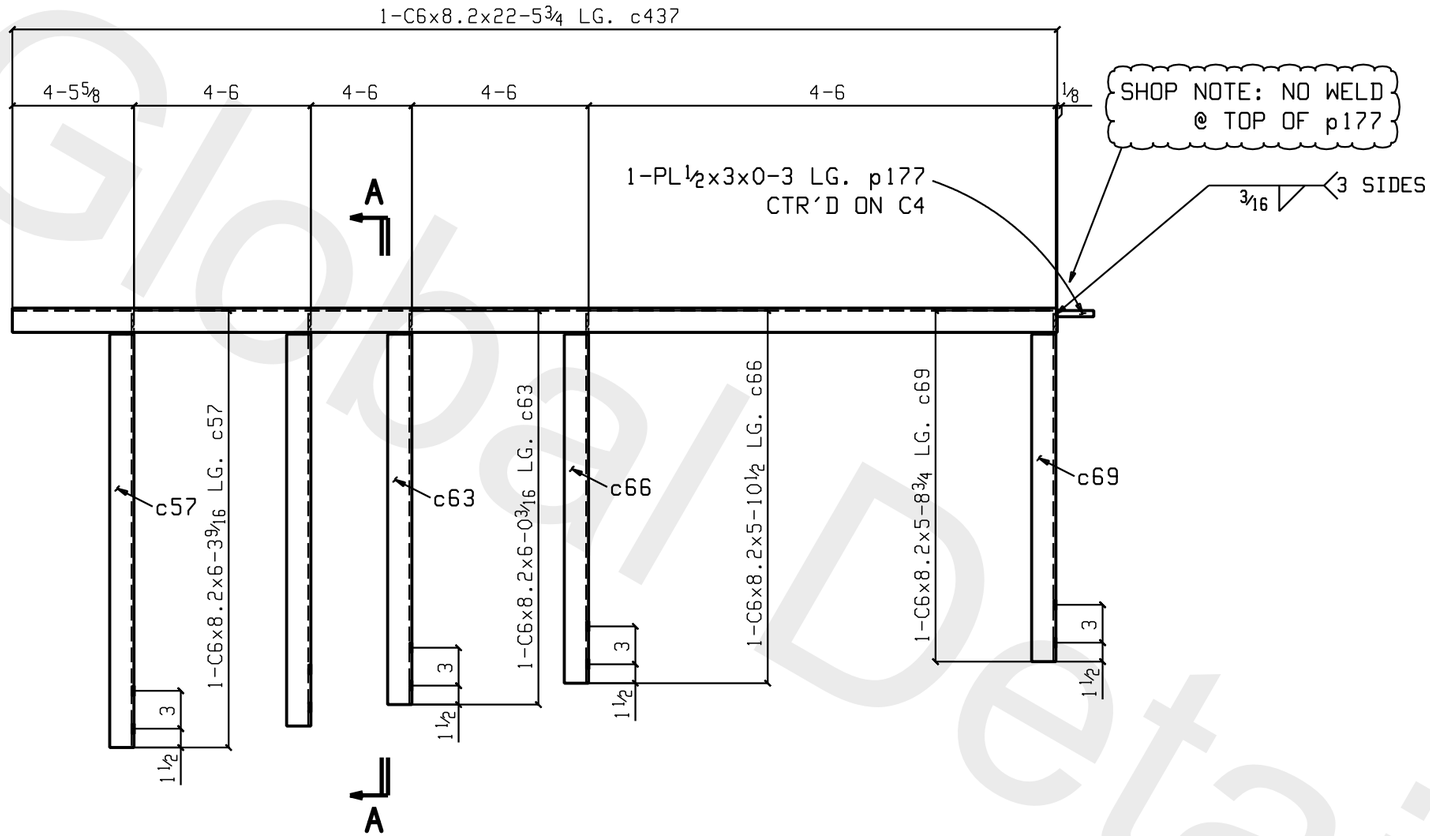


## ONE FRAME 1F17

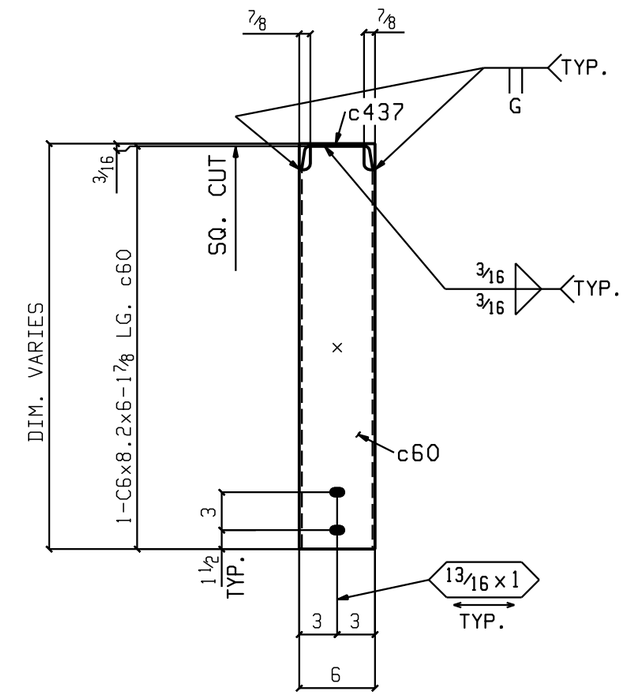


## Section A-A

1F17

## BILL OF MATERIAL

| LIFT NO. | LIFT QTY. | NO. OF PIECES | PIECE MARK | MATERIAL | LENGTH FT. | LENGTH IN. | REMARKS | WEIGHT TOTAL |
|---|---|---|---|---|---|---|---|---|
| | | ONE | 1F17 | FRAME | | | | 430 |
| | | 1 | c437 | C6x8.2 | 22 | 5¾ | A572-50 | 184 |
| | | 1 | c69 | C6x8.2 | 5 | 8¾ | A572-50 | 47 |
| | | 1 | p177 | PL½x3 | 0 | 3 | A572-50 | 1 |
| | | 1 | c57 | C6x8.2 | 6 | 3 9/16 | A572-50 | 52 |
| | | 1 | c60 | C6x8.2 | 6 | 1⅞ | A572-50 | 50 |
| | | 1 | c63 | C6x8.2 | 6 | 0 3/16 | A572-50 | 48 |
| | | 1 | c66 | C6x8.2 | 5 | 10½ | A572-50 | 47 |
| | | | | | | | | 430 |
| | | | | FIELD BOLTS | | | | |
| | | 10 | | ¾ Dia A325N | 0 | 1½ | 1HD WASH | |

FIELD BOLTS:
(10) ¾"DIA. A325N x 1½ 1HD. WASH.

HOLES: 13/16" DIA U.N.O.
SURFACE PREP: SSPC-SP 2
FINISH: **PPG COATING 94-232**
ELECTRODES: E70XX-(LOW HYDROGEN)

GENERAL NOTES:

ALL DIMENSIONS FROM END OF MAIN MATERIAL U/N.
ALL VERTICAL SPACING OF HOLES TO BE 3" U/N.
ALL COPES TO HAVE ¼" MINIMUM RADIUS.

CHARGES FOR CORRECTIVE WORK WILL NOT BE HONORED UNLESS PREVIOUS APPROVAL IS OBTAINED FROM JEFFORDS STEEL AND ENGINEERING COMPANY.

MEMBERS ARE TO BE ERECTED SO THAT MARKED END IS IN THE SAME LOCATION AS ON THE ERECTION DRAWING.

ON SHOP BOLTED CLIP ANGLES ON BEAMS: ON PIECE MARK END, INSERT SHOP BOLTS SO THE HEAD OF THE BOLT IS ON THE NEAR SIDE OF BEAM. ON THE NON-PIECE MARK END, INSERT BOLTS SO THE HEAD OF THE BOLT IS ON THE FAR SIDE OF BEAM.

REVISIONS

| rev# | date | description |
|---|---|---|
| | | |

| | |
|---|---|
| job no. | 4497 |
| date | Feb 22 201 |
| drawn by | TC |
| checked by | GDI |

PRINT RECORD
APP-1-6
FAB 2-14

DRAWINGS PREPARED BY,
GLOBAL DETAILING, INC.
JOB # 11-390

customer
ENCOMPASS DEVELOP
DESIGN CONSTRUCTION

Jeffords
STEEL AND ENGINEERING COMPANY
P.O. BOX 40-4398 ROUTE #22
PLATTSBURGH,N.Y 12901
518-561-4061

project
AKWESASNE MOHAWK
CASINO
873 STATE HIGHWAY 37
AKWESASNE, NY

1F17

Global Detailing Inc

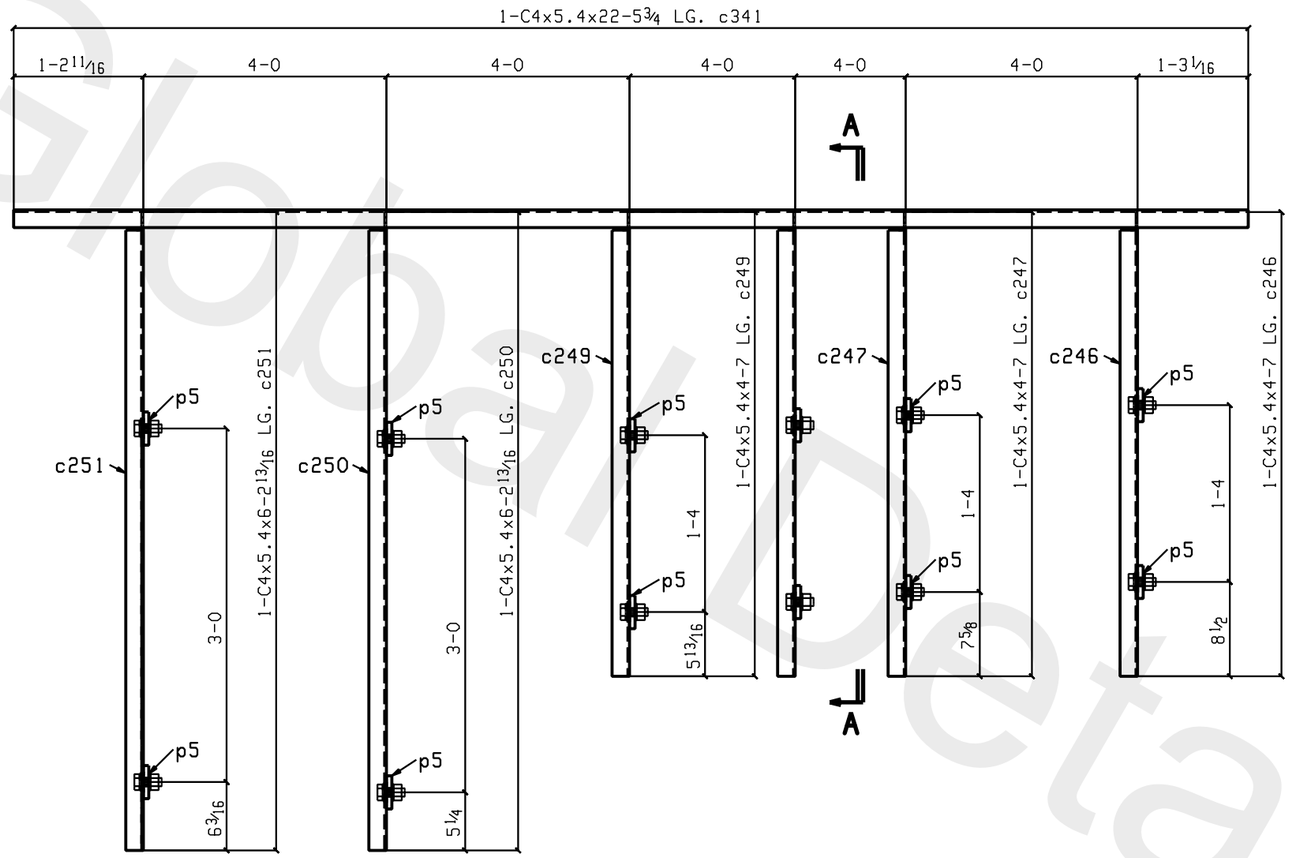


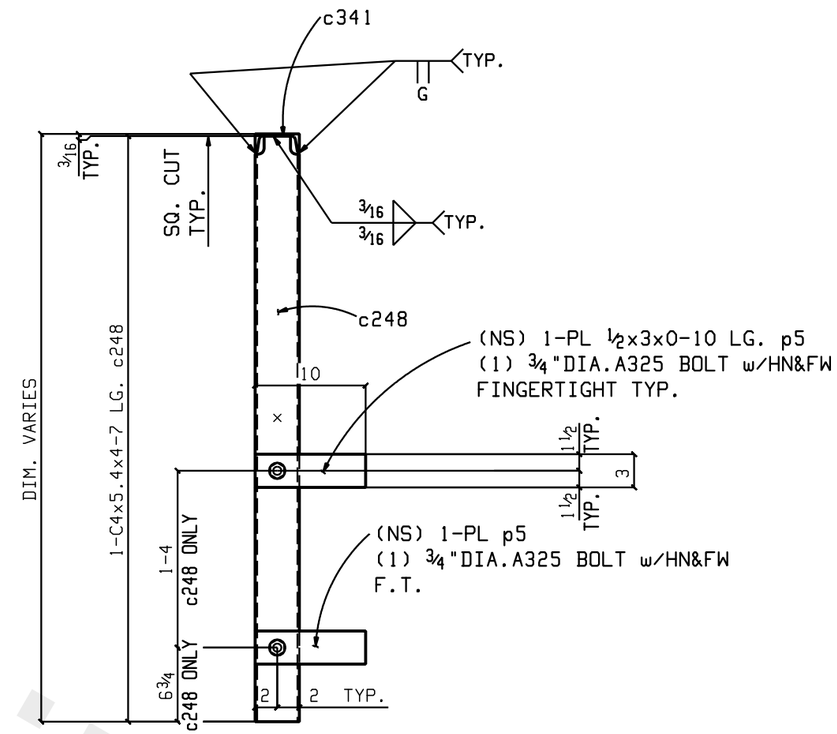


**Section A-A**
1F3

## ONE GROUP MEMBER 1F3

## BILL OF MATERIAL

| LIFT NO. | LIFT QTY. | NO. OF PIECES | PIECE MARK | MATERIAL | LENGTH FT. | LENGTH IN. | REMARKS | WEIGHT TOTAL |
|---|---|---|---|---|---|---|---|---|
| | | ONE | 1F3 | GROUP MEMBER | | | | 340 |
| | | 1 | c341 | C4x5.4 | 22 | 5¾ | A572-50 | 121 |
| | | 1 | c246 | C4x5.4 | 4 | 7 | FIELD/APPL VERIFY | A572-5024 |
| | | 12 | p5 | PL½x3 | 0 | 10 | A572-50 | 49 |
| | | 1 | c247 | C4x5.4 | 4 | 7 | FIELD/APPL VERIFY | A572-5024 |
| | | 1 | c248 | C4x5.4 | 4 | 7 | FIELD/APPL VERIFY | A572-5024 |
| | | 1 | c249 | C4x5.4 | 4 | 7 | FIELD/APPL VERIFY | A572-5024 |
| | | 1 | c250 | C4x5.4 | 6 | 2¾ | FIELD/APPL VERIFY | A572-5033 |
| | | 1 | c251 | C4x5.4 | 6 | 2¾ | FIELD/APPL VERIFY | A572-5033 |
| | | 11 | | ¾ Dia A325N | 0 | 2 | 2HD WASH | 8 |

HOLES: 13/16" DIA U.N.O.
SURFACE PREP: SSPC-SP 2
FINISH: **PPG COATING 94-232**
ELECTRODES: E70XX-(LOW HYDROGEN)

GENERAL NOTES:

ALL DIMENSIONS FROM END OF MAIN MATERIAL U/N.
ALL VERTICAL SPACING OF HOLES TO BE 3" U/N.
ALL COPES TO HAVE ¼" MINIMUM RADIUS.

CHARGES FOR CORRECTIVE WORK WILL NOT BE HONORED UNLESS PREVIOUS APPROVAL IS OBTAINED FROM JEFFORDS STEEL AND ENGINEERING COMPANY.

MEMBERS ARE TO BE ERECTED SO THAT MARKED END IS IN THE SAME LOCATION AS ON THE ERECTION DRAWING.

ON SHOP BOLTED CLIP ANGLES ON BEAMS: ON PIECE MARK END, INSERT SHOP BOLTS SO THE HEAD OF THE BOLT IS ON THE NEAR SIDE OF BEAM. ON THE NON-PIECE MARK END, INSERT BOLTS SO THE HEAD OF THE BOLT IS ON THE FAR SIDE OF BEAM.

REVISIONS

| rev# | date | description |
|---|---|---|
| | | |

| | |
|---|---|
| job no. | 4497 |
| date | Feb 22 201 |
| drawn by | TC |
| checked by | CHECKER |

PRINT RECORD
APP-1-6
APP-2-9

DRAWINGS PREPARED BY,
GLOBAL DETAILING, INC.
JOB # 11-390

customer
ENCOMPASS DEVELOP
DESIGN CONSTRUCTION

Jeffords
STEEL AND ENGINEERING COMPANY
P.O. BOX 40-4398 ROUTE #22
PLATTSBURGH,N.Y 12901
518-561-4061

project
AKWESASNE MOHAWK
CASINO
873 STATE HIGHWAY 37
AKWESASNE, NY

1F3

Global Detailing Inc

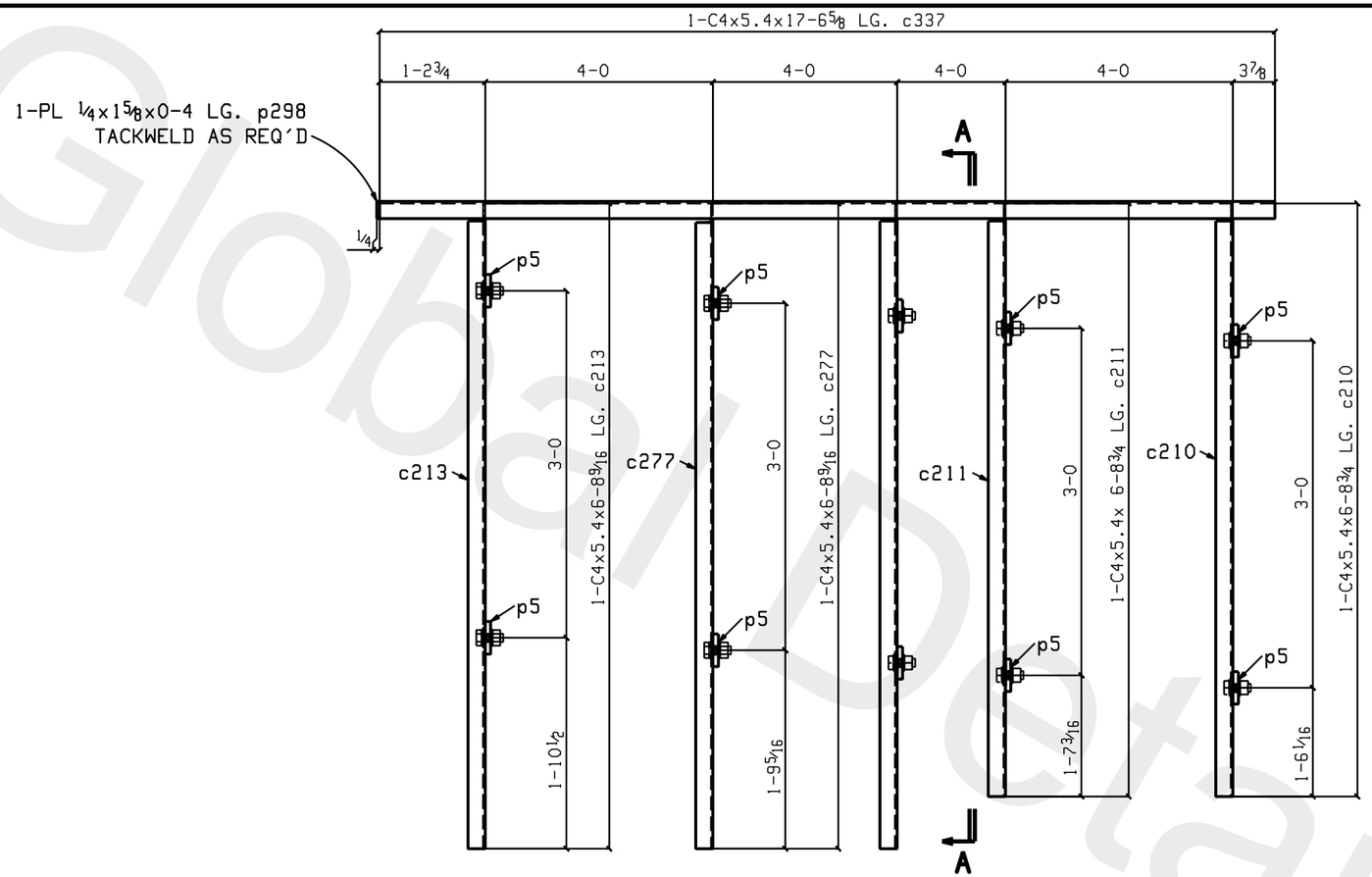


## ONE FRAME 1F4

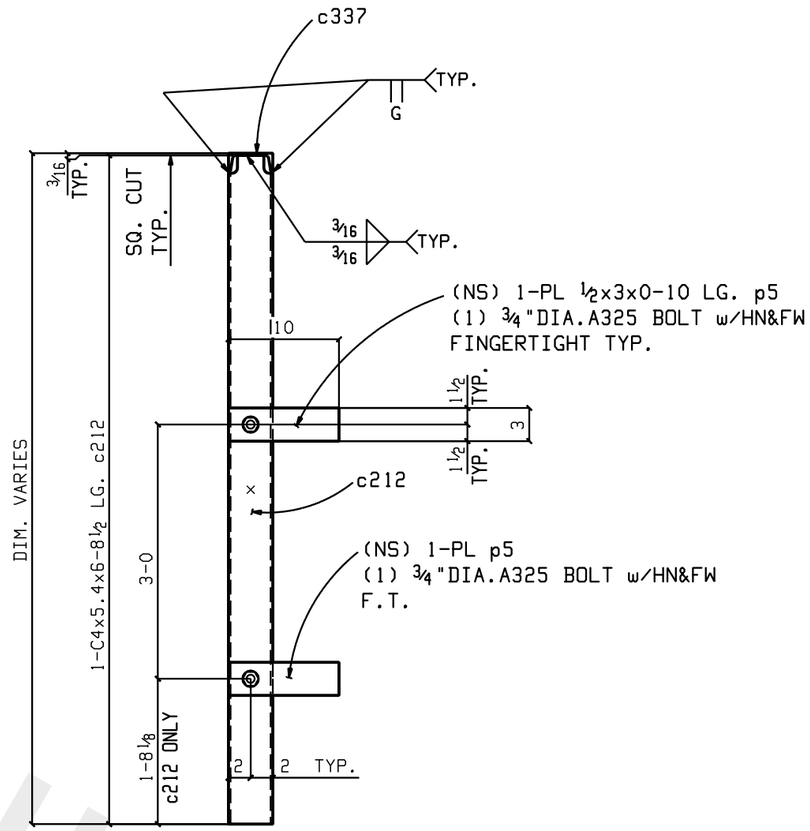


## Section A-A

1F4

## BILL OF MATERIAL

(REF. E4)

| LIFT NO. | LIFT QTY. | NO. OF PIECES | PIECE MARK | MATERIAL | LENGTH FT. | LENGTH IN. | REMARKS | WEIGHT TOTAL |
|---|---|---|---|---|---|---|---|---|
| | | ONE | 1F4 | FRAME | | | | 319 |
| | | 1 | c337 | C4x5.4 | 17 | 6 5/8 | A572-50 | 95 |
| | | 1 | c210 | C4x5.4 | 6 | 8 3/4 | FIELD/APPL VERIFY A572-5036 | |
| | | 1 | c211 | C4x5.4 | 6 | 8 3/4 | FIELD/APPL VERIFY A572-5036 | |
| | | 1 | c212 | C4x5.4 | 6 | 8 9/16 | FIELD/APPL VERIFY A572-5036 | |
| | | 10 | p5 | PL 1/2x3 | 0 | 10 | A572-50 | 41 |
| | | 1 | p298 | PL 1/4x1 9/16 | 0 | 4 | A572-50 | 0 |
| | | 1 | c277 | C4x5.4 | 6 | 8 9/16 | A572-50 | 36 |
| | | 1 | c213 | C4x5.4 | 6 | 8 9/16 | FIELD/APPL VERIFY A572-5036 | 318 |
| | | 8 | | 3/4 Dia A325N | 0 | 2 | 2HD WASH | 6 |

HOLES: 13/16" DIA U.N.O.
SURFACE PREP: SSPC-SP 2
FINISH: **PPG COATING 94-232**
ELECTRODES: E70XX-(LOW HYDROGEN)

GENERAL NOTES:

ALL DIMENSIONS FROM END OF MAIN MATERIAL U/N.
ALL VERTICAL SPACING OF HOLES TO BE 3" U/N.
ALL COPES TO HAVE 1/2" MINIMUM RADIUS.

CHARGES FOR CORRECTIVE WORK WILL NOT BE HONORED UNLESS PREVIOUS APPROVAL IS OBTAINED FROM JEFFORDS STEEL AND ENGINEERING COMPANY.

MEMBERS ARE TO BE ERECTED SO THAT MARKED END IS IN THE SAME LOCATION AS ON THE ERECTION DRAWING.

ON SHOP BOLTED CLIP ANGLES ON BEAMS: ON PIECE MARK END, INSERT SHOP BOLTS SO THE HEAD OF THE BOLT IS ON THE NEAR SIDE OF BEAM. ON THE NON-PIECE MARK END, INSERT BOLTS SO THE HEAD OF THE BOLT IS ON THE FAR SIDE OF BEAM.

REVISIONS

| rev# | date | description |
|---|---|---|
| | | |

| | |
|---|---|
| job no. | 4497 |
| date | Feb 22 201 |
| drawn by | TC |
| checked by | CHECKER |

PRINT RECORD

| | | |
|---|---|---|
| APP-1-6 | | |
| APP-2-9 | | |

DRAWINGS PREPARED BY,
GLOBAL DETAILING, INC.
JOB # 11-390

customer
ENCOMPASS DEVELOP
DESIGN CONSTRUCTION

Jeffords
STEEL AND ENGINEERING COMPANY
P.O. BOX 40-4398 ROUTE #22
PLATTSBURGH,N.Y 12901
518-561-4061

project
AKWESASNE MOHAWK
CASINO
873 STATE HIGHWAY 37
AKWESASNE, NY

1F4

Global Detailing Inc

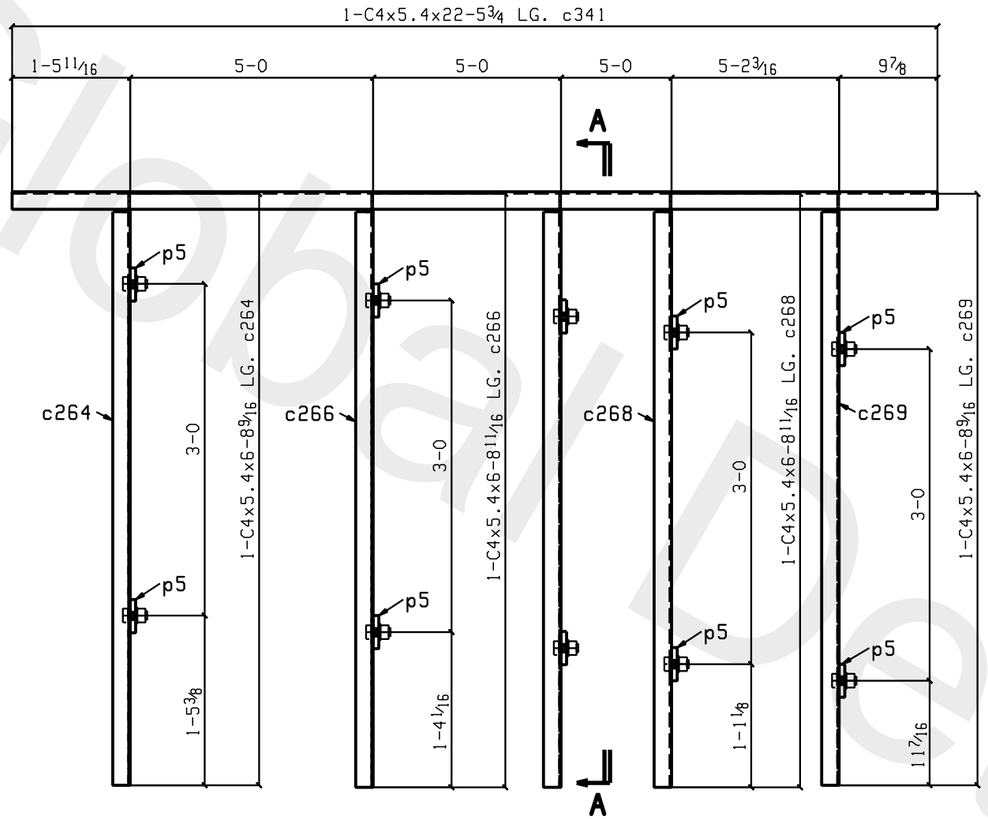


## ONE FRAME 1F5

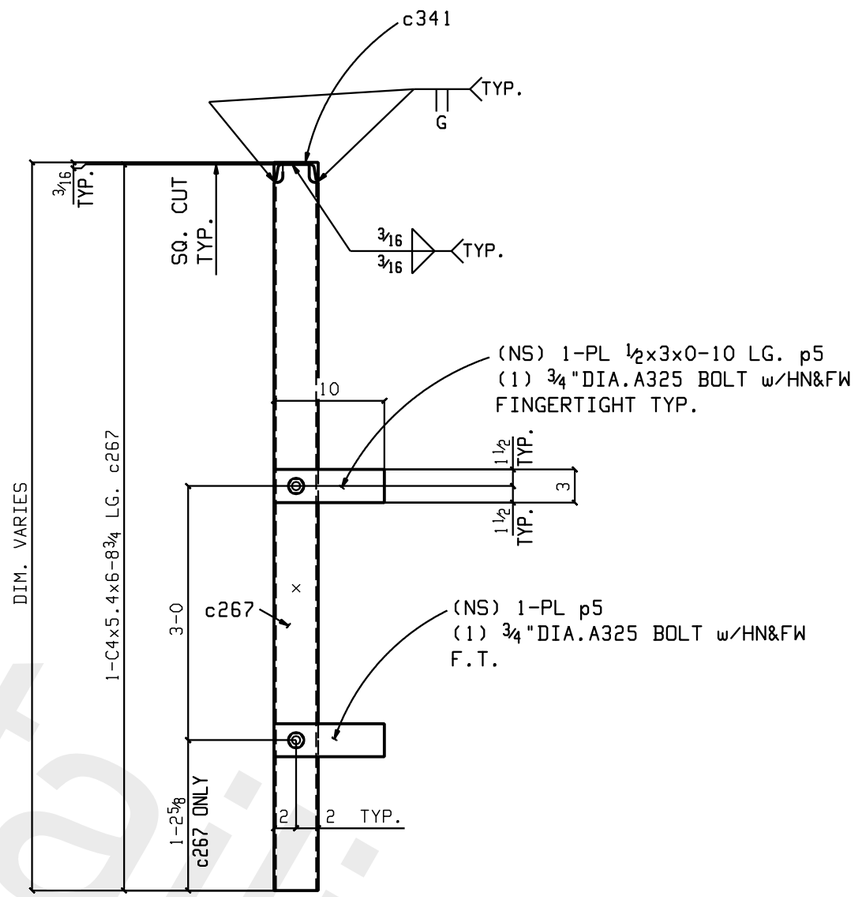


## Section A-A

1F5

## BILL OF MATERIAL

| LIFT NO. | LIFT QTY. | NO. OF PIECES | PIECE MARK | MATERIAL | LENGTH FT. | LENGTH IN. | REMARKS | WEIGHT TOTAL |
|---|---|---|---|---|---|---|---|---|
| | | ONE | 1F5 | FRAME | | | | 347 |
| | | 1 | c341 | C4x5.4 | 22 | 5¾ | A572-50 | 121 |
| | | 1 | c269 | C4x5.4 | 6 | 8 9/16 | A572-50 | 36 |
| | | 10 | p5 | PL½x3 | 0 | 10 | A572-50 | 41 |
| | | 1 | c268 | C4x5.4 | 6 | 8¾ | A572-50 | 36 |
| | | 1 | c267 | C4x5.4 | 6 | 8¾ | A572-50 | 36 |
| | | 1 | c266 | C4x5.4 | 6 | 8¾ | A572-50 | 36 |
| | | 1 | c264 | C4x5.4 | 6 | 8 9/16 | A572-50 | 36 |
| | | 10 | | ¾ Dia A325N | 0 | 1¾ | 1HD WASH | 347 6 |

HOLES: 13/16" DIA U.N.O.
SURFACE PREP: SSPC-SP 2
FINISH: **PPG COATING 94-232**
ELECTRODES: E70XX-(LOW HYDROGEN)

GENERAL NOTES:

ALL DIMENSIONS FROM END OF MAIN MATERIAL U/N.
ALL VERTICAL SPACING OF HOLES TO BE 3" U/N.
ALL COPES TO HAVE ½" MINIMUM RADIUS.

CHARGES FOR CORRECTIVE WORK WILL NOT BE HONORED UNLESS PREVIOUS APPROVAL IS OBTAINED FROM JEFFORDS STEEL AND ENGINEERING COMPANY.

MEMBERS ARE TO BE ERECTED SO THAT MARKED END IS IN THE SAME LOCATION AS ON THE ERECTION DRAWING.

ON SHOP BOLTED CLIP ANGLES ON BEAMS: ON PIECE MARK END, INSERT SHOP BOLTS SO THE HEAD OF THE BOLT IS ON THE NEAR SIDE OF BEAM. ON THE NON-PIECE MARK END, INSERT BOLTS SO THE HEAD OF THE BOLT IS ON THE FAR SIDE OF BEAM.

REVISIONS

| rev# | date | description |
|---|---|---|
| | | |

| | |
|---|---|
| job no. | 4497 |
| date | Feb 22 201 |
| drawn by | TC |
| checked by | CHECKER |

PRINT RECORD

| | | |
|---|---|---|
| APP-1-6 | | |
| APP-2-9 | | |

DRAWINGS PREPARED BY,
GLOBAL DETAILING, INC.
JOB # 11-390

customer
ENCOMPASS DEVELOP
DESIGN CONSTRUCTION

Jeffords
STEEL AND ENGINEERING COMPANY
P.O. BOX 40-4398 ROUTE #22
PLATTSBURGH,N.Y 12901
518-561-4061

project
AKWESASNE MOHAWK
CASINO
873 STATE HIGHWAY 37
AKWESASNE, NY

1F5

Global Detailing Inc

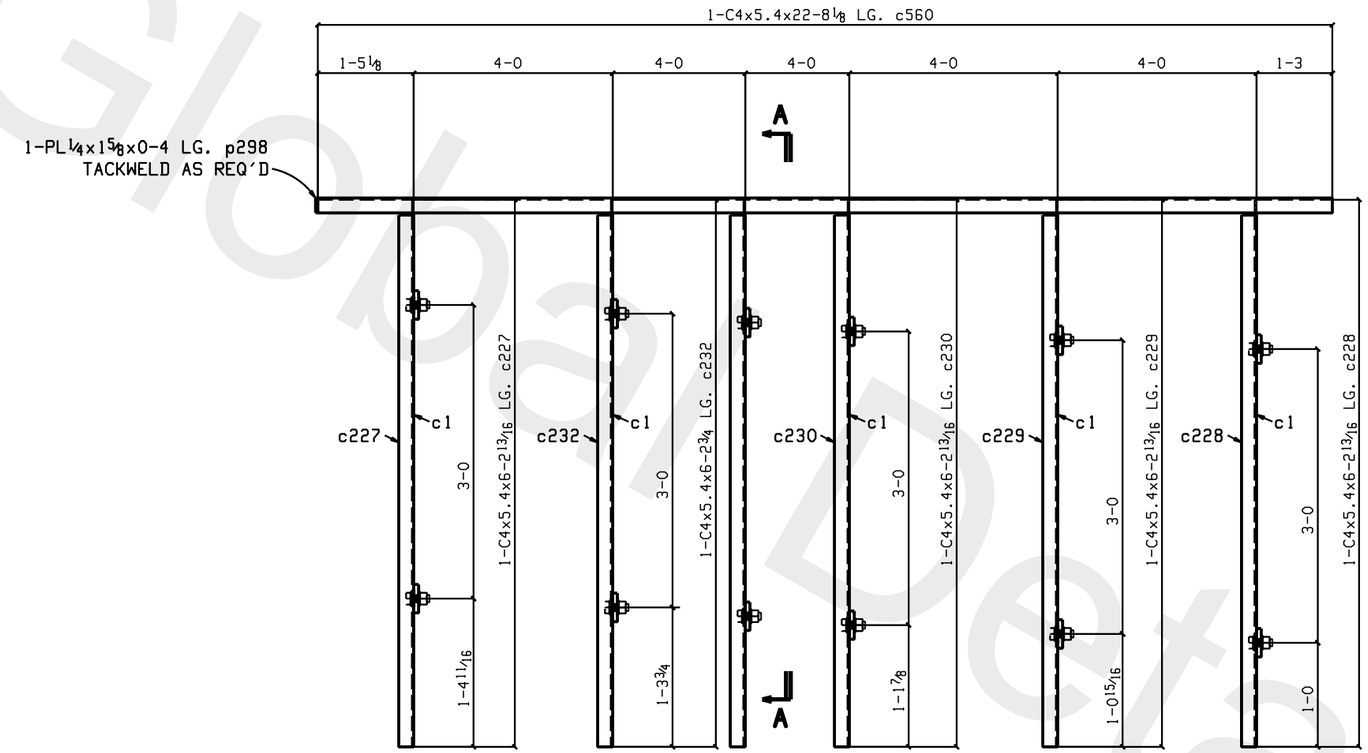


## ONE FRAME 1F6

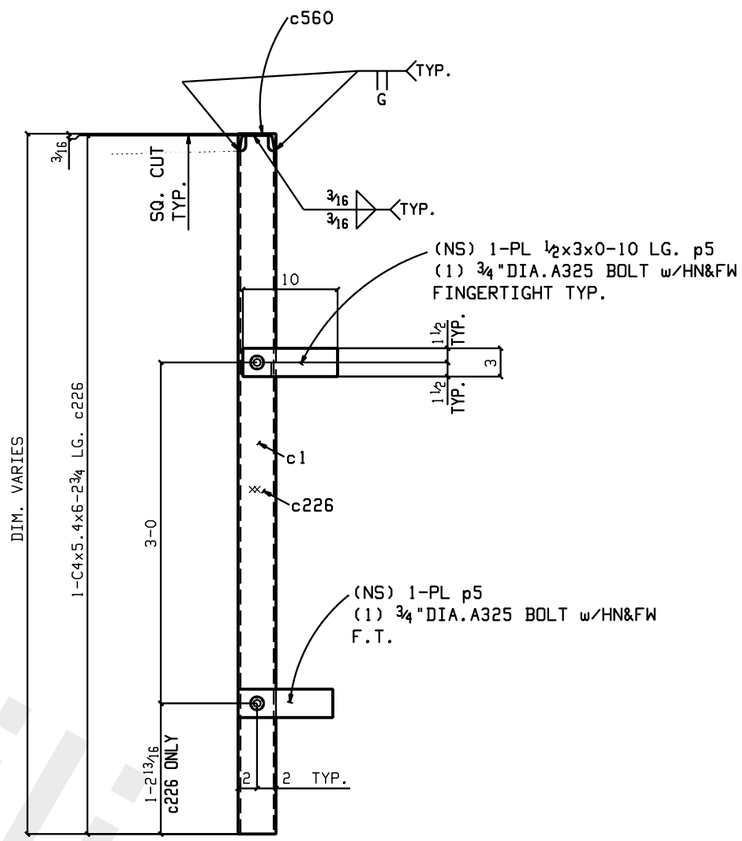


## Section A-A

1F6

# BILL OF MATERIAL

| LIFT NO. | LIFT QTY. | NO. OF PIECES | PIECE MARK | MATERIAL | LENGTH FT. | LENGTH IN. | REMARKS | WEIGHT TOTAL |
|---|---|---|---|---|---|---|---|---|
| | | ONE | 1F6 | FRAME | | | | 577 |
| | | 1 | c560 | C4x5.4 | 22 | 8 1/8 | A572-50 | 122 |
| | | 1 | c226 | C4x5.4 | 6 | 2 3/4 | FIELD/APPL VERIFY | A572-5033 |
| | | 1 | c227 | C4x5.4 | 6 | 2 3/4 | FIELD/APPL VERIFY | A572-5033 |
| | | 1 | c228 | C4x5.4 | 6 | 2 3/4 | FIELD/APPL VERIFY | A572-5033 |
| | | 1 | c229 | C4x5.4 | 6 | 2 3/4 | FIELD/APPL VERIFY | A572-5033 |
| | | 1 | c230 | C4x5.4 | 6 | 2 3/4 | FIELD/APPL VERIFY | A572-5033 |
| | | 1 | c232 | C4x5.4 | 6 | 2 3/4 | FIELD/APPL VERIFY | A572-5033 |
| | | 12 | p5 | PL 1/2x3 | 0 | 10 | A572-50 | 57 49 |
| | | 1 | p298 | PL 1/4x1 9/16 | 0 | 4 | A572-50 | 0 |
| | | 6 | c1 | C4x5.4 | 6 | 2 3/4 | A572-50 | 199 |

HOLES: 13/16" DIA U.N.O.
SURFACE PREP: SSPC-SP 2
FINISH: **PPG COATING 94-232**
ELECTRODES: E70XX-(LOW HYDROGEN)

GENERAL NOTES:

ALL DIMENSIONS FROM END OF MAIN MATERIAL U/N.
ALL VERTICAL SPACING OF HOLES TO BE 3" U/N.
ALL COPES TO HAVE 1/2" MINIMUM RADIUS.

CHARGES FOR CORRECTIVE WORK WILL NOT BE HONORED UNLESS PREVIOUS APPROVAL IS OBTAINED FROM JEFFORDS STEEL AND ENGINEERING COMPANY.

MEMBERS ARE TO BE ERECTED SO THAT MARKED END IS IN THE SAME LOCATION AS ON THE ERECTION DRAWING.

ON SHOP BOLTED CLIP ANGLES ON BEAMS: ON PIECE MARK END, INSERT SHOP BOLTS SO THE HEAD OF THE BOLT IS ON THE NEAR SIDE OF BEAM. ON THE NON-PIECE MARK END, INSERT BOLTS SO THE HEAD OF THE BOLT IS ON THE FAR SIDE OF BEAM.

REVISIONS

| rev# | date | description |
|---|---|---|
| | | |

| | |
|---|---|
| job no. | 4497 |
| date | Feb 22 201 |
| drawn by | TC |
| checked by | CHECKER |

PRINT RECORD

| | | |
|---|---|---|
| APP-1-6 | | |
| APP-2-9 | | |

DRAWINGS PREPARED BY,
GLOBAL DETAILING, INC.
JOB # 11-390

customer
ENCOMPASS DEVELOP
DESIGN CONSTRUCTION

Jeffords
STEEL AND ENGINEERING COMPANY
P.O. BOX 40-4398 ROUTE #22
PLATTSBURGH,N.Y 12901
518-561-4061

project
AKWESASNE MOHAWK
CASINO
873 STATE HIGHWAY 37
AKWESASNE, NY

1F6

Global Detailing Inc

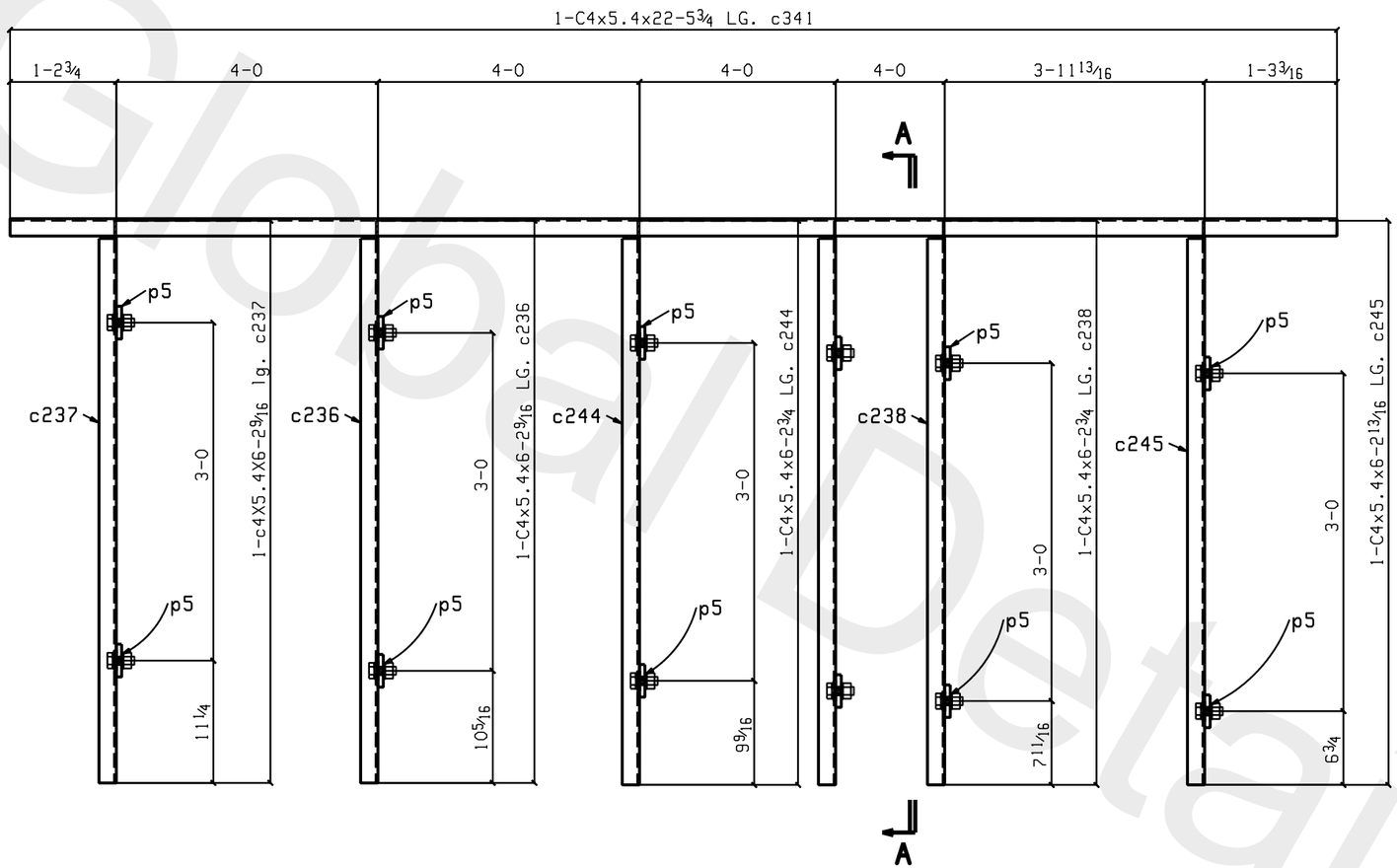


## ONE FRAME 1F7

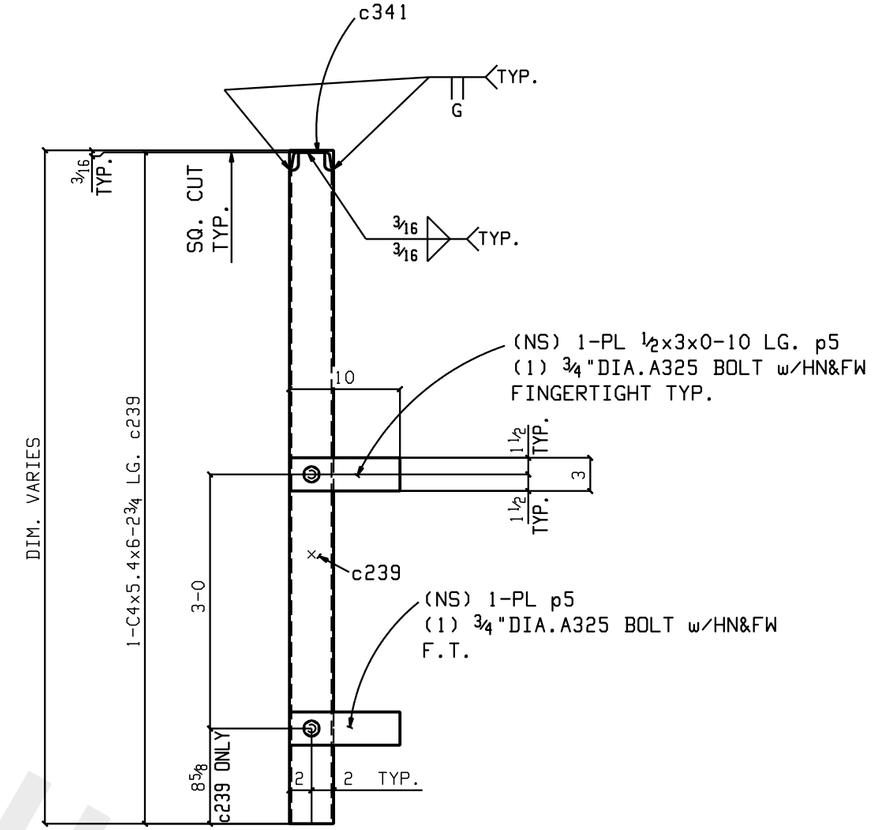


## Section A-A

1F7

## BILL OF MATERIAL

| LIFT NO. | LIFT QTY. | NO. OF PIECES | PIECE MARK | MATERIAL | LENGTH FT. | LENGTH IN. | REMARKS | WEIGHT TOTAL |
|---|---|---|---|---|---|---|---|---|
| | | ONE | 1F7 | FRAME | | | | 376 |
| | | 1 | c341 | C4x5.4 | 22 | 5 3/4 | A572-50 | 121 |
| | | 1 | c236 | C4x5.4 | 6 | 2 9/16 | FIELD/APPL VERIFY A572-5033 | |
| | | 12 | p5 | PL 1/2x3 | 0 | 10 | A572-50 | 49 |
| | | 1 | c237 | C4x5.4 | 6 | 2 9/16 | FIELD/APPL VERIFY A572-5033 | |
| | | 1 | c238 | C4x5.4 | 6 | 2 3/4 | FIELD/APPL VERIFY A572-5033 | |
| | | 1 | c239 | C4x5.4 | 6 | 2 3/4 | FIELD/APPL VERIFY A572-5033 | |
| | | 1 | c244 | C4x5.4 | 6 | 2 3/4 | FIELD/APPL VERIFY A572-5033 | |
| | | 1 | c245 | C4x5.4 | 6 | 2 3/4 | FIELD/APPL VERIFY A572-5033 | |
| | | 12 | | 3/4 Dia A325N | 0 | 2 | 2HD WASH | 8 |

HOLES: 13/16" DIA U.N.O.
SURFACE PREP: SSPC-SP 2
FINISH: **PPG COATING 94-232**
ELECTRODES: E70XX-(LOW HYDROGEN)

GENERAL NOTES:

ALL DIMENSIONS FROM END OF MAIN MATERIAL U/N.
ALL VERTICAL SPACING OF HOLES TO BE 3" U/N.
ALL COPES TO HAVE 1/2" MINIMUM RADIUS.

CHARGES FOR CORRECTIVE WORK WILL NOT BE HONORED UNLESS PREVIOUS APPROVAL IS OBTAINED FROM JEFFORDS STEEL AND ENGINEERING COMPANY.

MEMBERS ARE TO BE ERECTED SO THAT MARKED END IS IN THE SAME LOCATION AS ON THE ERECTION DRAWING.

ON SHOP BOLTED CLIP ANGLES ON BEAMS: ON PIECE MARK END, INSERT SHOP BOLTS SO THE HEAD OF THE BOLT IS ON THE NEAR SIDE OF BEAM. ON THE NON-PIECE MARK END, INSERT BOLTS SO THE HEAD OF THE BOLT IS ON THE FAR SIDE OF BEAM.

REVISIONS

| rev# | date | description |
|---|---|---|
| | | |

| | |
|---|---|
| job no. | 4497 |
| date | Feb 22 201 |
| drawn by | TC |
| checked by | CHECKER |

PRINT RECORD

| | | |
|---|---|---|
| APP-1-6 | | |
| APP-2-9 | | |

DRAWINGS PREPARED BY,
GLOBAL DETAILING, INC.
JOB # 11-390

customer
ENCOMPASS DEVELOP
DESIGN CONSTRUCTION

Jeffords
STEEL AND ENGINEERING COMPANY
P.O. BOX 40-4398 ROUTE #22
PLATTSBURGH,N.Y 12901
518-561-4061

project
AKWESASNE MOHAWK
CASINO
873 STATE HIGHWAY 37
AKWESASNE, NY

1F7

Global Detailing Inc

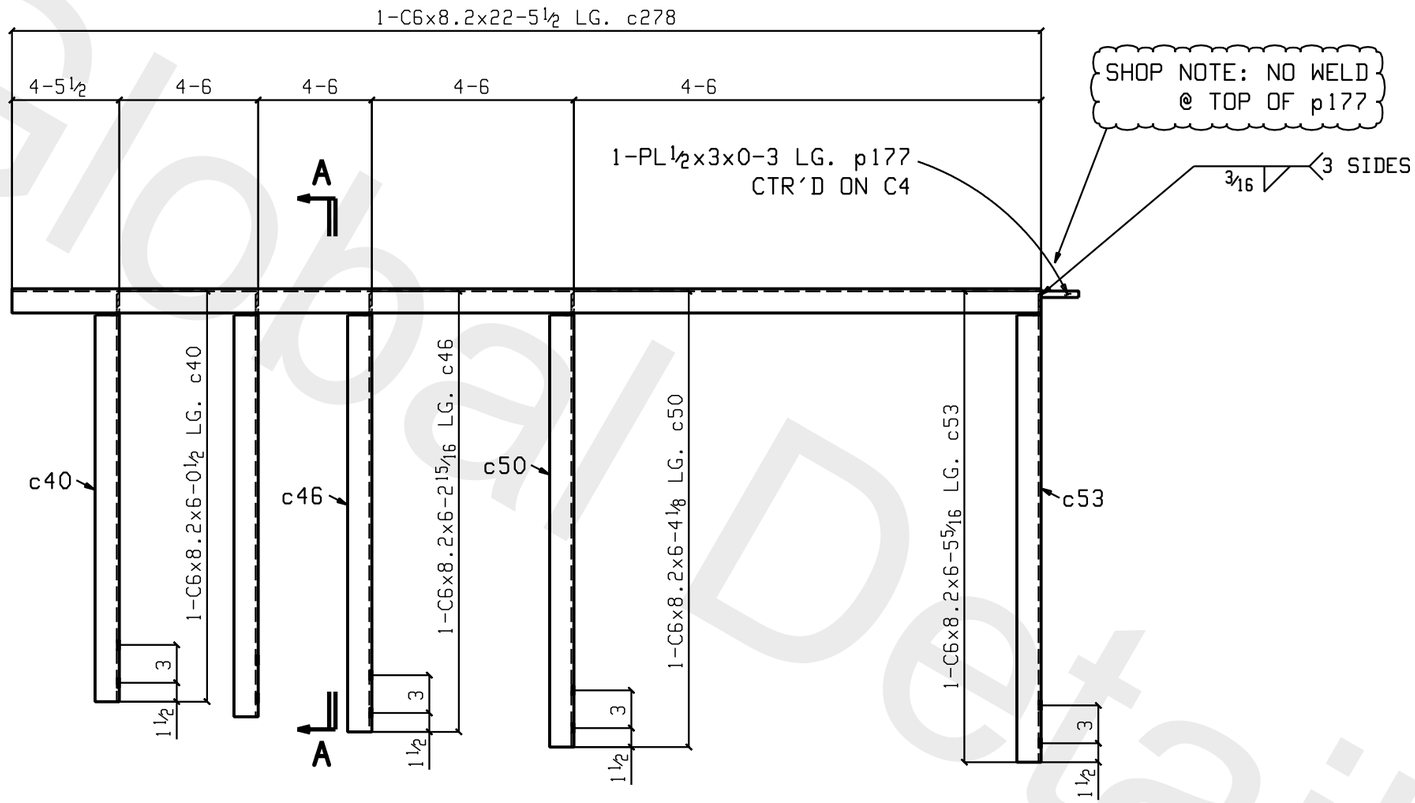


## ONE FRAME 1F8

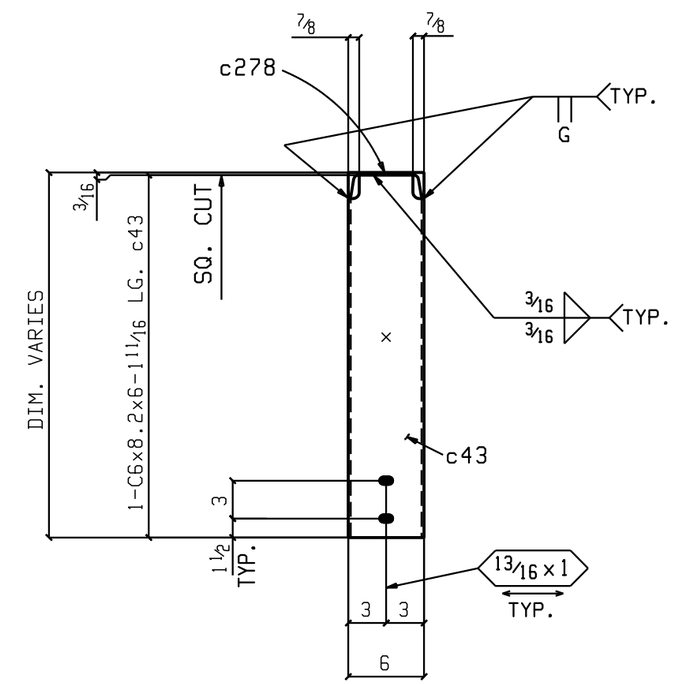


## Section A-A

1F8

FIELD BOLTS:
(10) ¾"DIA. A325N x 1½ 1HD. WASH.

DRAWINGS PREPARED BY,
GLOBAL DETAILING, INC.
JOB # 11-390

## BILL OF MATERIAL

| LIFT NO. | LIFT QTY. | NO. OF PIECES | PIECE MARK | MATERIAL | LENGTH FT. | LENGTH IN. | REMARKS | WEIGHT TOTAL |
|---|---|---|---|---|---|---|---|---|
| | | ONE | 1F8 | FRAME | | | | 437 |
| | | 1 | c278 | C6x8.2 | 22 | 5½ | A572-50 | 184 |
| | | 1 | c53 | C6x8.2 | 6 | 5 5/16 | A572-50 | 52 |
| | | 1 | p177 | PL½x3 | 0 | 3 | A572-50 | 1 |
| | | 1 | c40 | C6x8.2 | 6 | 0½ | A572-50 | 49 |
| | | 1 | c43 | C6x8.2 | 6 | 1 11/16 | A572-50 | 49 |
| | | 1 | c46 | C6x8.2 | 6 | 2 15/16 | A572-50 | 50 |
| | | 1 | c50 | C6x8.2 | 6 | 4⅛ | A572-50 | 51 |
| | | | | | | | | 437 |
| | | | | FIELD BOLTS | | | | |
| | | 10 | | ¾ Dia A325N | 0 | 1½ | 1HD WASH | |

HOLES: 13/16" DIA U.N.O.
SURFACE PREP: SSPC-SP 2
FINISH: **PPG COATING 94-232**
ELECTRODES: E70XX-(LOW HYDROGEN)

GENERAL NOTES:

ALL DIMENSIONS FROM END OF MAIN MATERIAL U/N.
ALL VERTICAL SPACING OF HOLES TO BE 3" U/N.
ALL COPES TO HAVE ½" MINIMUM RADIUS.

CHARGES FOR CORRECTIVE WORK WILL NOT BE HONORED UNLESS PREVIOUS APPROVAL IS OBTAINED FROM JEFFORDS STEEL AND ENGINEERING COMPANY.

MEMBERS ARE TO BE ERECTED SO THAT MARKED END IS IN THE SAME LOCATION AS ON THE ERECTION DRAWING.

ON SHOP BOLTED CLIP ANGLES ON BEAMS: ON PIECE MARK END, INSERT SHOP BOLTS SO THE HEAD OF THE BOLT IS ON THE NEAR SIDE OF BEAM. ON THE NON-PIECE MARK END, INSERT BOLTS SO THE HEAD OF THE BOLT IS ON THE FAR SIDE OF BEAM.

REVISIONS

| rev# | date | description |
|---|---|---|
| | | |

| | |
|---|---|
| job no. | 4497 |
| date | Feb 22 201 |
| drawn by | TC |
| checked by | GDI |

PRINT RECORD

| | | |
|---|---|---|
| APP-1-6 | | |
| FAB 2-14 | | |

customer
ENCOMPASS DEVELOP
DESIGN CONSTRUCTION

Jeffords
STEEL AND ENGINEERING COMPANY
P.O. BOX 40-4398 ROUTE #22
PLATTSBURGH,N.Y 12901
518-561-4061

project
AKWESASNE MOHAWK
CASINO
873 STATE HIGHWAY 37
AKWESASNE, NY

1F8

Global Detailing Inc

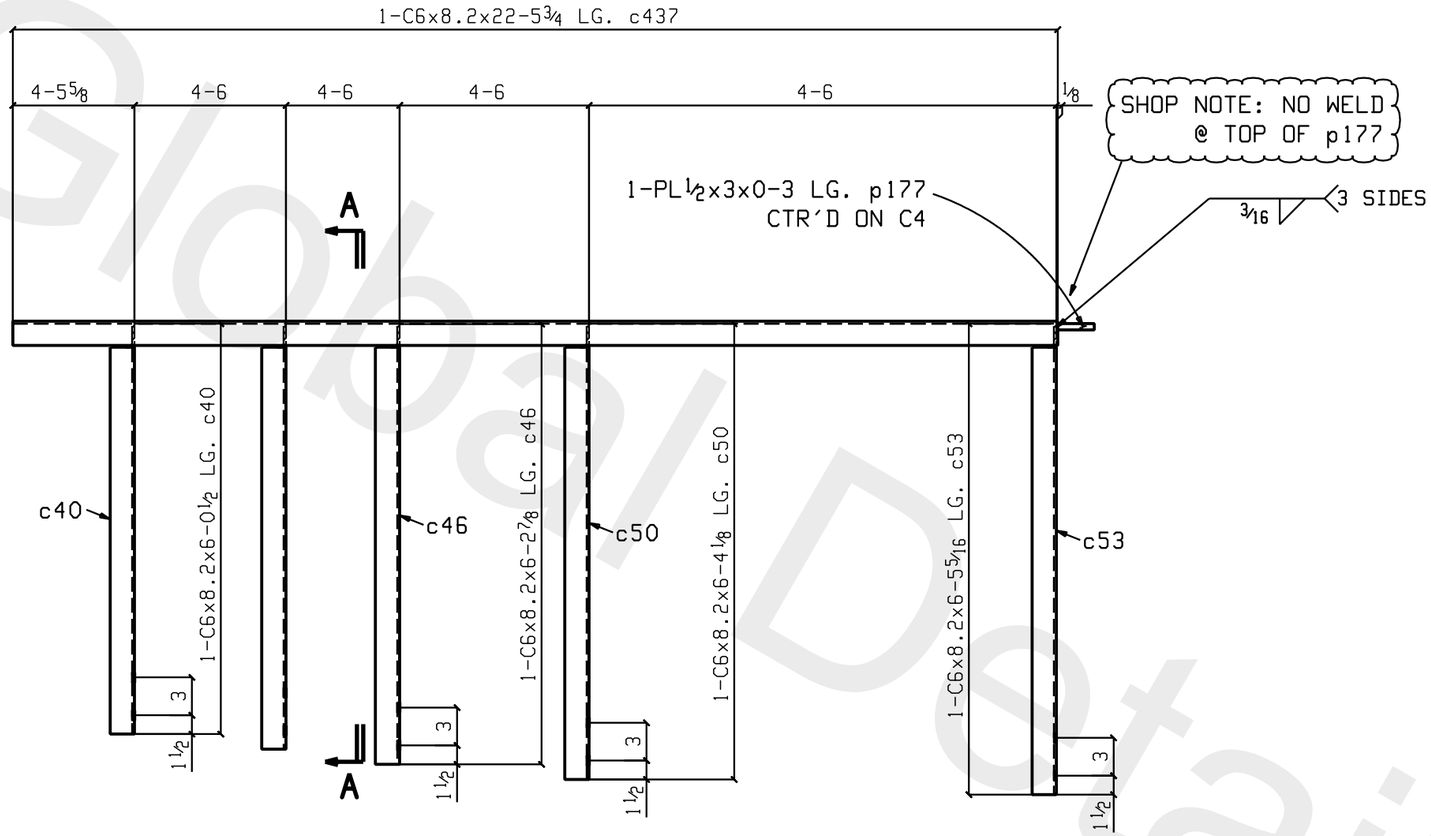


## ONE FRAME 1F9

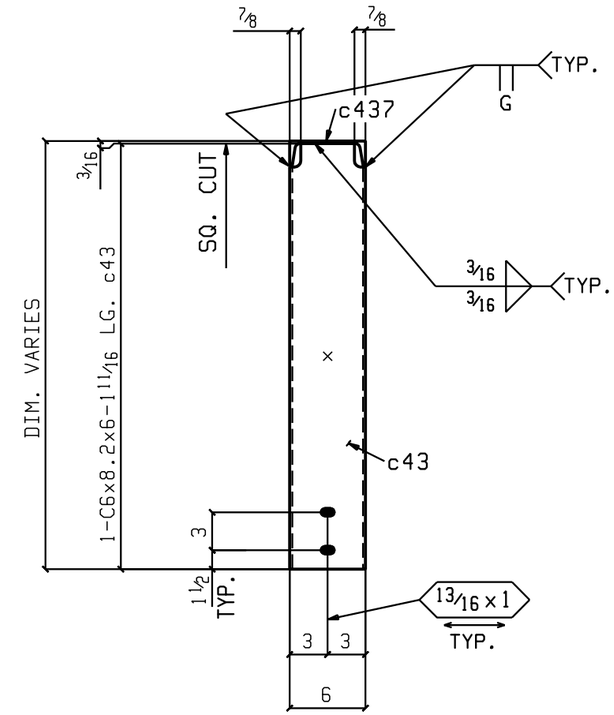


## Section A-A

1F9

## BILL OF MATERIAL

| LIFT NO. | LIFT QTY. | NO. OF PIECES | PIECE MARK | MATERIAL | LENGTH FT. | LENGTH IN. | REMARKS | WEIGHT TOTAL |
|---|---|---|---|---|---|---|---|---|
| | | ONE | 1F9 | FRAME | | | | 438 |
| | | 1 | c437 | C6x8.2 | 22 | 5¾ | A572-50 | 184 |
| | | 1 | c53 | C6x8.2 | 6 | 5 5/16 | A572-50 | 52 |
| | | 1 | p177 | PL½x3 | 0 | 3 | A572-50 | 1 |
| | | 1 | c40 | C6x8.2 | 6 | 0½ | A572-50 | 49 |
| | | 1 | c43 | C6x8.2 | 6 | 1 11/16 | A572-50 | 49 |
| | | 1 | c46 | C6x8.2 | 6 | 2⅞ | A572-50 | 51 |
| | | 1 | c50 | C6x8.2 | 6 | 4⅛ | A572-50 | 51 |
| | | | | | | | | 438 |
| | | | FIELD BOLTS | | | | | |
| | | 10 | | ¾ Dia A325N | 0 | 1½ | 1HD WASH | |

FIELD BOLTS:
(10) ¾"DIA. A325N x 1½ 1HD. WASH.

HOLES: 13/16" DIA U.N.O.
SURFACE PREP: SSPC-SP 2
FINISH: **PPG COATING 94-232**
ELECTRODES: E70XX-(LOW HYDROGEN)

GENERAL NOTES:

ALL DIMENSIONS FROM END OF MAIN MATERIAL U/N.
ALL VERTICAL SPACING OF HOLES TO BE 3" U/N.
ALL COPES TO HAVE ½" MINIMUM RADIUS.

CHARGES FOR CORRECTIVE WORK WILL NOT BE HONORED UNLESS PREVIOUS APPROVAL IS OBTAINED FROM JEFFORDS STEEL AND ENGINEERING COMPANY.

MEMBERS ARE TO BE ERECTED SO THAT MARKED END IS IN THE SAME LOCATION AS ON THE ERECTION DRAWING.

ON SHOP BOLTED CLIP ANGLES ON BEAMS: ON PIECE MARK END, INSERT SHOP BOLTS SO THE HEAD OF THE BOLT IS ON THE NEAR SIDE OF BEAM. ON THE NON-PIECE MARK END, INSERT BOLTS SO THE HEAD OF THE BOLT IS ON THE FAR SIDE OF BEAM.

REVISIONS

| rev# | date | description |
|---|---|---|
| | | |

| | |
|---|---|
| job no. | 4497 |
| date | Feb 22 201 |
| drawn by | TC |
| checked by | GDI |

PRINT RECORD

| | | |
|---|---|---|
| APP-1-6 | | |
| FAB 2-14 | | |

DRAWINGS PREPARED BY,
GLOBAL DETAILING, INC.
JOB # 11-390

customer
ENCOMPASS DEVELOP
DESIGN CONSTRUCTION

Jeffords
STEEL AND ENGINEERING COMPANY
P.O. BOX 40-4398 ROUTE #22
PLATTSBURGH,N.Y 12901
518-561-4061

project
AKWESASNE MOHAWK
CASINO
873 STATE HIGHWAY 37
AKWESASNE, NY

1F9

Global Detailing Inc

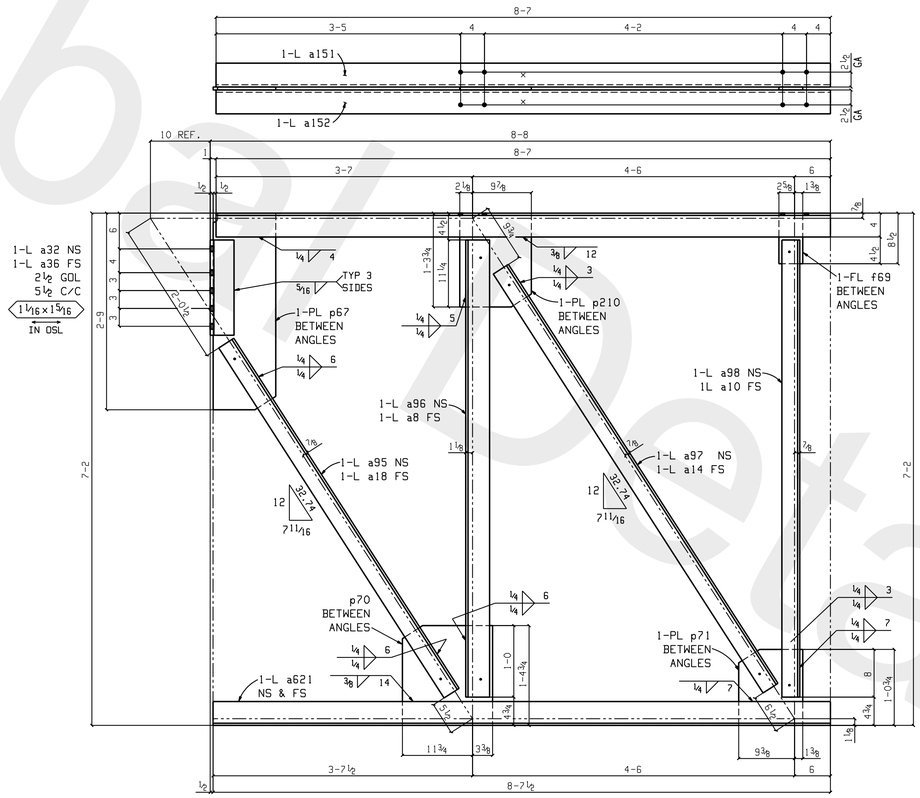


## 2 TRUSSES 1T1

DRAWINGS PREPARED BY,
GLOBAL DETAILING, INC.
JOB # 11-390

## BILL OF MATERIAL

| LIFT NO. | LIFT QTY. | NO. OF PIECES | PIECE MARK | MATERIAL | LENGTH FT. | LENGTH IN. | REMARKS | WEIGHT TOTAL |
|---|---|---|---|---|---|---|---|---|
| | | 2 | 1T1 | TRUSS | | | | 1824 |
| | | 2 | a151 | L4x4x3/8 | 8 | 7 | A572-50 | 168 |
| | | 2 | a152 | L4x4x3/8 | 8 | 7 | A572-50 | 168 |
| | | 2 | a32 | L4x4x5/8 | 1 | 4 | A572-50 | 40 |
| | | 2 | a36 | L4x4x5/8 | 1 | 4 | A572-50 | 40 |
| | | 2 | p210 | PL1/2x12 | 1 | 3 3/4 | A572-50 | 52 |
| | | 2 | p67 | PL1/2x10 1/2 | 2 | 9 | A572-50 | 97 |
| | | 2 | f69 | FL1/2x4 | 0 | 8 1/2 | A572-50 | 10 |
| | | 2 | a95 | L3x3x3/8 | 5 | 9 7/8 | A572-50 | 84 |
| | | 2 | a18 | L3x3x3/8 | 5 | 9 7/8 | A572-50 | 84 |
| | | 2 | a96 | L4x4x3/8 | 6 | 4 3/4 | A572-50 | 125 |
| | | 2 | a8 | L4x4x3/8 | 6 | 4 3/4 | A572-50 | 125 |
| | | 2 | a97 | L3x3x3/8 | 6 | 11 5/8 | A572-50 | 100 |
| | | 2 | a14 | L3x3x3/8 | 6 | 11 5/8 | A572-50 | 100 |
| | | 2 | a98 | L3x3x3/8 | 6 | 4 3/4 | A572-50 | 92 |
| | | 2 | a10 | L3x3x3/8 | 6 | 4 3/4 | A572-50 | 92 |
| | | 4 | a621 | L4x4x3/8 | 8 | 7 1/2 | A572-50 | 338 |
| | | 2 | p70 | PL1/2x15 1/8 | 1 | 4 3/4 | A572-50 | 71 |
| | | 2 | p71 | PL1/2x10 3/4 | 1 | 0 3/4 | A572-50 | 38 |

Total weight :

HOLES: 13/16" DIA U.N.O.
SURFACE PREP: SSPC-SP 2
FINISH: **1 SHOP COAT PPG COATING 94-232**
ELECTRODES: E70XX-(LOW HYDROGEN)

GENERAL NOTES:

ALL DIMENSIONS FROM END OF MAIN MATERIAL UNLESS NOTED.
ALL VERTICAL SPACING OF HOLES TO BE 3" UNLESS NOTED.
ALL COPES TO HAVE 1/2" MINIMUM RADIUS.

CHARGES FOR CORRECTIVE WORK WILL NOT BE HONORED UNLESS PREVIOUS APPROVAL IS OBTAINED FROM JEFFORDS STEEL AND ENGINEERING COMPANY

MEMBERS ARE TO BE ERECTED SO THAT MARKED END IS IN THE SAME LOCATION AS ON THE E DWG

ON SHOP BOLTED CLIP ANGLES ON BEAMS: ON PC MARK END, INSERT SHOP BOLTS SO THE HEAD OF THE BOLT IS ON THE NEAR SIDE OF BEAM. IN THE NON-PC MARK END, INSERT BOLTS SO THE HEAD OF THE BOLT IS ON THE FAR SIDE OF BEAM.

| print record | | | |
|---|---|---|---|
| 1 | APP | 1-6 | |
| 1 | FAB | 1-27 | |

job no. N474-1000
date 1-5-12
drawn by MC
checked by GBI

revisions

| rev# | date | description |
|---|---|---|
| | | |


Jeffords
STEEL AND ENGINEERING COMPANY
P.O. BOX 40-1398 ROUTE #22
PLATTSBURGH, N.Y. 12901
518-561-4061


customer
LORAN CONSTRUCTION INC
286 STATE HIGHWAY 37
HOGANSBURG NY

project
AKWESASNE MOHAWK
CASINO
873 STATE HIGHWAY 37
AKWESASNE NY

sheet
1T1

Global Detailing Inc

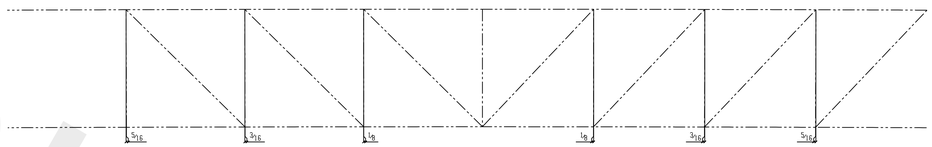


TRUSS 1T2 SCHEMATIC

## BILL OF MATERIAL

| LIFT NO. | LIFT QTY. | NO. OF PIECES | PIECE MARK | MATERIAL | LENGTH FT. | LENGTH IN. | REMARKS | WEIGHT TOTAL |
|---|---|---|---|---|---|---|---|---|
| | | 2 | 1T2 | TRUSS | | | | 25451 |
| | | 2 | w38 | W8x58 | 59 | 1 3/8 | C=3/4 CAMBER A572-50 | 6840 |
| | | 4 | a67 | L4x4x3/8 | 1 | 9 | A572-50 | 104 |
| | | 4 | a65 | L4x4x3/8 | 0 | 5 3/4 | A572-50 | 28 |
| | | 2 | p74 | PL1x30 | 3 | 1 1/2 | A572-50 | 615 |
| | | 2 | p76 | PL1x26 | 2 | 9 | A572-50 | 456 |
| | | 2 | p88 | PL1x26 | 2 | 9 | A572-50 | 456 |
| | | 2 | p90 | PL1x24 | 2 | 6 1/4 | A572-50 | 376 |
| | | 2 | p78 | PL1x16 | 2 | 0 | A572-50 | 206 |
| | | 2 | p82 | PL1x16 | 2 | 0 | A572-50 | 206 |
| | | 2 | p86 | PL1x16 | 2 | 0 | A572-50 | 206 |
| | | 2 | p80 | PL1x8 | 1 | 8 | A572-50 | 91 |
| | | 2 | a99 | L5x5x3/8 | 8 | 2 7/16 | A572-50 | 328 |
| | | 2 | a42 | L5x5x3/8 | 8 | 2 7/16 | A572-50 | 328 |
| | | 2 | w1109 | W8x58 | 58 | 3 1/16 | C=3/4 CAMBER/PREP A572-50 | 6751 |
| | | 2 | p73 | PL1x30 | 3 | 2 | A572-50 | 620 |
| | | 2 | p75 | PL1x26 | 2 | 9 1/2 | A572-50 | 460 |
| | | 2 | p77 | PL1x26 | 2 | 9 | A572-50 | 456 |
| | | 2 | p87 | PL1x26 | 2 | 9 | A572-50 | 456 |
| | | 2 | p89 | PL1x26 | 2 | 9 | A572-50 | 456 |
| | | 2 | p79 | PL1x20 | 3 | 10 3/4 | A572-50 | 505 |
| | | 2 | p83 | PL1x16 | 2 | 0 | A572-50 | 206 |
| | | 8 | p208 | PL1/2x7 | 0 | 8 | A572-50 | 63 |
| | | 2 | a112 | L5x5x3/8 | 5 | 2 1/2 | A572-50 | 208 |
| | | 2 | a55 | L5x5x3/8 | 5 | 2 1/2 | A572-50 | 208 |
| | | 2 | a111 | L5x5x3/8 | 8 | 6 1/4 | A572-50 | 341 |
| | | 2 | a54 | L5x5x3/8 | 8 | 6 1/4 | A572-50 | 341 |
| | | 2 | a110 | L5x5x1/2 | 5 | 7 1/2 | A572-50 | 182 |
| | | 2 | a53 | L5x5x1/2 | 5 | 7 1/2 | A572-50 | 182 |
| | | 2 | a109 | L4x4x1/2 | 8 | 6 13/16 | A572-50 | 219 |

## BILL OF MATERIAL

| LIFT NO. | LIFT QTY. | NO. OF PIECES | PIECE MARK | MATERIAL | LENGTH FT. | LENGTH IN. | REMARKS | WEIGHT TOTAL |
|---|---|---|---|---|---|---|---|---|
| | | 2 | a52 | L4x4x1/2 | 8 | 6 13/16 | A572-50 | 219 |
| | | 2 | a108 | L4x4x1/2 | 5 | 5 | A572-50 | 139 |
| | | 2 | a59 | L4x4x1/2 | 5 | 5 | A572-50 | 139 |
| | | 2 | a100 | L3 1/2x3 1/2x1/2 | 8 | 3 13/16 | A572-50 | 185 |
| | | 2 | a50 | L3 1/2x3 1/2x1/2 | 8 | 3 13/16 | A572-50 | 185 |
| | | 2 | a101 | L3 1/2x3 1/2x3/8 | 5 | 10 1/2 | A572-50 | 100 |
| | | 2 | a49 | L3 1/2x3 1/2x3/8 | 5 | 10 1/2 | A572-50 | 100 |
| | | 2 | a102 | L3 1/2x3 1/2x1/2 | 7 | 11 7/16 | A572-50 | 176 |
| | | 2 | a48 | L3 1/2x3 1/2x1/2 | 7 | 11 7/16 | A572-50 | 177 |
| | | 2 | a103 | L4x4x1/2 | 5 | 2 1/2 | A572-50 | 133 |
| | | 2 | a47 | L4x4x1/2 | 5 | 2 1/2 | A572-50 | 133 |
| | | 2 | a104 | L4x4x1/2 | 7 | 8 7/16 | A572-50 | 197 |
| | | 2 | a45 | L4x4x1/2 | 7 | 8 7/16 | A572-50 | 197 |
| | | 2 | a105 | L5x5x1/2 | 5 | 5 | A572-50 | 175 |
| | | 2 | a46 | L5x5x1/2 | 5 | 5 | A572-50 | 176 |
| | | 2 | a106 | L5x5x3/8 | 5 | 7 1/2 | A572-50 | 225 |
| | | 2 | a43 | L5x5x3/8 | 5 | 7 1/2 | A572-50 | 225 |
| | | 2 | a107 | L5x5x3/4 | 7 | 1 15/16 | A572-50 | 338 |
| | | 2 | a69 | L5x5x3/4 | 7 | 1 15/16 | A572-50 | 338 |
| | | | | | | | | |
| | | | | FIELD BOLTS | | | | |
| | | 8 | | 1 Dia A490N | 0 | 3 1/2 | 1HD WASH | |
| | | 12 | | 1 Dia A490N | 0 | 3 | 1HD WASH | |
| | | 16 | | 3/4 Dia A325N | 0 | 2 | 1HD WASH | |

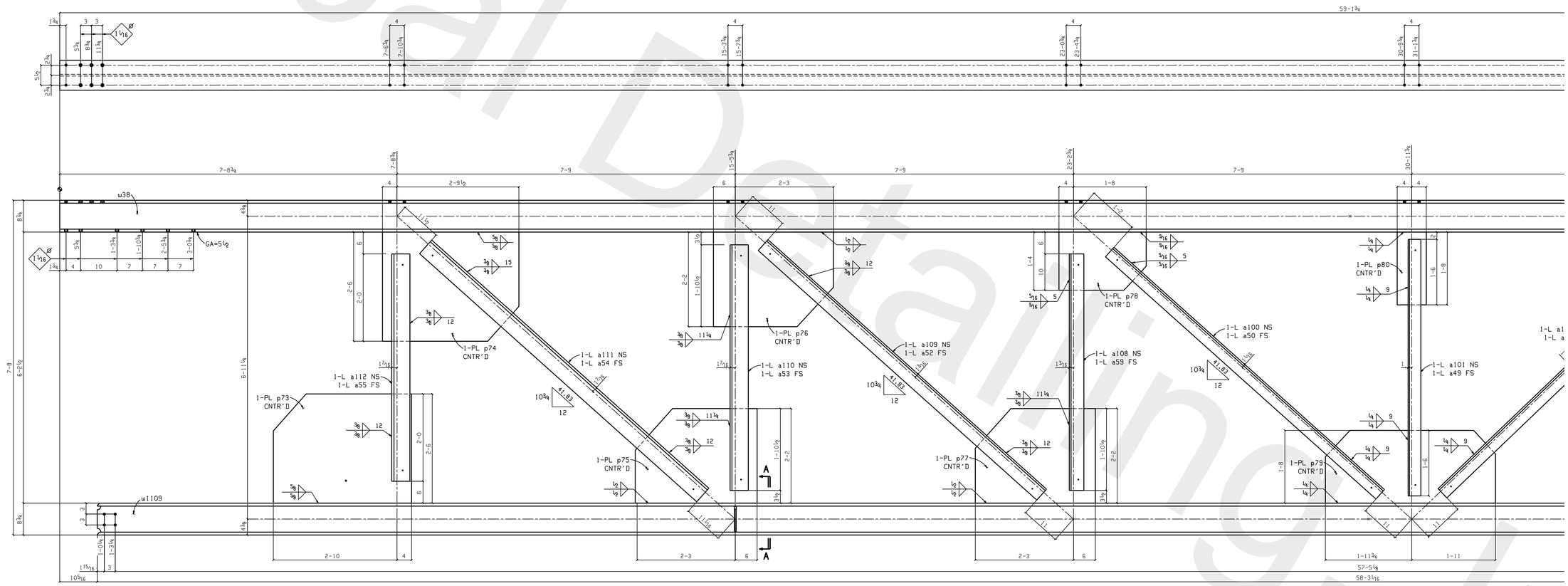


MATCHLINE SHEET 1T2a

MATCHLINE SHEET 1T2b

2 TRUSSES 1T2

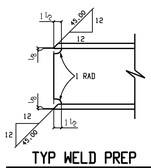


TYP WELD PREP

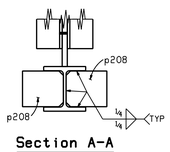


Section A-A

1T2

HOLES: 13/16" DIA U.N.O.
SURFACE PREP: SSPC-SP 2
FINISH: **1 SHOP COAT PPG COATING 94-232**
ELECTRODES: E70XX-(LOW HYDROGEN)

GENERAL NOTES:

ALL DIMENSIONS FROM END OF MAIN MATERIAL UNLESS NOTED.
ALL VERTICAL SPACING OF HOLES TO BE 3" UNLESS NOTED.
ALL COPES TO HAVE 1/2" MINIMUM RADIUS.
CHARGES FOR CORRECTIVE WORK WILL NOT BE HONORED UNLESS PREVIOUS APPROVAL IS OBTAINED FROM JEFFORDS STEEL AND ENGINEERING COMPANY
MEMBERS ARE TO BE ERECTED SO THAT MARKED END IS IN THE SAME LOCATION AS ON THE E DWG
ON SHOP BOLTED CLIP ANGLES ON BEAMS: ON PC MARK END, INSERT SHOP BOLTS SO THE HEAD OF THE BOLT IS ON THE NEAR SIDE OF BEAM. IN THE NON-PC MARK END, INSERT BOLTS SO THE HEAD OF THE BOLT IS ON THE FAR SIDE OF BEAM.

DRAWINGS PREPARED BY, GLOBAL DETAILING, INC. JOB # 11-390

| print record | | | | |
|---|---|---|---|---|
| 1 | APP | 1-6 | | |
| 1 | FAB | 1-27 | | |

job no. 4474-1000
date 1-4-12
drawn by MC
check by QB

| revisions | | |
|---|---|---|
| rev# | date | description |

customer
LORAN CONSTRUCTION INC
286 STATE HIGHWAY 37
HOGANSBURG, NY

project
AKWESASNE MOHAWK CASINO
873 STATE HIGHWAY 37
AKWESASNE, NY

STEEL AND ENGINEERING COMPANY
P.O. BOX 4-328 ROUTE 422
PLATTSBURGH, N.Y. 12901
518-561-4061

sheet
1T2a

Global Detailing, Inc.

Global Detailing, Inc.

## BILL OF MATERIAL

| LIFT NO. | LIFT QTY. | NO. OF PIECES | PIECE MARK | MATERIAL | LENGTH FT. | LENGTH IN. | REMARKS | WEIGHT TOTAL |
|---|---|---|---|---|---|---|---|---|

## BILL OF MATERIAL

| LIFT NO. | LIFT QTY. | NO. OF PIECES | PIECE MARK | MATERIAL | LENGTH FT. | LENGTH IN. | REMARKS | WEIGHT TOTAL |
|---|---|---|---|---|---|---|---|---|

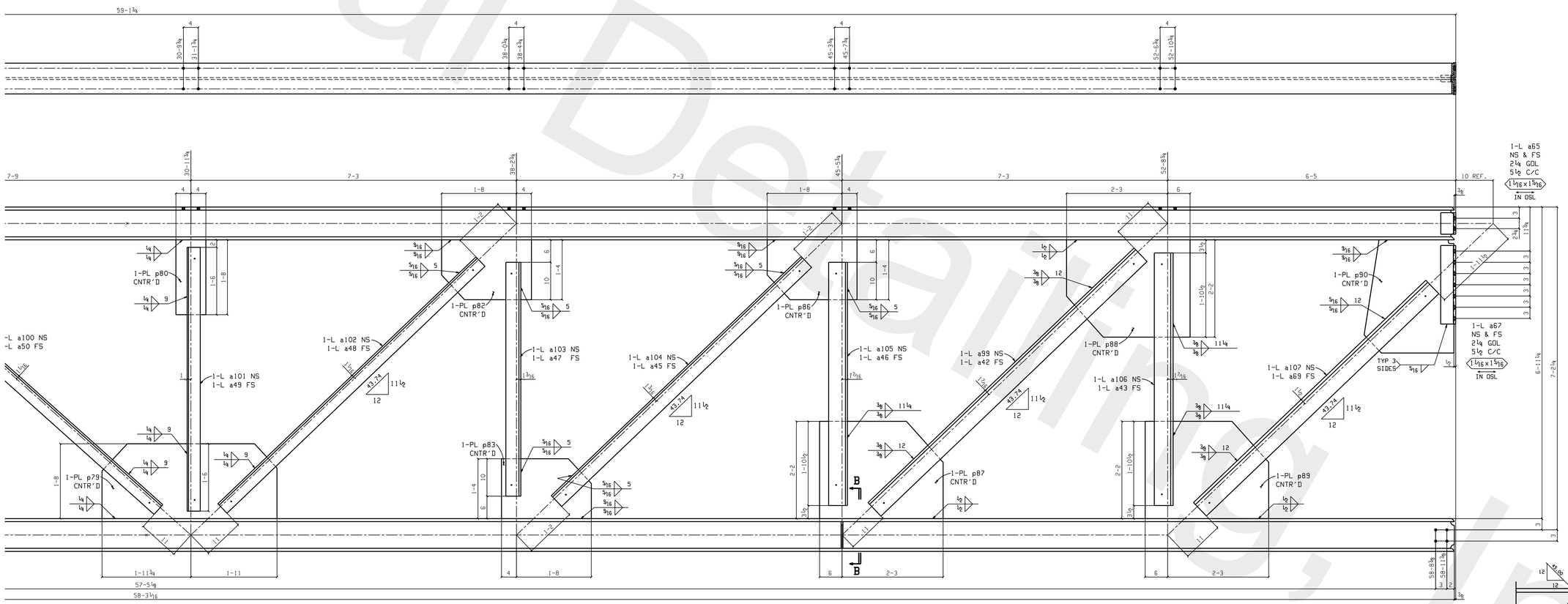


MATCHLINE SHEET 1T2a

MATCHLINE SHEET 1T2b

## 2 TRUSSES 1T2

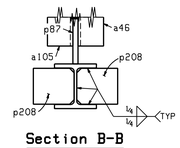


## Section B-B

1T2

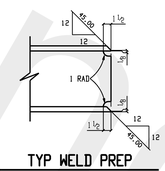


## TYP WELD PREP

HOLES: 13/16" DIA U.N.O.
SURFACE PREP: SSPC-SP 2
FINISH: **1 SHOP COAT PPG COATING 94-232**
ELECTRODES: E70XX-(LOW HYDROGEN)

GENERAL NOTES:

ALL DIMENSIONS FROM END OF MAIN MATERIAL UNLESS NOTED.
ALL VERTICAL SPACING OF HOLES TO BE 3" UNLESS NOTED.
ALL COPES TO HAVE ½" MINIMUM RADIUS.
CHARGES FOR CORRECTIVE WORK WILL NOT BE HONORED UNLESS PREVIOUS APPROVAL IS OBTAINED FROM JEFFORDS STEEL AND ENGINEERING COMPANY
MEMBERS ARE TO BE ERECTED SO THAT MARKED END IS IN THE SAME LOCATION AS ON THE E DWG
ON SHOP BOLTED CLIP ANGLES ON BEAMS: ON PC MARK END, INSERT SHOP BOLTS SO THE HEAD OF THE BOLT IS ON THE NEAR SIDE OF BEAM. IN THE NON-PC MARK END, INSERT BOLTS SO THE HEAD OF THE BOLT IS ON THE FAR SIDE OF BEAM.

DRAWINGS PREPARED BY, GLOBAL DETAILING, INC. JOB # 11-390

| print record | | |
|---|---|---|
| 1 | APP | 1-6 |
| 1 | FAB | 1-27 |

job no. 4474-1000
date 1-4-12
drawn by MC
check by QB

| revisions | | |
|---|---|---|
| rev# | date | description |

Jeffords
STEEL AND ENGINEERING COMPANY
P.O. BOX 4-329 ROUTE 422
PLATTSBURGH, N.Y. 12901
518-561-4061

customer
LORAN CONSTRUCTION INC
286 STATE HIGHWAY 37
HOGANSBURG, NY

project
AKWESASNE MOHAWK CASINO
873 STATE HIGHWAY 37
AKWESASNE, NY

sheet
1T2b

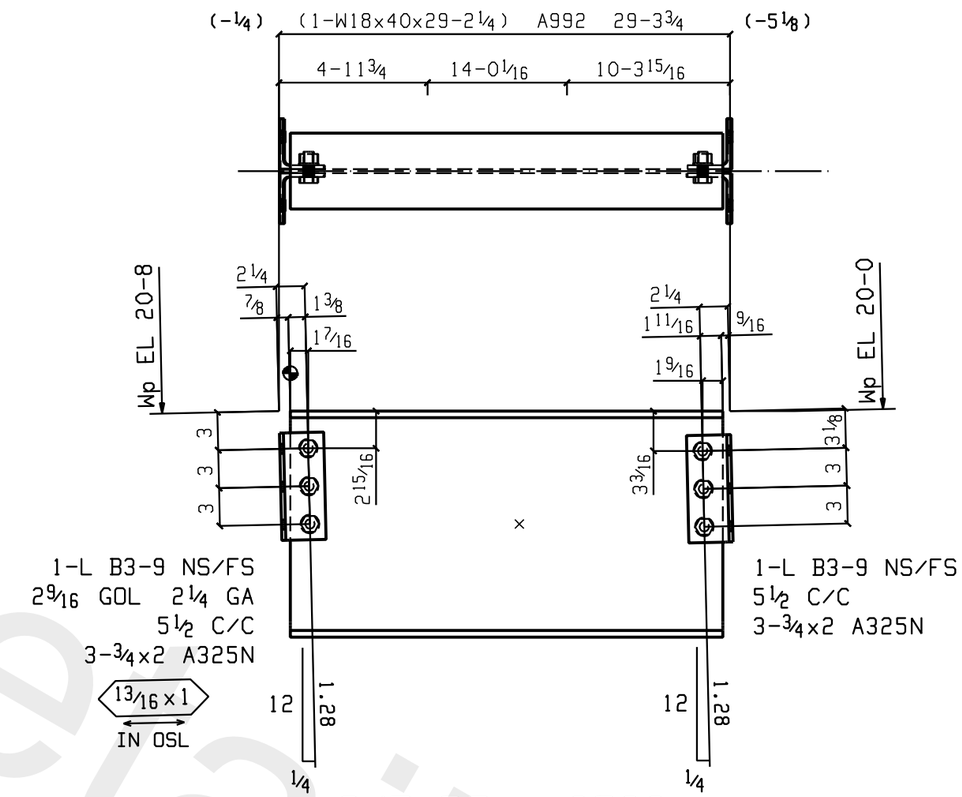


# ONE BEAM 2B33

| | |
|---|---|
| W | 17 7/8 x 5/16 |
| F | 6 x 1/2 |
| K | 1 3/16 x 13/16 |

## BILL OF MATERIAL

| LIFT NO. | LIFT QTY. | NO. OF PIECES | PIECE MARK | MATERIAL | LENGTH FT. | LENGTH IN. | REMARKS | WEIGHT TOTAL |
|---|---|---|---|---|---|---|---|---|
| 2 | 1 | ONE | 2B33 | BEAM | | | | 1193 |
| | | 1 | 2B33 | W18x40 | 29 | 2 1/4 | A992 | 1167 |
| | | 4 | B3-9 | L4x3 1/2x5/16 | 0 | 8 1/2 | A572-50 | 22 |
| | | 6 | | 3/4 Dia A325N | 0 | 2 | 1HD WASH | 4 |
| | | | | | | | | |
| | | | | FIELD BOLTS | | | | |
| | | 12 | | 3/4 Dia A325N | 0 | 2 1/4 | 1HD WASH | |
| | | | | | | | | |
| | | | | | | | | |
| | | | | | | | | |
| | | | | | | | | 1193 |

HOLES: 13/16" DIA U.N.O.
SURFACE PREP: SSPC-SP 2
FINISH: **PPG COATING 94-232**
ELECTRODES: E70XX-(LOW HYDROGEN)

GENERAL NOTES:

ALL DIMENSIONS FROM END OF MAIN MATERIAL U/N.
ALL VERTICAL SPACING OF HOLES TO BE 3" U/N.
ALL COPES TO HAVE 1/2" MINIMUM RADIUS.

CHARGES FOR CORRECTIVE WORK WILL NOT BE HONORED UNLESS PREVIOUS APPROVAL IS OBTAINED FROM JEFFORDS STEEL AND ENGINEERING COMPANY.

MEMBERS ARE TO BE ERECTED SO THAT MARKED END IS IN THE SAME LOCATION AS ON THE ERECTION DRAWING.

ON SHOP BOLTED CLIP ANGLES ON BEAMS: ON PIECE MARK END, INSERT SHOP BOLTS SO THE HEAD OF THE BOLT IS ON THE NEAR SIDE OF BEAM. ON THE NON-PIECE MARK END, INSERT BOLTS SO THE HEAD OF THE BOLT IS ON THE FAR SIDE OF BEAM.

REVISIONS

| rev# | date | description |
|---|---|---|
| | | |

| | |
|---|---|
| job no. | 4497 |
| date | Feb 21 201 |
| drawn by | TC |
| checked by | GDI |

PRINT RECORD

| | | |
|---|---|---|
| APP-1-6 | | |
| FAB 2-21 | | |

DRAWINGS PREPARED BY,
GLOBAL DETAILING, INC.
JOB # 11-390

customer
ENCOMPASS DEVELOP
DESIGN CONSTRUCTION

Jeffords
STEEL AND ENGINEERING COMPANY
P.O. BOX 40-4398 ROUTE #22
PLATTSBURGH,N.Y 12901
518-561-4061

project
AKWESASNE MOHAWK
CASINO
873 STATE HIGHWAY 37
AKWESASNE, NY

2B33

Global Detailing Inc

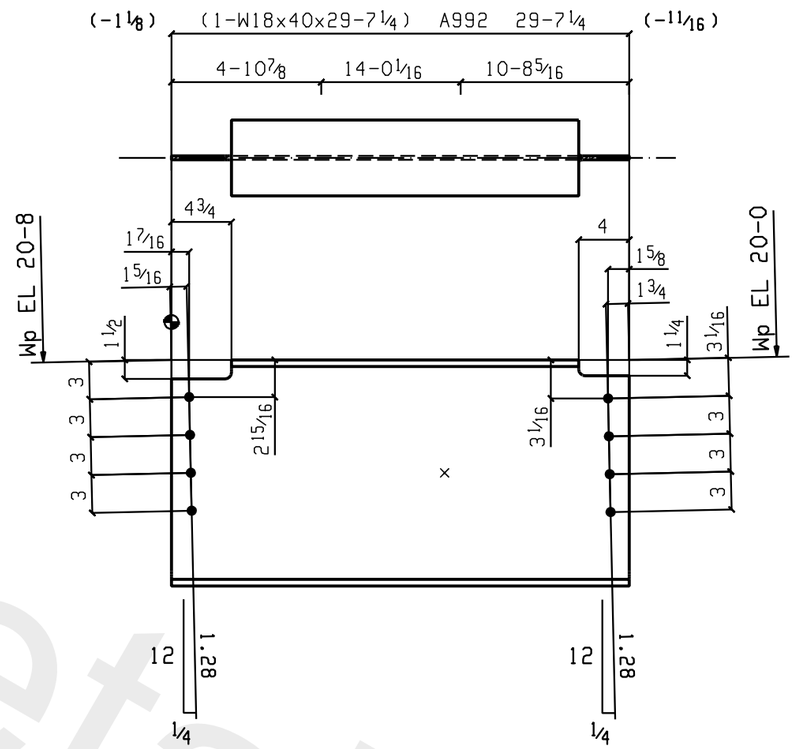


## 2 BEAMS 2B36

| | |
|---|---|
| W | 17 7/8 x 5/16 |
| F | 6 x 1/2 |
| K | 13/16 x 13/16 |

## BILL OF MATERIAL

| LIFT NO. | LIFT QTY. | NO. OF PIECES | PIECE MARK | MATERIAL | LENGTH FT. | LENGTH IN. | REMARKS | WEIGHT TOTAL |
|---|---|---|---|---|---|---|---|---|
| 2 | 2 | 2 | 2B36 | BEAM | | | | 2350 |
| | | 2 | 2B36 | W18x40 | 29 | 7 1/4 | A992 | 2350 |
| | | | | | | | | |
| | | | | FIELD BOLTS | | | | |
| | | 16 | | 3/4 Dia A325N | 0 | 1 3/4 | 1HD WASH | |
| | | | | | | | | |
| | | | | | | | | |
| | | | | | | | | |
| | | | | | | | | |
| | | | | | | | | |
| | | | | | | | | 2350 |

HOLES: 13/16" DIA U.N.O.
SURFACE PREP: SSPC-SP 2
FINISH: **PPG COATING 94-232**
ELECTRODES: E70XX-(LOW HYDROGEN)

GENERAL NOTES:

ALL DIMENSIONS FROM END OF MAIN MATERIAL U/N.
ALL VERTICAL SPACING OF HOLES TO BE 3" U/N.
ALL COPES TO HAVE 1/2" MINIMUM RADIUS.

CHARGES FOR CORRECTIVE WORK WILL NOT BE HONORED UNLESS PREVIOUS APPROVAL IS OBTAINED FROM JEFFORDS STEEL AND ENGINEERING COMPANY.

MEMBERS ARE TO BE ERECTED SO THAT MARKED END IS IN THE SAME LOCATION AS ON THE ERECTION DRAWING.

ON SHOP BOLTED CLIP ANGLES ON BEAMS: ON PIECE MARK END, INSERT SHOP BOLTS SO THE HEAD OF THE BOLT IS ON THE NEAR SIDE OF BEAM. ON THE NON-PIECE MARK END, INSERT BOLTS SO THE HEAD OF THE BOLT IS ON THE FAR SIDE OF BEAM.

REVISIONS

| rev# | date | description |
|---|---|---|
| | | |

| | |
|---|---|
| job no. | 4497 |
| date | Feb 21 201 |
| drawn by | TC |
| checked by | GDI |

PRINT RECORD

| | | |
|---|---|---|
| APP-1-6 | | |
| FAB 2-21 | | |

DRAWINGS PREPARED BY,
GLOBAL DETAILING, INC.
JOB # 11-390

customer
ENCOMPASS DEVELOP
DESIGN CONSTRUCTION

Jeffords
STEEL AND ENGINEERING COMPANY
P.O. BOX 40-4398 ROUTE #22
PLATTSBURGH,N.Y 12901
518-561-4061

project
AKWESASNE MOHAWK
CASINO
873 STATE HIGHWAY 37
AKWESASNE, NY

2B36

Global Detailing Inc

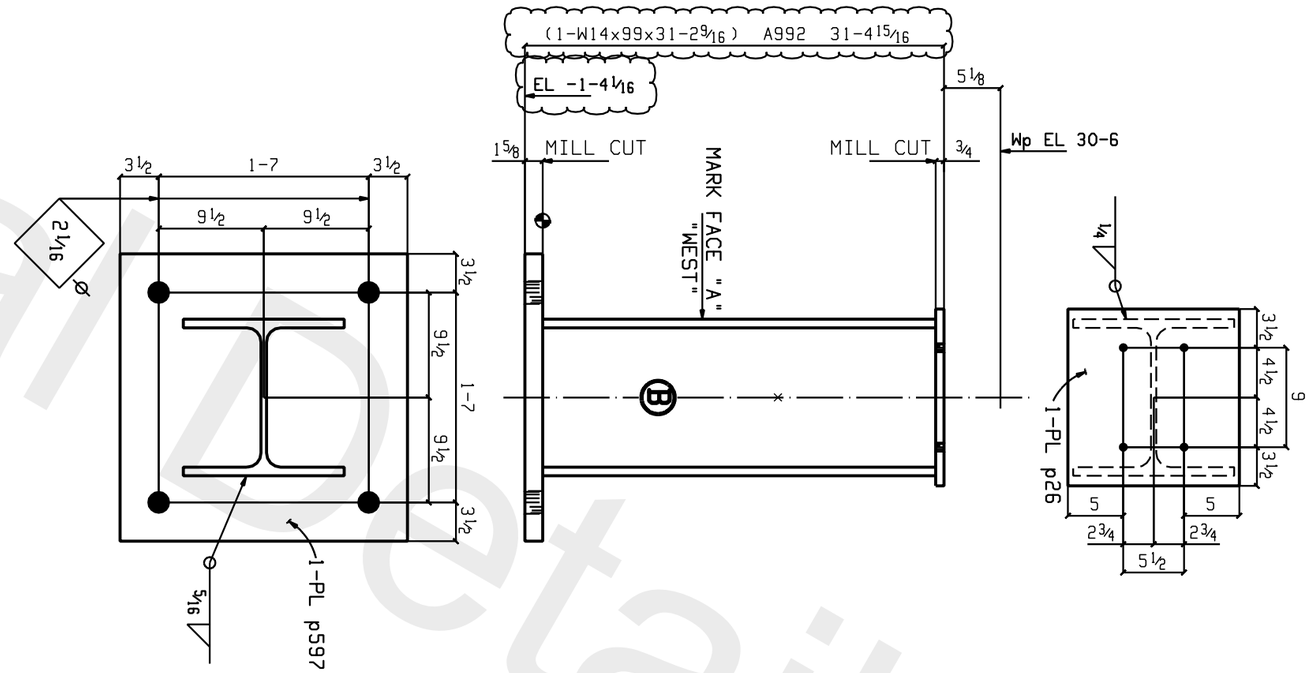


## ONE COLUMN 3C3

| | |
|---|---|
| W | 14 3/16 x 1/2 |
| F | 14 9/16 x 3/4 |
| K | 2 1/16 x 1 1/2 |

## BILL OF MATERIAL

| LIFT NO. | LIFT QTY. | NO. OF PIECES | PIECE MARK | MATERIAL | LENGTH FT. | LENGTH IN. | REMARKS | WEIGHT TOTAL |
|---|---|---|---|---|---|---|---|---|
| 3 | 1 | ONE | 3C3 | COLUMN | | | | 3448 |
| | | 1 | 3C3 | W14x99 | 31 | 2 9/16 | M2E A992 | 3090 |
| | | 1 | p597 | PL1 5/8x26 | 2 | 2 | A572-42 | 305 |
| | | 1 | p26 | PL3/4x15 1/2 | 1 | 4 | A572-50 | 52 |
| | | | | | | | | |
| | | | | | | | | |
| | | | | | | | | |
| | | | | | | | | |
| | | | | | | | | 3448 |

HOLES: 13/16" DIA U.N.O.
SURFACE PREP: SSPC-SP 2
FINISH: **PPG COATING 94-232**
ELECTRODES: E70XX-(LOW HYDROGEN)

GENERAL NOTES:

ALL DIMENSIONS FROM END OF MAIN MATERIAL U/N.
ALL VERTICAL SPACING OF HOLES TO BE 3" U/N.
ALL COPES TO HAVE 1/2" MINIMUM RADIUS.

CHARGES FOR CORRECTIVE WORK WILL NOT BE HONORED UNLESS PREVIOUS APPROVAL IS OBTAINED FROM JEFFORDS STEEL AND ENGINEERING COMPANY.

MEMBERS ARE TO BE ERECTED SO THAT MARKED END IS IN THE SAME LOCATION AS ON THE ERECTION DRAWING.

ON SHOP BOLTED CLIP ANGLES ON BEAMS: ON PIECE MARK END, INSERT SHOP BOLTS SO THE HEAD OF THE BOLT IS ON THE NEAR SIDE OF BEAM. ON THE NON-PIECE MARK END, INSERT BOLTS SO THE HEAD OF THE BOLT IS ON THE FAR SIDE OF BEAM.

REVISIONS

| rev# | date | description |
|---|---|---|
| 1 | 2-21-12 | SHORTEN COLUMN BY 6" |

job no. 4497
date Feb 21 201
drawn by TC
checked by GDI

PRINT RECORD

| | | |
|---|---|---|
| APP-1-6 | | |
| FAB 2-14 | | |
| FAB 2-21 | | |

DRAWINGS PREPARED BY,
GLOBAL DETAILING, INC.
JOB # 11-390

customer
ENCOMPASS DEVELOP
DESIGN CONSTRUCTION

Jeffords
STEEL AND ENGINEERING COMPANY
P.O. BOX 40-4398 ROUTE #22
PLATTSBURGH,N.Y 12901
518-561-4061

project
AKWESASNE MOHAWK
CASINO
873 STATE HIGHWAY 37
AKWESASNE, NY

3C3

Global Detailing Inc