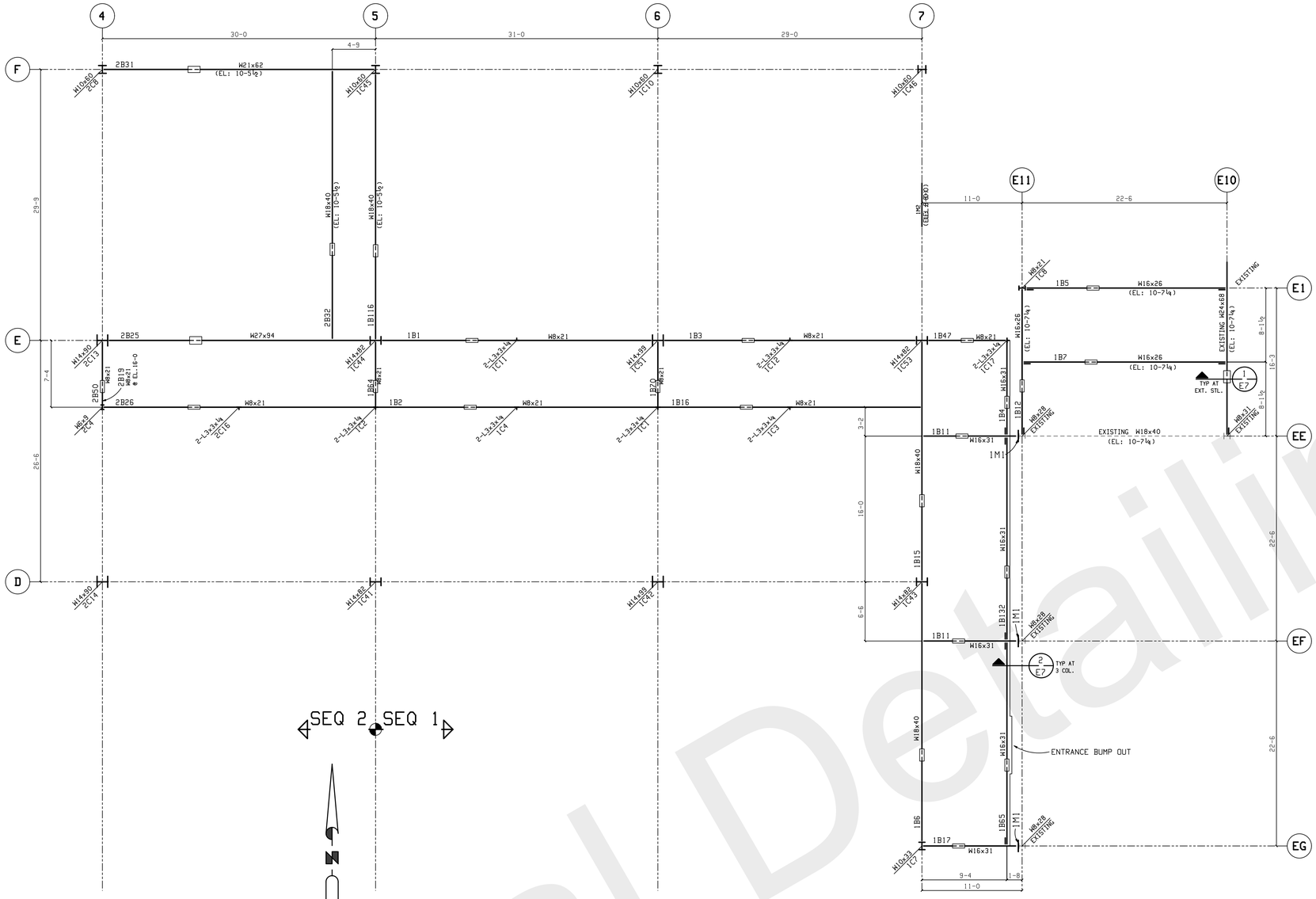

SEQ 2 SEQ 1

WALKWAY FRAMING PLAN

1) T.O. STEEL AT ELEVATION: 10-5½ U.N.

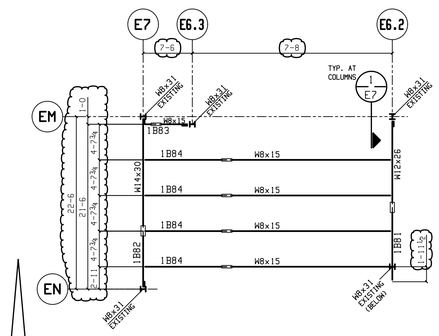

EXISTING RESTAURANT ROOF

1) T.O. STEEL ELEVATION: 15-7
2) MATERIAL IS IN SEQUENCE 1

NOTE: AREA 'ON HOLD'
PENDING ARCHITECT DETAILS
PER APPROVAL MARK UPS
DATED JAN.9, 2012

ALL VERIFIES, REQUEST FOR INFORMATION NOT RESPONDED TO AND/OR DIMENSIONS NOT FURNISHED WILL PLACE AFFECTED STEEL ON HOLD.

JEFFORDS STEEL AND ENGINEERING ASSUMES NO RESPONSIBILITY FOR ERRORS RESULTING FROM CONFLICTS IN CONTRACT DRAWINGS (ARCHITECTURAL/ STRUCTURAL).

GENERAL NOTES:

CHARGES FOR CORRECTIVE WORK WILL NOT BE HONORED UNLESS PREVIOUS APPROVAL IS OBTAINED FROM JEFFORDS STEEL AND ENGINNERING COMPANY.

MEMBERS ARE TO BE ERECTED SO THAT MARKED END IS IN THE SAME LOCATION AS ON THE ERECTION DRAWING.

ERECTION NORTH

print record			
1	APP	12-4	
1	APP	1-6	
1	FIELD	2-16	

job no. 4497
date 1-4-12
drawn by MC
checked by - GB

revisions	
rev#	date	description

Jeffords
STEEL AND ENGINEERING COMPANY
P.O. BOX 40-439 ROUTE 122
PLATTSBURGH, N.Y. 12901
518-561-4061

customer
ENCOMPASS DEVELOP
DESIGN CONSTRUCTION

project
AKWESASNE MOHAWK CASINO
873 STATE HIGHWAY 37
AKWESASNE, NY

sheet
E1

Global Detailing, Inc

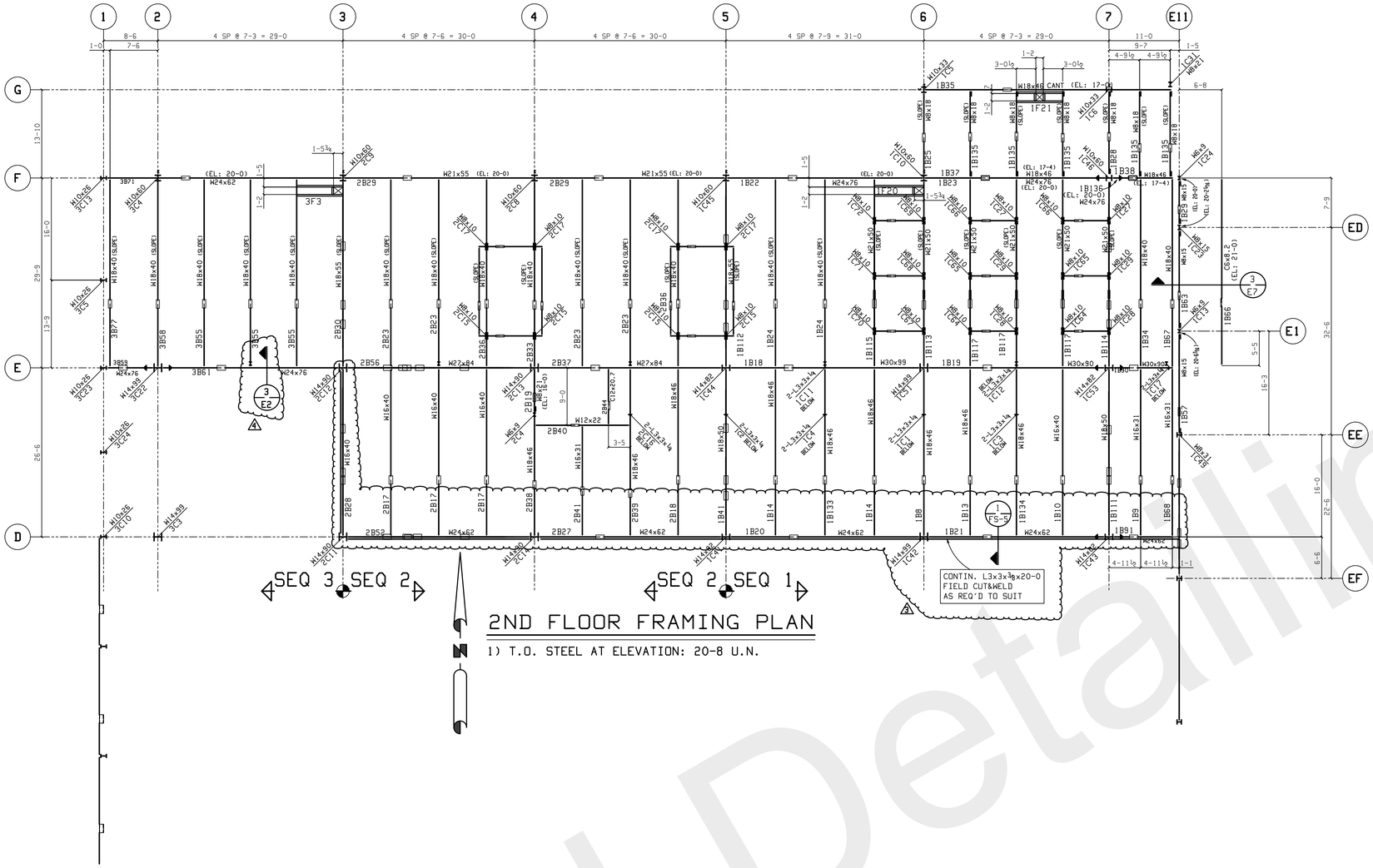

2ND FLOOR FRAMING PLAN

1) T.O. STEEL AT ELEVATION: 20-8 U.N.

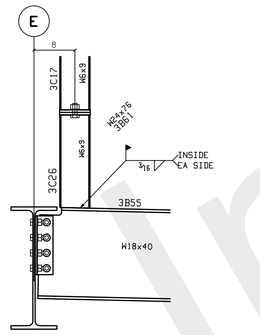

SECTION

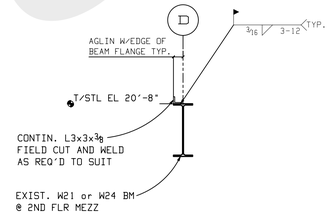

SECTION FIELD WELD DET.

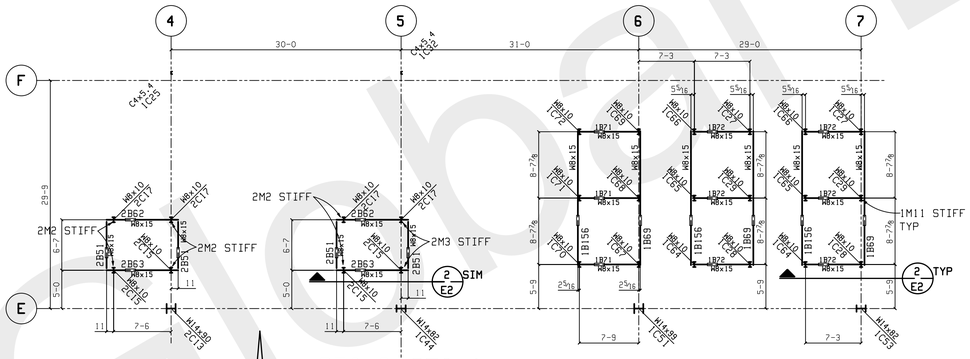

MECHANICAL PLATFORMS

1) T.O. STEEL AT ELEVATION: 23-4 U.N.

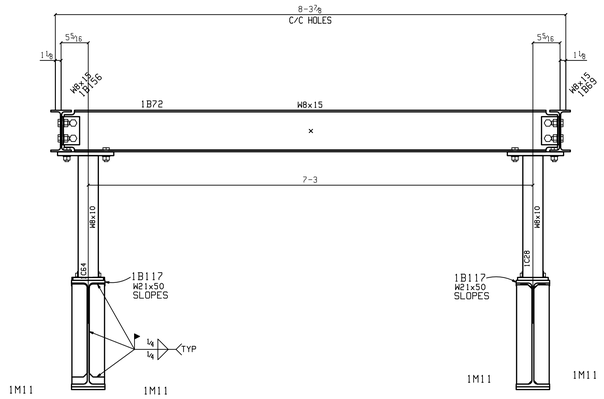

SECTION

ALL VERIFIES, REQUEST FOR INFORMATION NOT RESPONDED TO AND/OR DIMENSIONS NOT FURNISHED WILL PLACE AFFECTED STEEL ON HOLD.

JEFFORDS STEEL AND ENGINEERING ASSUMES NO RESPONSIBILITY FOR ERRORS RESULTING FROM CONFLICTS IN CONTRACT DRAWINGS (ARCHITECTURAL/STRUCTURAL).

GENERAL NOTES:

CHARGES FOR CORRECTIVE WORK WILL NOT BE HONORED UNLESS PREVIOUS APPROVAL IS OBTAINED FROM JEFFORDS STEEL AND ENGINNERING COMPANY.

MEMBERS ARE TO BE ERECTED SO THAT MARKED END IS IN THE SAME LOCATION AS ON THE ERECTION DRAWING.

ERECTION NORTH

print record

1	APP	1-5	
1	APP	1-6	
1	FIELD REVISE	2-16	

job no. 4497
date 1-4-12
drawn by MC
checked by - GB

revisions

rev#	date	description
1	3-5-12	ADDED ROOF FRAMES
2	3-19-12	FIX MECH FRAMES
3	3-22-12	ADDED L3x3x3/8@2ND FLR MEZZ ALONG COL LN. D
4	4-16-12	ADDED STUB WIND COLUMN

STEEL AND ENGINEERING COMPANY
P.O. BOX 40-338 ROUTE 422
PLATTSBURGH, N.Y. 12901
518-561-4061

customer
ENCOMPASS DEVELOP
DESIGN CONSTRUCTION

project
AKWESASNE MOHAWK CASINO
873 STATE HIGHWAY 37
AKWESASNE, NY

sheet
E2

Global Detailing, Inc

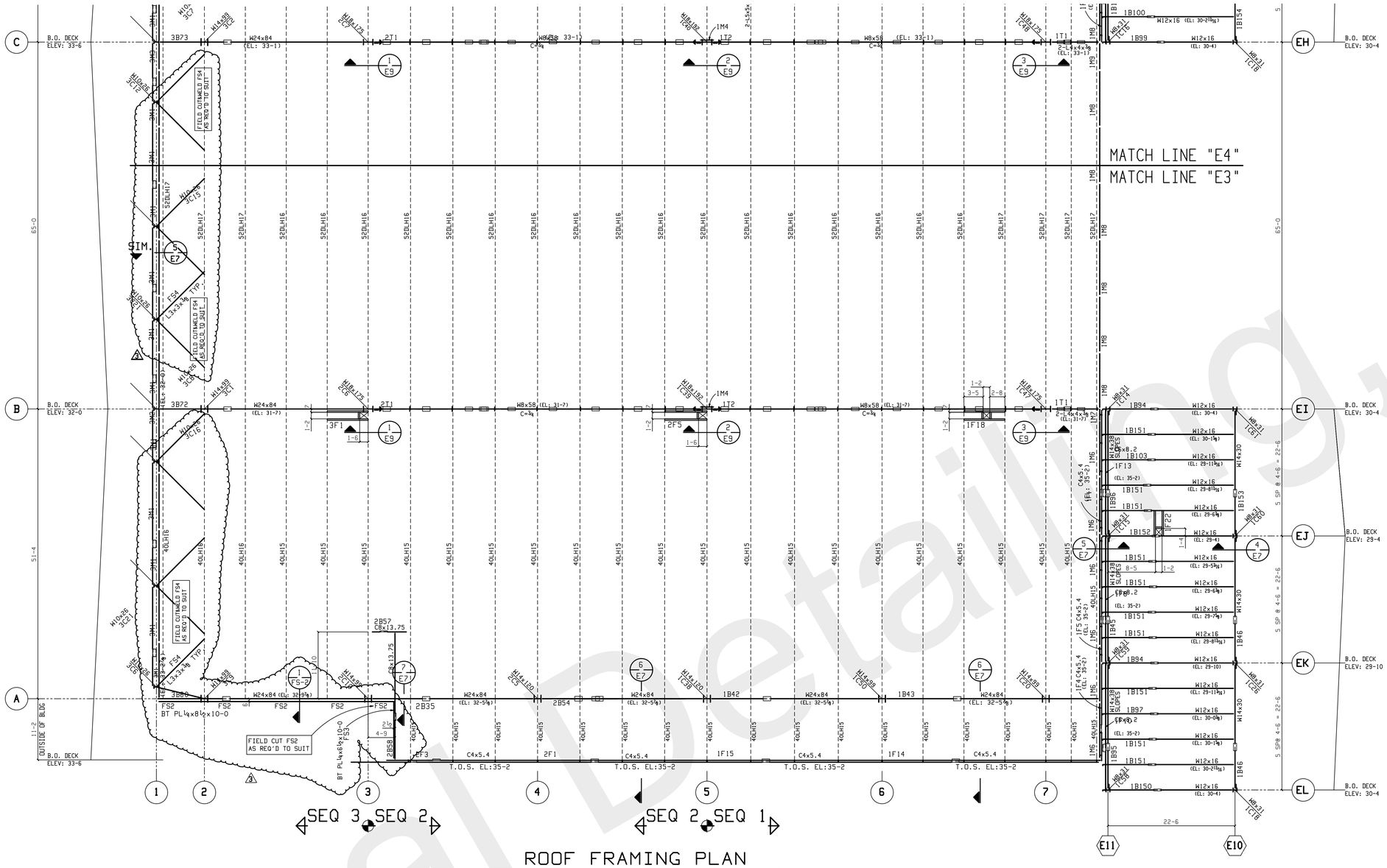

ROOF FRAMING PLAN

1) SEE PLANS FOR ELEVATION OF STEEL
2) "C" = DENOTES CAMBER

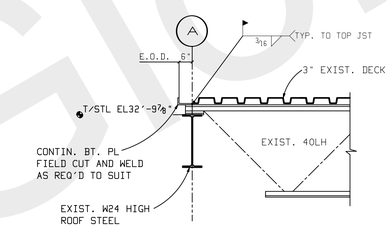

1/FS-2 SECTION FIELD WELD DET.

NOTE:
ALL CLOUDED DIMENSIONS, ELEVATIONS, & NOTES NEED TO BE VERIFIED PRIOR TO FABRICATION CAN BEGIN.

ALL VERIFIES, REQUEST FOR INFORMATION NOT RESPONDED TO AND/OR DIMENSIONS NOT FURNISHED WILL PLACE AFFECTED STEEL ON HOLD.

JEFFORDS STEEL AND ENGINEERING ASSUMES NO RESPONSIBILITY FOR ERRORS RESULTING FROM CONFLICTS IN CONTRACT DRAWINGS (ARCHITECTURAL/STRUCTURAL).

GENERAL NOTES:

CHARGES FOR CORRECTIVE WORK WILL NOT BE HONORED UNLESS PREVIOUS APPROVAL IS OBTAINED FROM JEFFORDS STEEL AND ENGINNERING COMPANY.

MEMBERS ARE TO BE ERECTED SO THAT MARKED END IS IN THE SAME LOCATION AS ON THE ERECTION DRAWING.

print record			
1	APP	12-4	
1	APP	1-6	

job no. 4487
date 1-4-12
drawn by MC
checked by -

revisions

rev#	date	description
1	2-20-12	SHOW ROOF SLOPES
2	3-5-12	ADDED ROOF FRAMES
3	3-22-12	ADDED BT PL-S FOR BRACKL'S FOR WIND COLLASST

STEEL AND ENGINEERING COMPANY
P.O. BOX 40-339 ROUTE 422
PLATTSBURGH, N.Y. 12901
518-561-4061

customer
ENCOMPASS DEVELOP
DESIGN CONSTRUCTION

project
AKWESASNE MOHAWK CASINO
873 STATE HIGHWAY 37
AKWESASNE, NY

sheet
E3

Global Detailing, Inc

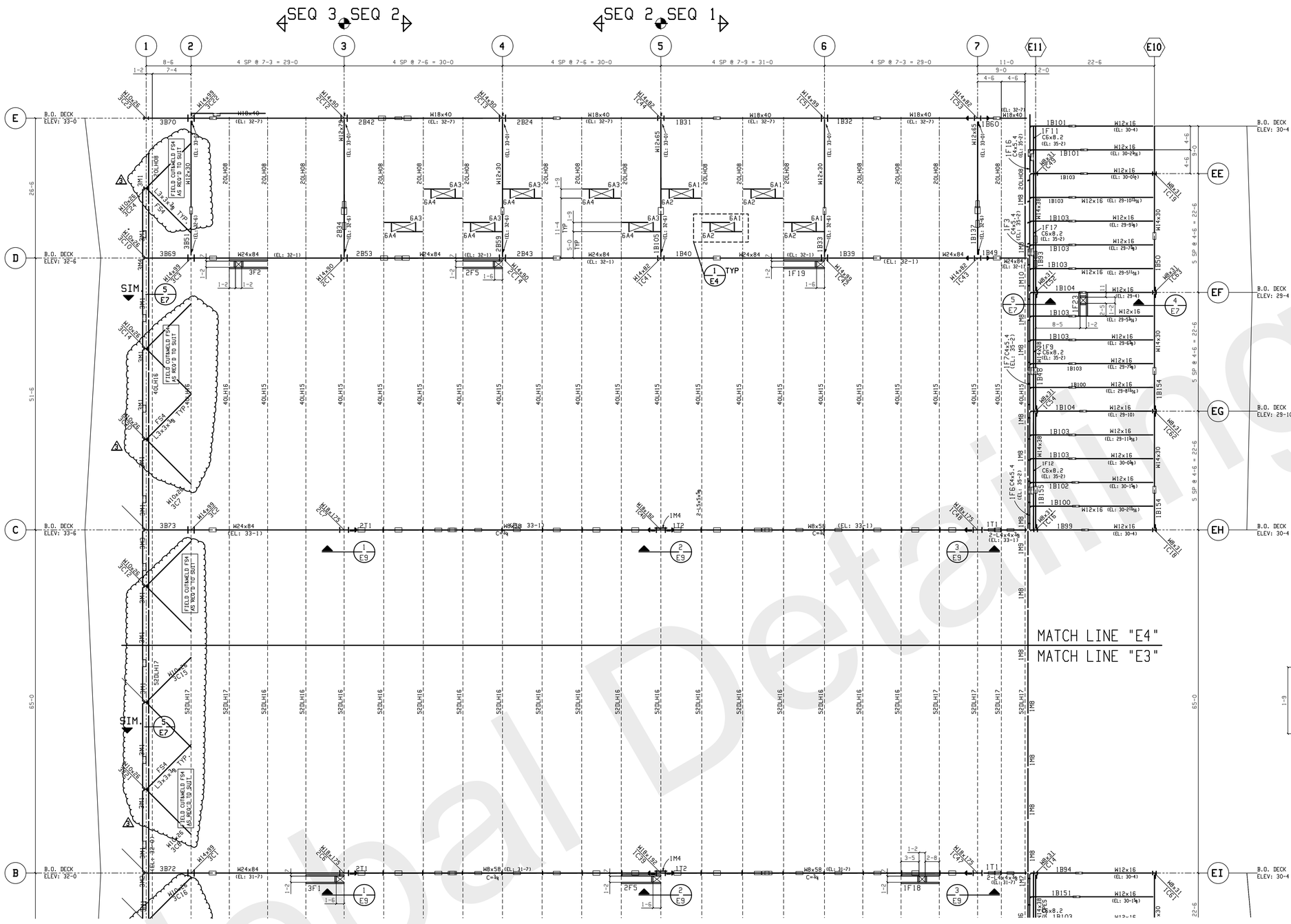

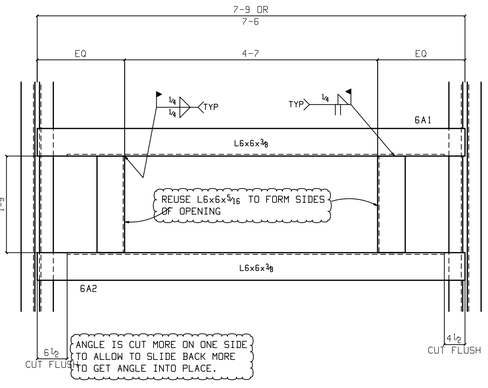

1/E4 SECTION

ALL VERIFIES, REQUEST FOR INFORMATION NOT RESPONDED TO AND/OR DIMENSIONS NOT FURNISHED WILL PLACE AFFECTED STEEL ON HOLD.

JEFFORDS STEEL AND ENGINEERING ASSUMES NO RESPONSIBILITY FOR ERRORS RESULTING FROM CONFLICTS IN CONTRACT DRAWINGS (ARCHITECTURAL/STRUCTURAL).

GENERAL NOTES:

CHARGES FOR CORRECTIVE WORK WILL NOT BE HONORED UNLESS PREVIOUS APPROVAL IS OBTAINED FROM JEFFORDS STEEL AND ENGINNERING COMPANY.

MEMBERS ARE TO BE ERECTED SO THAT MARKED END IS IN THE SAME LOCATION AS ON THE ERECTION DRAWING.

print record			
1	APP	12-4	
1	APP	1-6	
1	F.D	4-12	

job no. 4487
date 1-4-12
drawn by MC
checked by -

revisions

rev#	date	description
1	2-20-12	SHOW ROOF SLOPES
2	3-5-12	ADDED ROOF FRAMES
3	3-22-12	ADDED BY PL'S FOR DECK'L'S FOR WIND CDLs1ST
4	3-28-12	ADDED ROOF FRAMES & SECTION

STEEL AND ENGINEERING COMPANY
P.O. BOX 40-439 ROUTE 422
PLATTSBURGH, N.Y. 12901
518-561-4061

customer
ENCOMPASS DEVELOP
DESIGN CONSTRUCTION

project
AKWESASNE MOHAWK CASINO
873 STATE HIGHWAY 37
AKWESASNE, NY

sheet
E4

Global Detailing, Inc

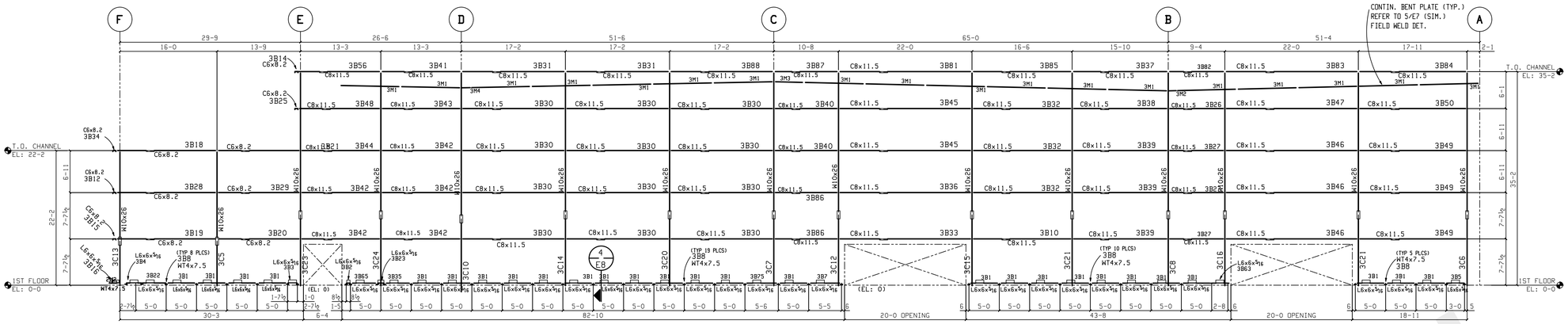

GIRT FRAMING @ COLUMNLINE 1

(LOOKING EAST)

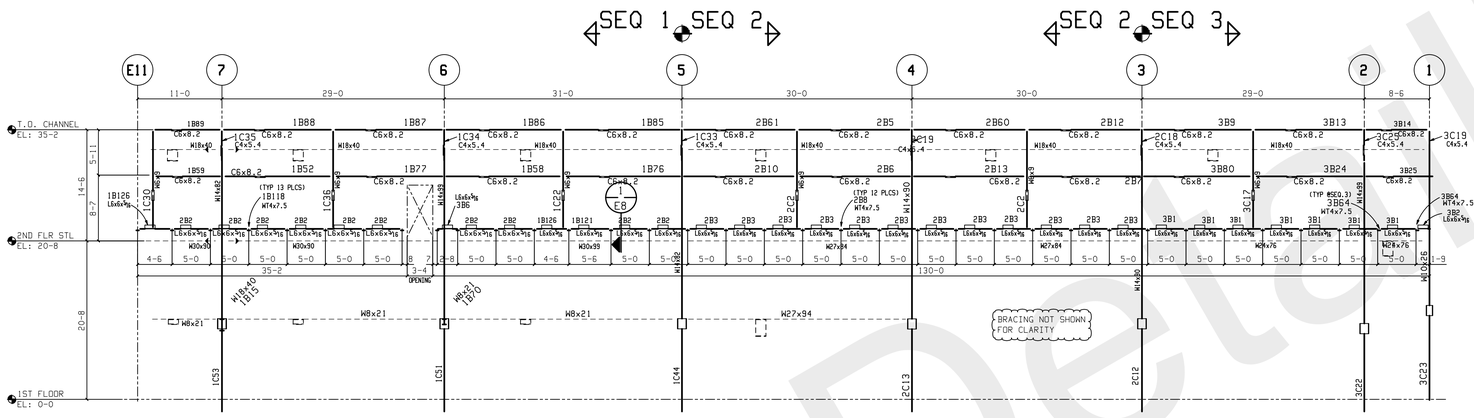

GIRT FRAMING @ COLUMNLINE E

(LOOKING SOUTH)

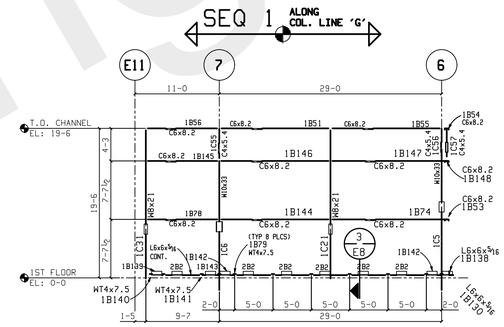

GIRT FRAMING @ COLUMNLINE G

(LOOKING SOUTH)

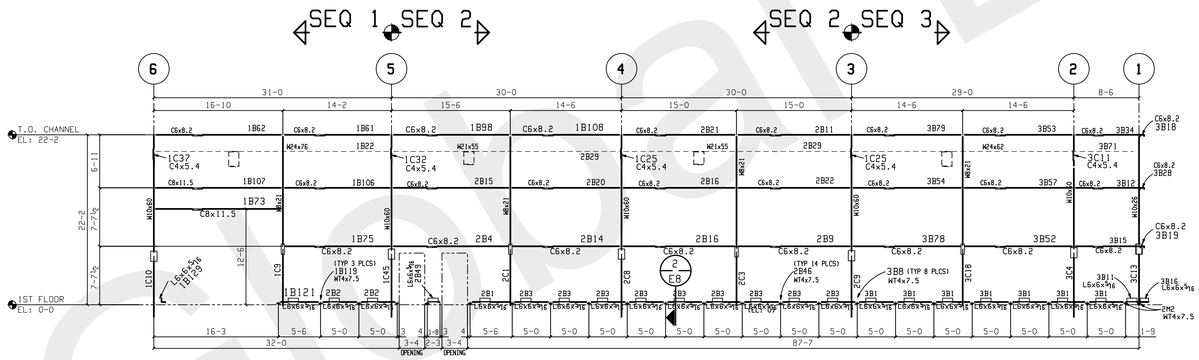

GIRT FRAMING @ COLUMNLINE F

(LOOKING SOUTH)

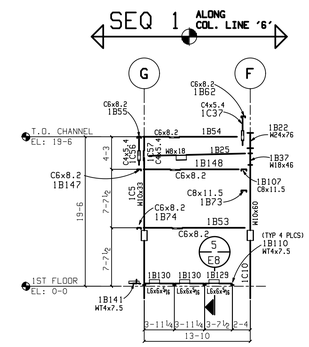

GIRT FRAMING @ COLUMNLINE 6

(LOOKING EAST)

ALL VERIFIES, REQUEST FOR INFORMATION NOT RESPONDED TO AND/OR DIMENSIONS NOT FURNISHED WILL PLACE AFFECTED STEEL ON HOLD.

JEFFORDS STEEL AND ENGINEERING ASSUMES NO RESPONSIBILITY FOR ERRORS RESULTING FROM CONFLICTS IN CONTRACT DRAWINGS (ARCHITECTURAL/STRUCTURAL).

GENERAL NOTES:

CHARGES FOR CORRECTIVE WORK WILL NOT BE HONORED UNLESS PREVIOUS APPROVAL IS OBTAINED FROM JEFFORDS STEEL AND ENGINNERING COMPANY.

MEMBERS ARE TO BE ERECTED SO THAT MARKED END IS IN THE SAME LOCATION AS ON THE ERECTION DRAWING.

ERECTION NORTH

print record			
1	APP	12-4	
1	APP	1-6	
1	FIELD	2-16	

job no. 4497
date 1-4-12
drawn by MC
checked by - GBI

revisions	
rev#	date	description

Jeffords
STEEL AND ENGINEERING COMPANY
P.O. BOX 40-398 ROUTE 422
PLATTSBURGH, N.Y. 12901
518-561-4061

customer
ENCOMPASS DEVELOP
DESIGN CONSTRUCTION

project
AKWESASNE MOHAWK CASINO
873 STATE HIGHWAY 37
AKWESASNE, NY

sheet
E5

Global Detailing, Inc

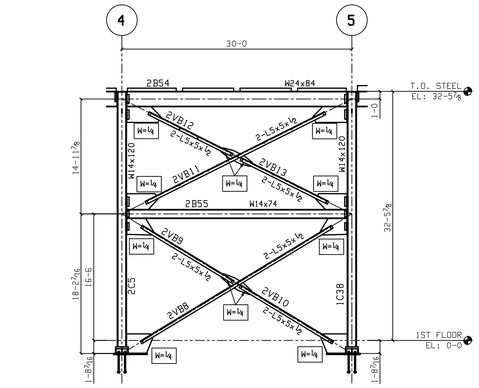

VERTICAL BRACE @ COLUMNLINE A

(LOOKING NORTH) (REF: 2/S30-01-02)

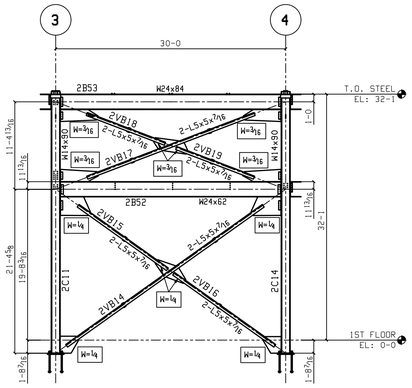

VERTICAL BRACE @ COLUMNLINE D

(LOOKING NORTH) (REF: 2/S30-01-03)

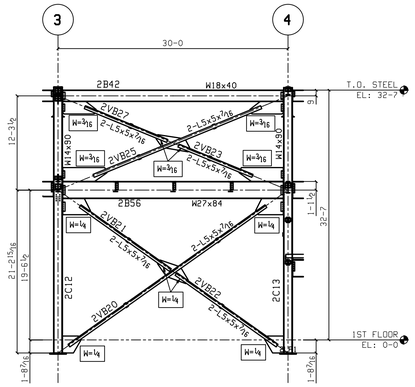

VERTICAL BRACE @ COLUMNLINE E

(LOOKING NORTH) (REF: 2/S30-01-03)

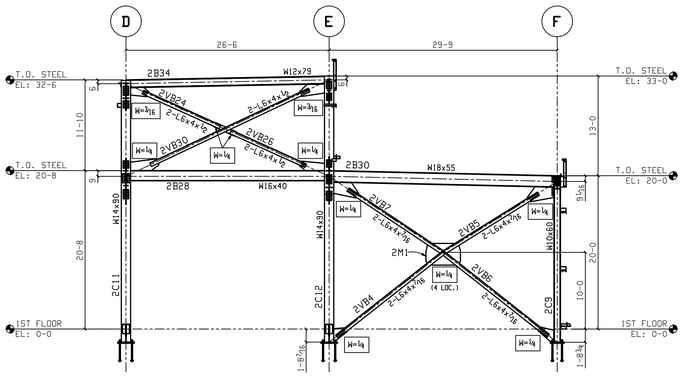

VERTICAL BRACE @ COLUMNLINE 3

(LOOKING WEST) (REF: 1 & 2/S30-01-04)

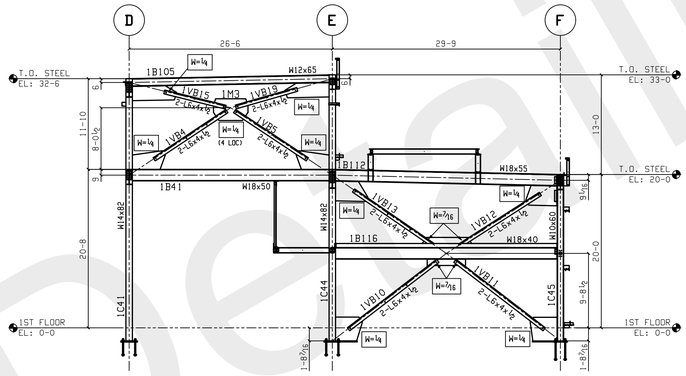

VERTICAL BRACE @ COLUMNLINE 5

(LOOKING WEST) (REF: 1/S30-01-04)

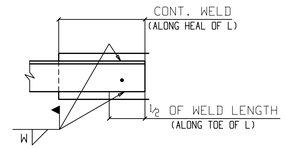

TYPICAL WELD CONNECTION AT BRACE ANGLE TO GUSSET PLATE

NOTE: W = WELD SIZE
(SEE BRACING ELEVATIONS)

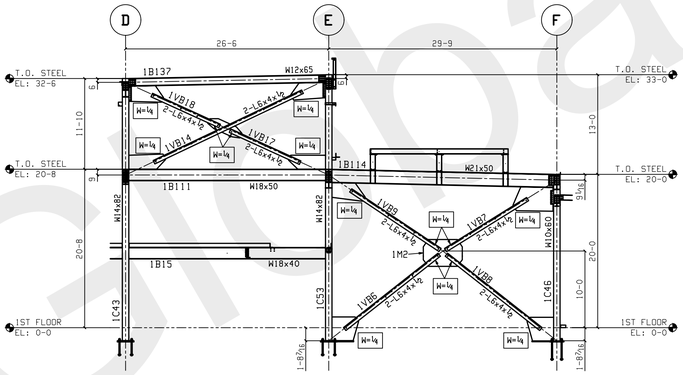

VERTICAL BRACE @ COLUMNLINE 7

(LOOKING WEST) (REF: 1/S30-01-04)

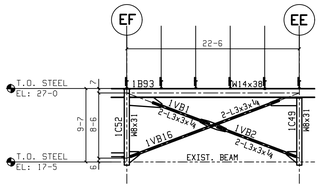

VERTICAL BRACE @ COLUMNLINE E11

(LOOKING WEST) (REF: 3/S30-01-04)

THIS BRACE FRAME HAS ALL BOLTED CONNECTIONS

ALL VERIFIES, REQUEST FOR INFORMATION NOT RESPONDED TO AND/OR DIMENSIONS NOT FURNISHED WILL PLACE AFFECTED STEEL ON HOLD.

JEFFORDS STEEL AND ENGINEERING ASSUMES NO RESPONSIBILITY FOR ERRORS RESULTING FROM CONFLICTS IN CONTRACT DRAWINGS (ARCHITECTURAL/STRUCTURAL).

GENERAL NOTES:

CHARGES FOR CORRECTIVE WORK WILL NOT BE HONORED UNLESS PREVIOUS APPROVAL IS OBTAINED FROM JEFFORDS STEEL AND ENGINNERING COMPANY.

MEMBERS ARE TO BE ERECTED SO THAT MARKED END IS IN THE SAME LOCATION AS ON THE ERECTION DRAWING.

ERECTION NORTH

print record			
1	APP	12-4	
1	APP	1-6	
1	FIELD	2-16	

job no. 4497
date 1-4-12
drawn by MC
checked by - GM

revisions		
rev#	date	description
1	3.6.12	ADDED TYPICAL WELD DETAIL & SIZES

Jeffords
STEEL AND ENGINEERING COMPANY
P.O. BOX 40-398 ROUTE 422
PLATTSBURGH, N.Y. 12901
518-561-4061

customer
ENCOMPASS DEVELOP
DESIGN CONSTRUCTION

project
AKWESASNE MOHAWK CASINO
873 STATE HIGHWAY 37
AKWESASNE, NY

sheet
E6

Global Detailing, Inc

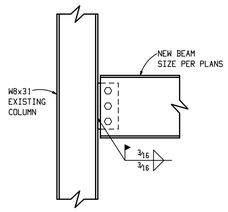

1 E7 SECTION

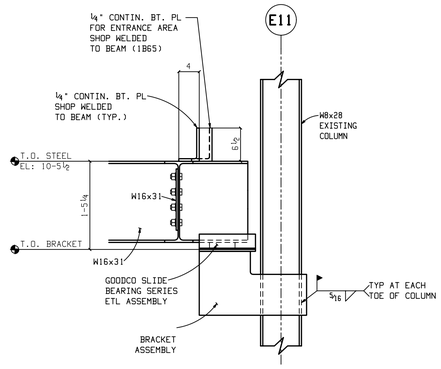

2 E7 SECTION
(REF: 1/SS0-01-01)

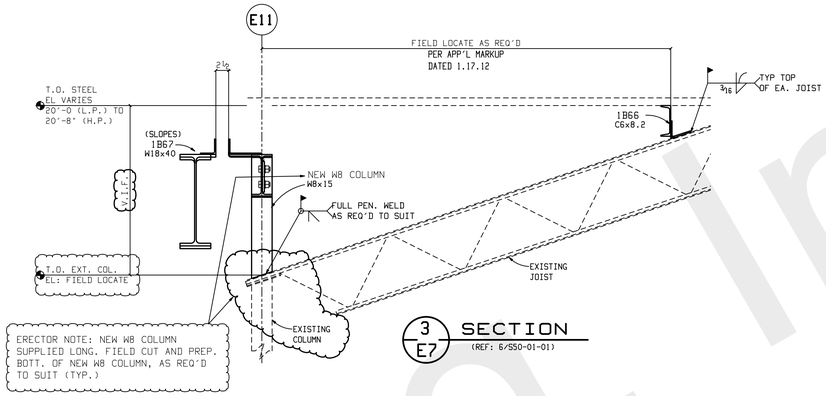

3 E7 SECTION
(REF: 6/SS0-01-01)

ERECTION NORTH

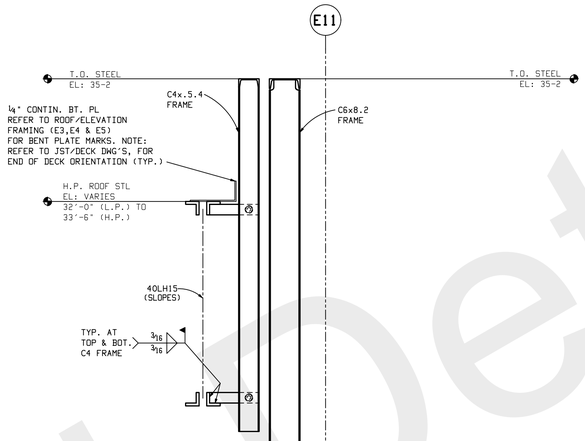

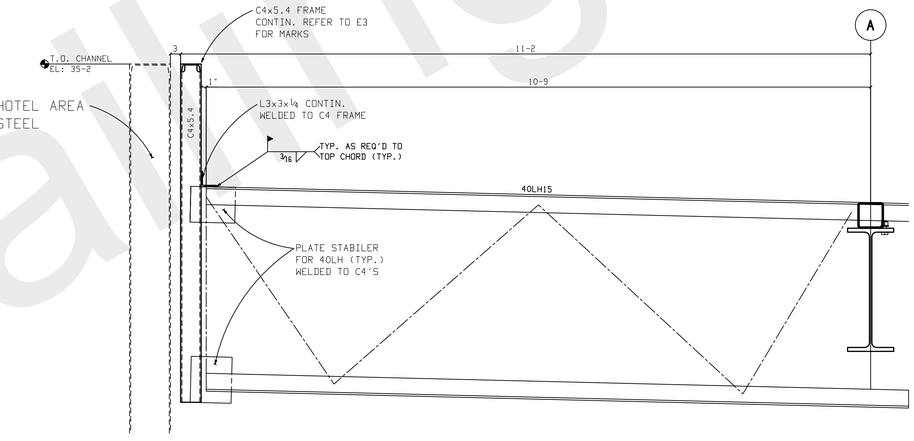

6 E7 SECTION

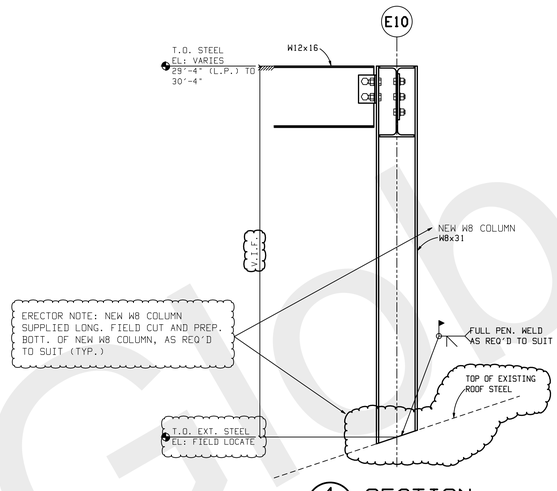

4 E7 SECTION
(REF: 9/SS0-01-01)

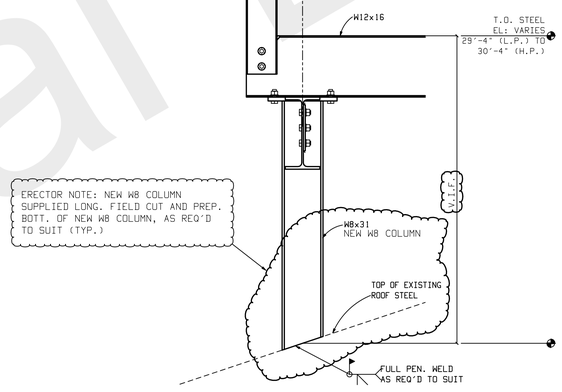

5 E7 SECTION
(REF: 8/SS0-01-01)

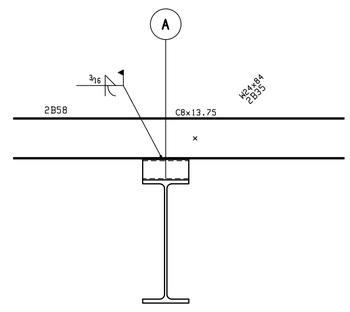

7 E7 SECTION
(REF: E3)

ALL VERIFIES, REQUEST FOR INFORMATION NOT RESPONDED TO AND/OR DIMENSIONS NOT FURNISHED WILL PLACE AFFECTED STEEL ON HOLD.

JEFFORDS STEEL AND ENGINEERING ASSUMES NO RESPONSIBILITY FOR ERRORS RESULTING FROM CONFLICTS IN CONTRACT DRAWINGS (ARCHITECTURAL/STRUCTURAL).

GENERAL NOTES:

CHARGES FOR CORRECTIVE WORK WILL NOT BE HONORED UNLESS PREVIOUS APPROVAL IS OBTAINED FROM JEFFORDS STEEL AND ENGINNERING COMPANY.

MEMBERS ARE TO BE ERECTED SO THAT MARKED END IS IN THE SAME LOCATION AS ON THE ERECTION DRAWING.

print record			
1	APP	12-4	
1	APP	1-6	
1	FIELD	2-16	

job no. 4497
date 1-4-12
drawn by MC
checked by- GDI

revisions	
rev#	date	description

Jeffords
STEEL AND ENGINEERING COMPANY
P.O. BOX 40-398 ROUTE 822
PLATTSBURGH, N.Y. 12901
518-561-4061

customer
ENCOMPASS DEVELOP
DESIGN CONSTRUCTION

project
AKWESASNE MOHAWK CASINO
873 STATE HIGHWAY 37
AKWESASNE, NY

sheet
E7

Global Detailing, Inc

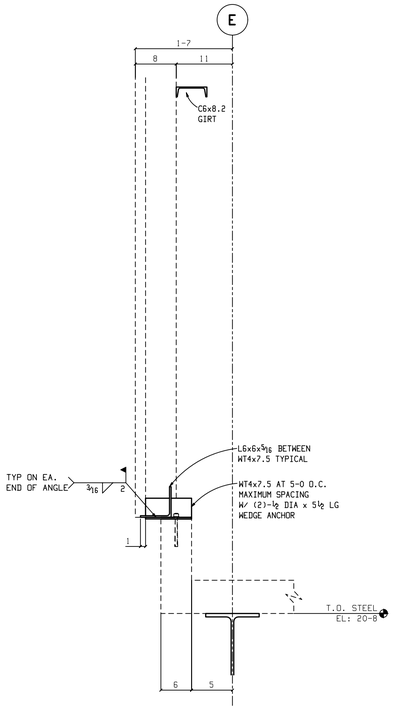

1 / E8 SECTION
(REF: 3/A50-00-01)

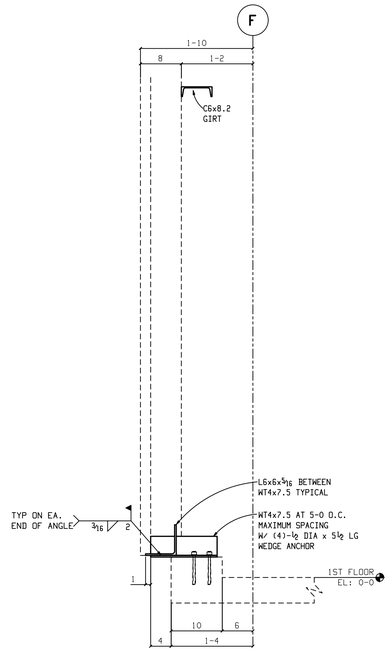

2 / E8 SECTION
REF: 3&4/S50-01-02
5&6/A50-00-01

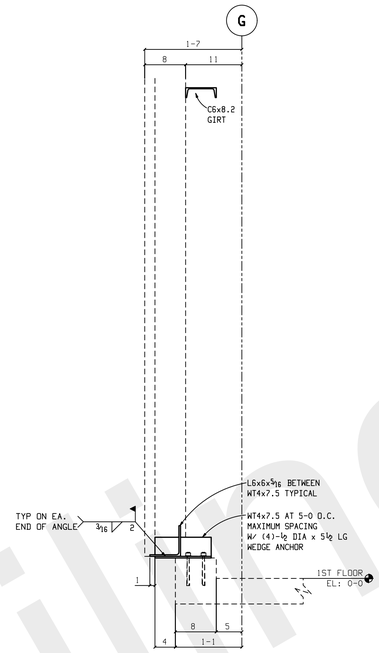

3 / E8 SECTION

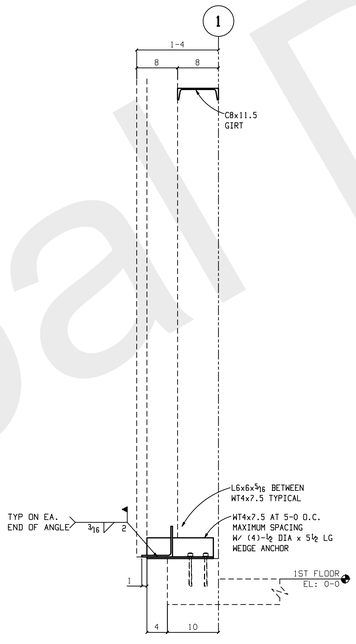

4 / E8 SECTION

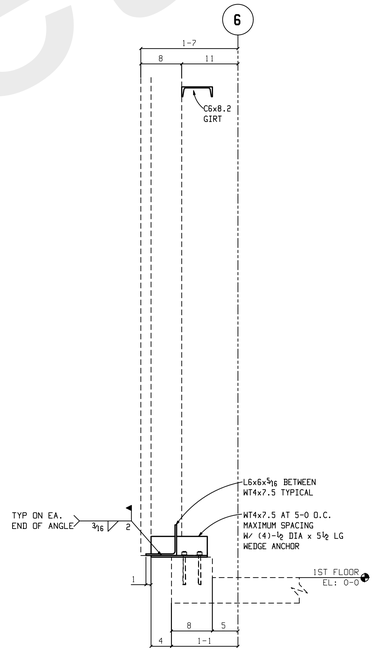

5 / E8 SECTION

ALL VERIFIES, REQUEST FOR INFORMATION NOT RESPONDED TO AND/OR DIMENSIONS NOT FURNISHED WILL PLACE AFFECTED STEEL ON HOLD.

JEFFORDS STEEL AND ENGINEERING ASSUMES NO RESPONSIBILITY FOR ERRORS RESULTING FROM CONFLICTS IN CONTRACT DRAWINGS (ARCHITECTURAL/STRUCTURAL).

GENERAL NOTES:

CHARGES FOR CORRECTIVE WORK WILL NOT BE HONORED UNLESS PREVIOUS APPROVAL IS OBTAINED FROM JEFFORDS STEEL AND ENGINNERING COMPANY.

MEMBERS ARE TO BE ERECTED SO THAT MARKED END IS IN THE SAME LOCATION AS ON THE ERECTION DRAWING.

ERECTION NORTH

print record			
1	APP	12-4	
1	APP	1-6	
1	FIELD	2-16	

job no. 4487
date 1-4-12
drawn by MC
checked by - GBI

revisions		
rev#	date	description

STEEL AND ENGINEERING COMPANY
P.O. BOX 40-338 ROUTE 422
PLATTSBURGH, N.Y. 12901
518-561-4061

customer
ENCOMPASS DEVELOP
DESIGN CONSTRUCTION

project
AKWESASNE MOHAWK CASINO
873 STATE HIGHWAY 37
AKWESASNE, NY

sheet
E8

Global Detailing, Inc

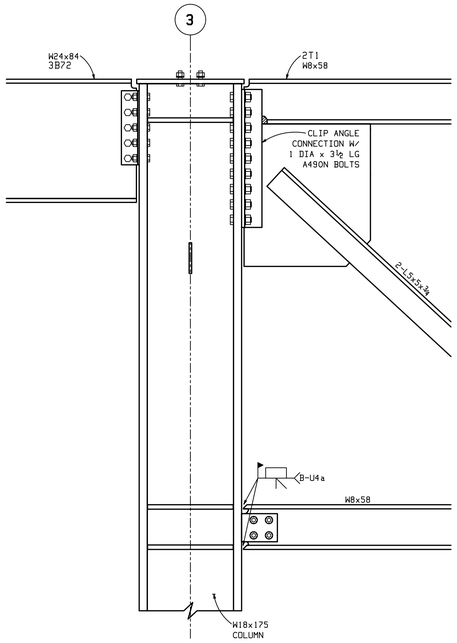

1/E9 SECTION

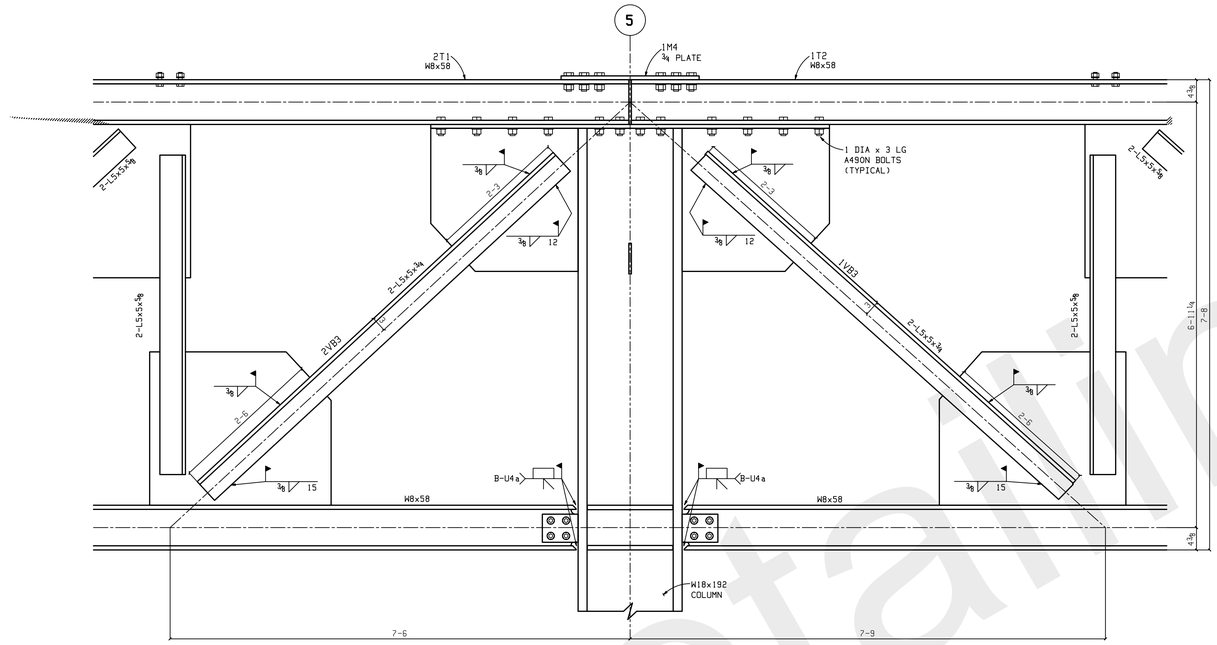

2/E9 SECTION

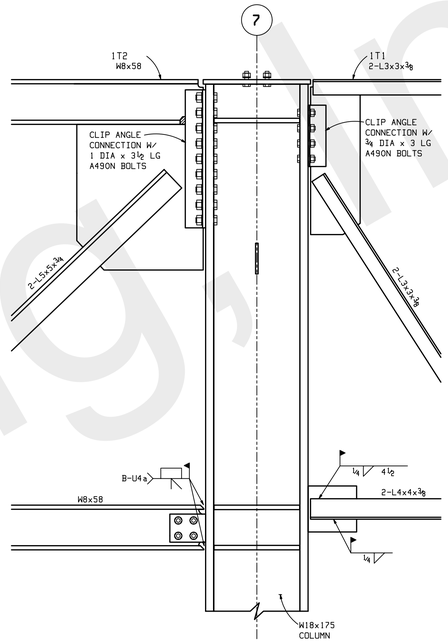

3/E9 SECTION

ALL VERIFIES, REQUEST FOR INFORMATION NOT RESPONDED TO AND/OR DIMENSIONS NOT FURNISHED WILL PLACE AFFECTED STEEL ON HOLD.

JEFFORDS STEEL AND ENGINEERING ASSUMES NO RESPONSIBILITY FOR ERRORS RESULTING FROM CONFLICTS IN CONTRACT DRAWINGS (ARCHITECTURAL/STRUCTURAL).

GENERAL NOTES:

CHARGES FOR CORRECTIVE WORK WILL NOT BE HONORED UNLESS PREVIOUS APPROVAL IS OBTAINED FROM JEFFORDS STEEL AND ENGINNERING COMPANY.

MEMBERS ARE TO BE ERECTED SO THAT MARKED END IS IN THE SAME LOCATION AS ON THE ERECTION DRAWING.

ERECTION NORTH

print record			
1	APP	12-4	
1	APP	1-6	
1	FIELD	2-16	

job no. 4487
date 1-4-12
drawn by MC
checked by - GB

revisions	
rev#	date	description

STEEL AND ENGINEERING COMPANY
P.O. BOX 40-4398 ROUTE 422
PLATTSBURGH, N.Y. 12901
518-561-4061

customer
ENCOMPASS DEVELOP
DESIGN CONSTRUCTION

project
AKWESASNE MOHAWK CASINO
873 STATE HIGHWAY 37
AKWESASNE, NY

sheet
E9

Global Detailing, Inc

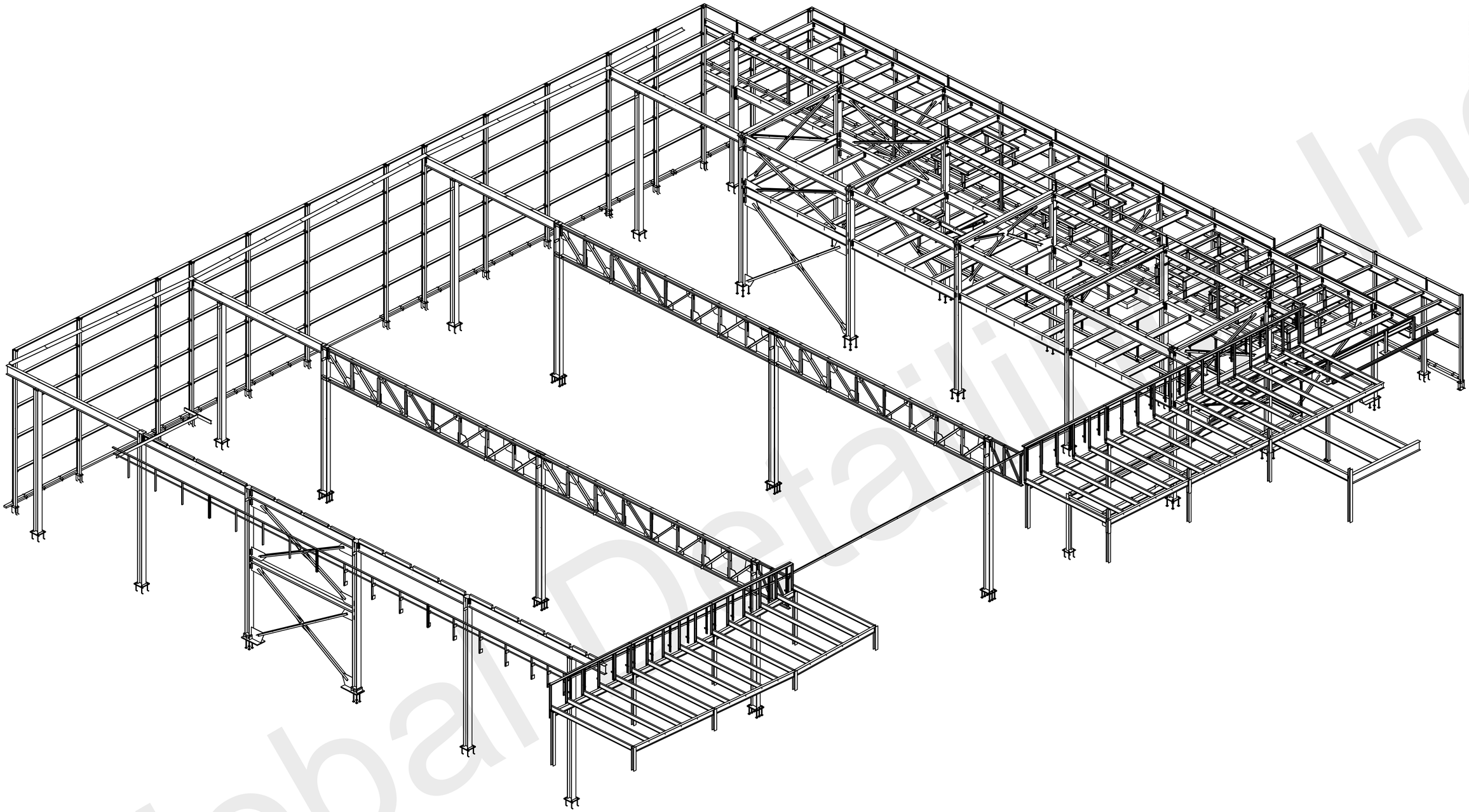

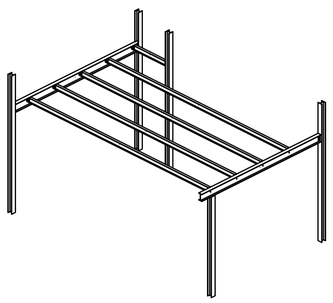

ERECTION NORTH

ALL VERIFIES, REQUEST FOR INFORMATION NOT RESPONDED TO AND/OR DIMENSIONS NOT FURNISHED WILL PLACE AFFECTED STEEL ON HOLD.

JEFFORDS STEEL AND ENGINEERING ASSUMES NO RESPONSIBILITY FOR ERRORS RESULTING FROM CONFLICTS IN CONTRACT DRAWINGS (ARCHITECTURAL/ STRUCTURAL).

GENERAL NOTES:

CHARGES FOR CORRECTIVE WORK WILL NOT BE HONORED UNLESS PREVIOUS APPROVAL IS OBTAINED FROM JEFFORDS STEEL AND ENGINNERING COMPANY.

MEMBERS ARE TO BE ERECTED SO THAT MARKED END IS IN THE SAME LOCATION AS ON THE ERECTION DRAWING.

print record		
1	APP	12-4
1	APP	1-5

job no. 4497
date 1-4-12
drawn by MC
checked by -

revisions		
rev#	date	description

Jeffords
STEEL AND ENGINEERING COMPANY
P.O. BOX 40-439 ROUTE 422
PLATTSBURGH, N.Y. 12901
518-561-4061

customer
ENCOMPASS DEVELOP
DESIGN CONSTRUCTION

project
AKWESASNE MOHAWK CASINO
873 STATE HIGHWAY 37
AKWESASNE, NY

sheet
IS01

Global Detailing Inc

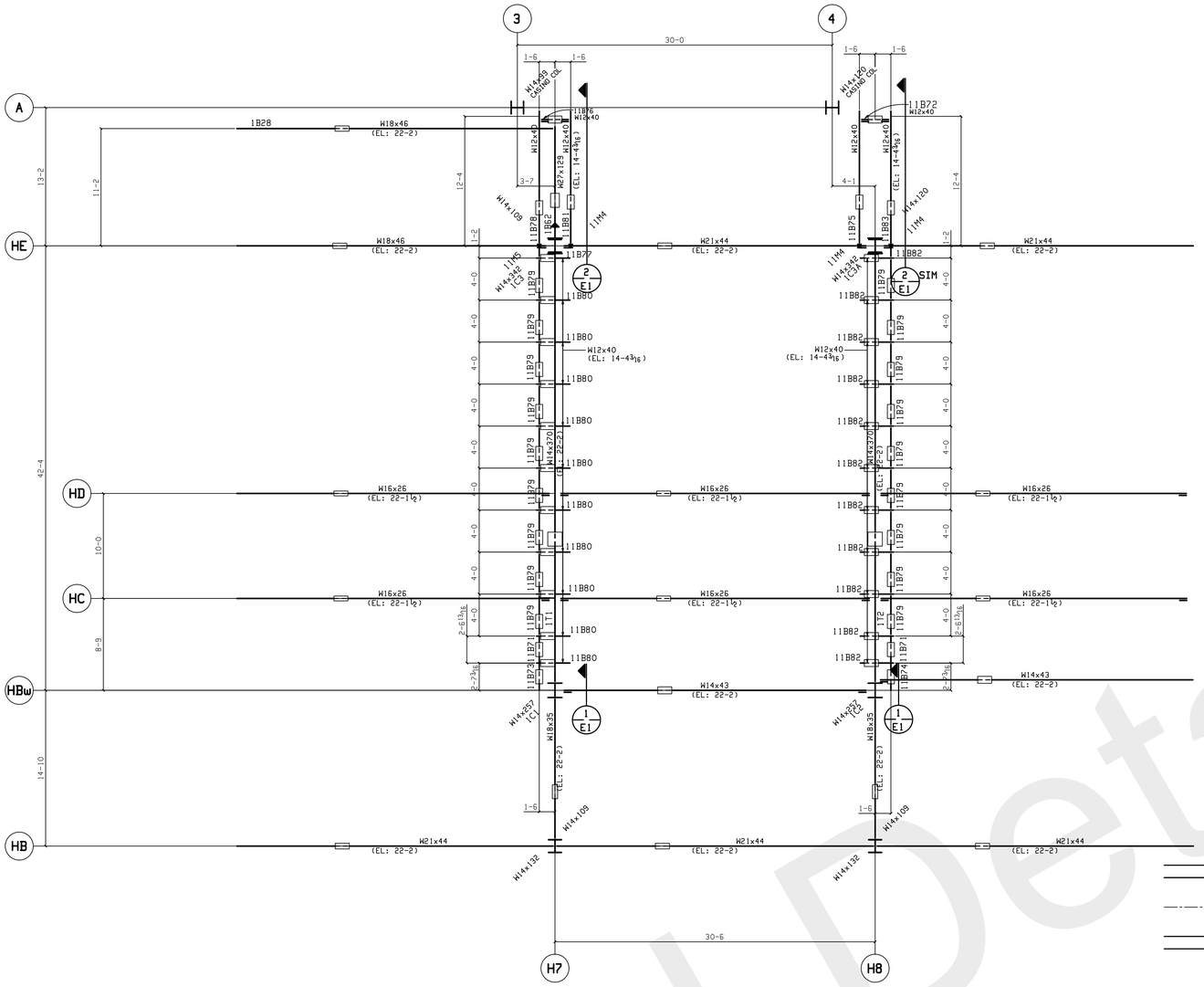

TRUSS PLAN

1) TOP OF STEEL EL. 22'-2" U.N.O.

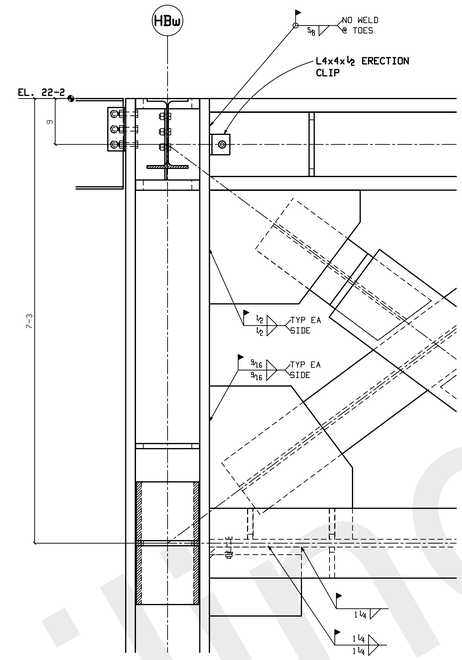

1/E1 SECTION

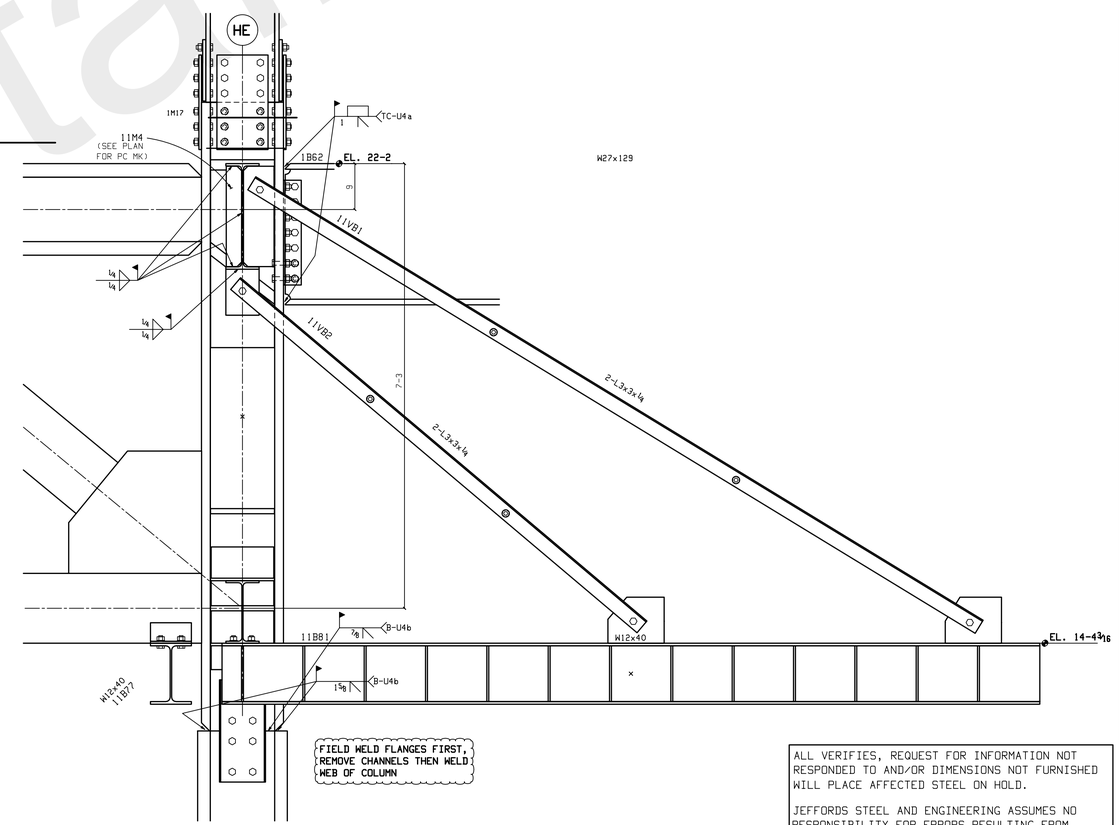

FIELD WELD FLANGES FIRST, REMOVE CHANNELS THEN WELD WEB OF COLUMN

2/E1 SECTION

ALL VERIFIES, REQUEST FOR INFORMATION NOT RESPONDED TO AND/OR DIMENSIONS NOT FURNISHED WILL PLACE AFFECTED STEEL ON HOLD.

JEFFORDS STEEL AND ENGINEERING ASSUMES NO RESPONSIBILITY FOR ERRORS RESULTING FROM CONFLICTS IN CONTRACT DRAWINGS (ARCHITECTURAL/STRUCTURAL).

GENERAL NOTES:

CHARGES FOR CORRECTIVE WORK WILL NOT BE HONORED UNLESS PREVIOUS APPROVAL IS OBTAINED FROM JEFFORDS STEEL AND ENGINNERING COMPANY.

MEMBERS ARE TO BE ERECTED SO THAT MARKED END IS IN THE SAME LOCATION AS ON THE ERECTION DRAWING.

DRAWINGS PREPARED BY, GLOBAL DETAILING, INC. JOB # 12-396

ERECTION NORTH

print record			
1	APP	3-7	
2	FIELD	4-12	

job no. 4503
date 3-12
drawn by TC
checked by - GDI

revisions		
rev#	date	description

STEEL AND ENGINEERING COMPANY
P.O. BOX 40-398 ROUTE 122
PLATTSBURGH, N.Y. 12901
518-561-4061

customer
ENCOMPASS DEVELOP
DESIGN CONSTRUCTION

project
AKWESASNE MOHAWK HOTEL
873 STATE HIGHWAY 37
AKWESASNE, NY

sheet
E1

Global Detailing, Inc

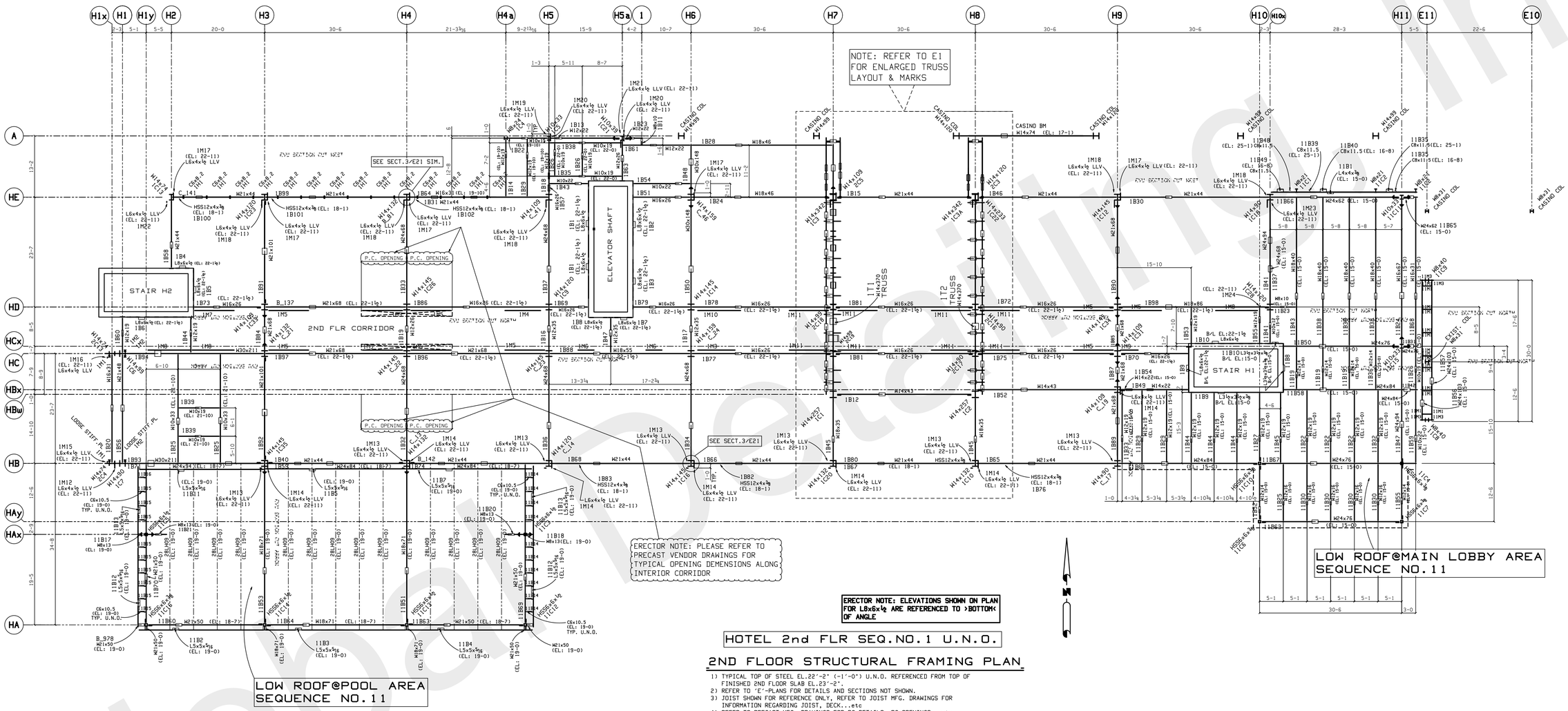

ERECTOR NOTE: ELEVATIONS SHOWN ON PLAN FOR L8x6x½ ARE REFERENCED TO >BOTTOM< OF ANGLE

HOTEL 2nd FLR SEQ.NO.1 U.N.O.

2ND FLOOR STRUCTURAL FRAMING PLAN

1) TYPICAL TOP OF STEEL EL.22'-2" (-1'-0") U.N.O. REFERENCED FROM TOP OF FINISHED 2ND FLOOR SLAB EL.23'-2".
2) REFER TO 'E'-PLANS FOR DETAILS AND SECTIONS NOT SHOWN.
3) JOIST SHOWN FOR REFERENCE ONLY, REFER TO JOIST MFG. DRAWINGS FOR INFORMATION REGARDING JOIST, DECK...etc
4) REFER TO PRECAST MFG. DRAWINGS FOR PC DETAILS, PC OPENINGS...etc

ALL VERIFIES, REQUEST FOR INFORMATION NOT RESPONDED TO AND/OR DIMENSIONS NOT FURNISHED WILL PLACE AFFECTED STEEL ON HOLD.

JEFFORDS STEEL AND ENGINEERING ASSUMES NO RESPONSIBILITY FOR ERRORS RESULTING FROM CONFLICTS IN CONTRACT DRAWINGS (ARCHITECTURAL/ STRUCTURAL).

GENERAL NOTES:

CHARGES FOR CORRECTIVE WORK WILL NOT BE HONORED UNLESS PREVIOUS APPROVAL IS OBTAINED FROM JEFFORDS STEEL AND ENGINNERING COMPANY.

MEMBERS ARE TO BE ERECTED SO THAT MARKED END IS IN THE SAME LOCATION AS ON THE ERECTION DRAWING.

DRAWINGS PREPARED BY, GLOBAL DETAILING, INC. JOB # 12-396

print record			
1	APP	3-12	
2	FIELD	4-12	

job no. 4503
date 3-12
drawn by TC
checked by - GBI

revisions		
rev#	date	description

Jeffords

STEEL AND ENGINEERING COMPANY
P.O. BOX 40-338 ROUTE 122
PLAIN SPRING, N.Y. 12501
518-561-4061

customer
ENCOMPASS DEVELOP
DESIGN CONSTRUCTION

project
AKWESASNE MOHAWK HOTEL
873 STATE HIGHWAY 37
AKWESASNE, NY

sheet
E1A

Global Detailing Inc

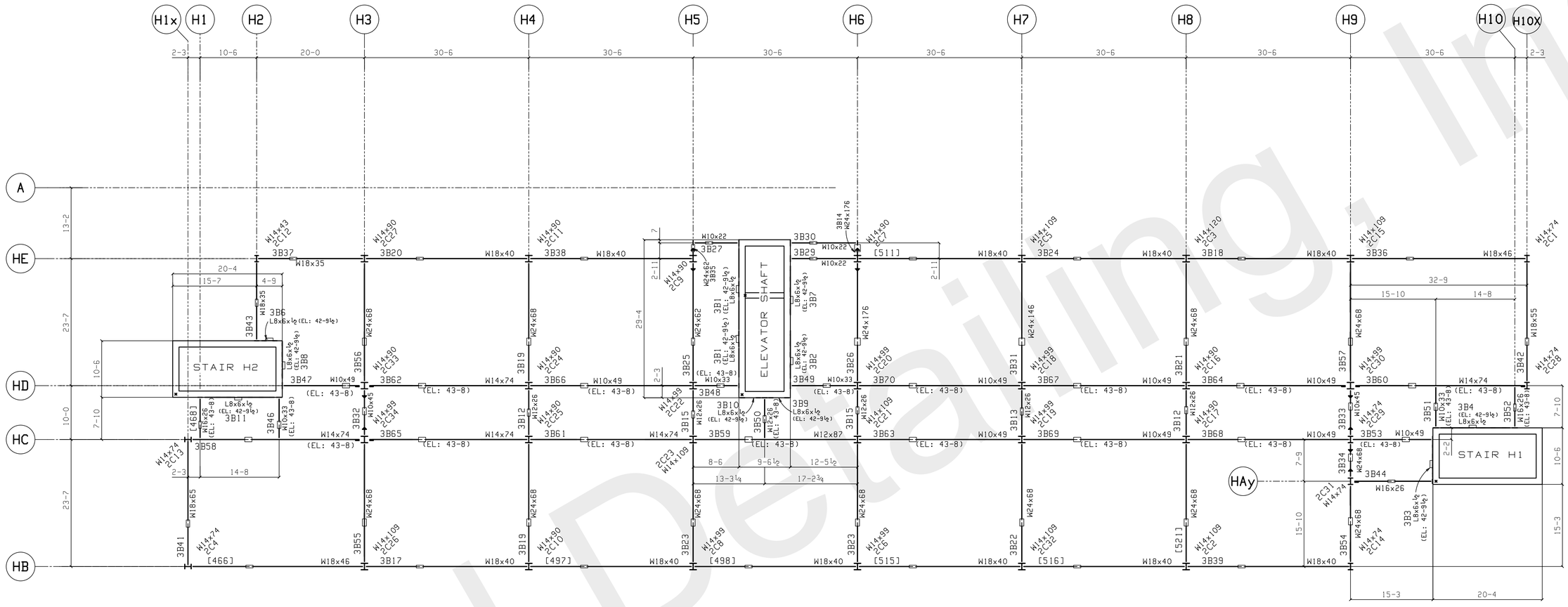

SEQUENCE NO. 3

4TH FLOOR STRUCTURAL FRAMING PLAN

1) TYPICAL TOP OF STEEL EL.42'-10" (-1'-0") U.N.O. REFERENCED FROM TOP OF FINISHED 4TH FLOOR SLAB EL.43'-10".
2) REFER TO 'E'-PLANS FOR DETAILS AND SECTIONS NOT SHOWN.
3) REFER TO PRECAST MFG. DRAWINGS FOR PC DETAILS, PC OPENINGS...etc

ERECTOR NOTE: ELEVATIONS SHOWN ON PLAN FOR L8x6x½ ARE REFERENCED TO >BOTTOM< OF ANGLE

ALL VERIFIES, REQUEST FOR INFORMATION NOT RESPONDED TO AND/OR DIMENSIONS NOT FURNISHED WILL PLACE AFFECTED STEEL ON HOLD.

JEFFORDS STEEL AND ENGINEERING ASSUMES NO RESPONSIBILITY FOR ERRORS RESULTING FROM CONFLICTS IN CONTRACT DRAWINGS (ARCHITECTURAL/STRUCTURAL).

GENERAL NOTES:

CHARGES FOR CORRECTIVE WORK WILL NOT BE HONORED UNLESS PREVIOUS APPROVAL IS OBTAINED FROM JEFFORDS STEEL AND ENGINNERING COMPANY.

MEMBERS ARE TO BE ERECTED SO THAT MARKED END IS IN THE SAME LOCATION AS ON THE ERECTION DRAWING.

DRAWINGS PREPARED BY, GLOBAL DETAILING, INC. JOB # 12-396

print record			
1	APP	3-12	

job no. 4503
date 3-12
drawn by TC
checked by - QB

revisions		
rev#	date	description

JEFFORDS
STEEL AND ENGINEERING COMPANY
P.O. BOX 40-338 ROUTE 422
PLATTSBURGH, N.Y. 12901
518-561-4061

customer
ENCOMPASS DEVELOP
DESIGN CONSTRUCTION

project
AKWESASNE MOHAWK HOTEL
873 STATE HIGHWAY 37
AKWESASNE, NY

sheet
E3

Global Detailing, Inc.

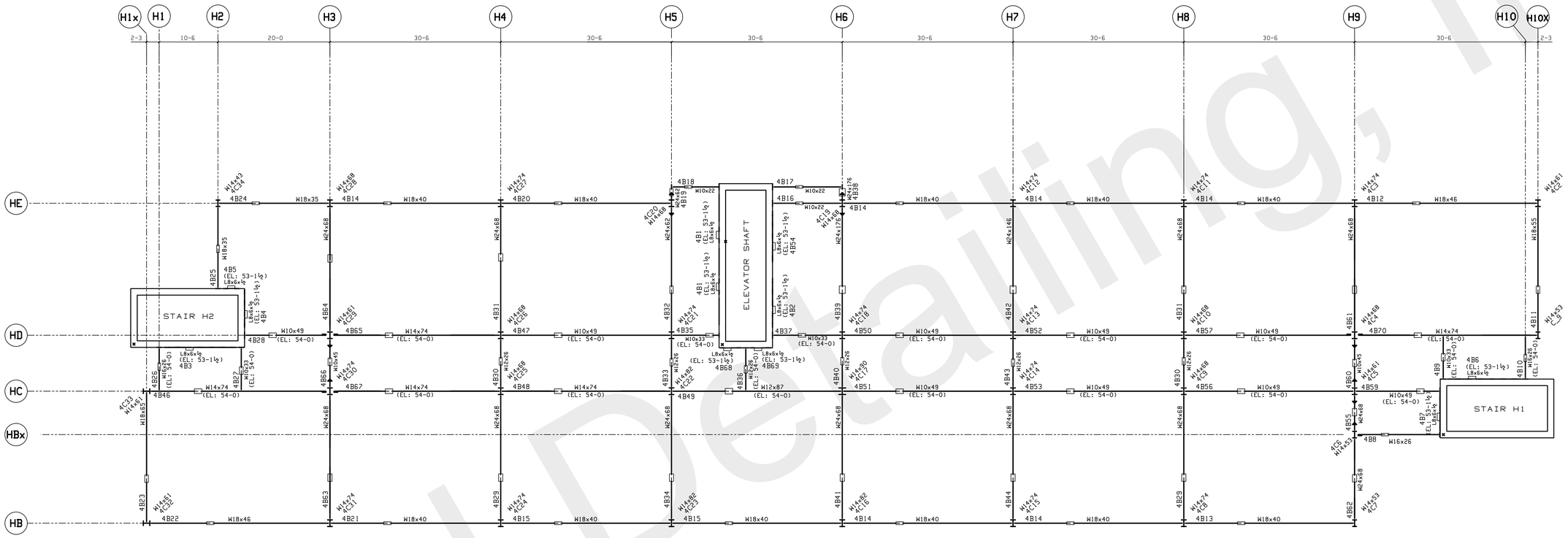

ERECTOR NOTE: ELEVATIONS SHOWN ON PLAN FOR L8x6x½ ARE REFERENCED TO >BOTTOM< OF ANGLE

SEQUENCE NO.4

5TH FLOOR STRUCTURAL FRAMING PLAN

1) TYPICAL TOP OF STEEL EL.53'-2" (-1'-0") U.N.O. REFERENCED FROM TOP OF FINISHED 5TH FLOOR SLAB EL.54'-2".
2) REFER TO 'E'-PLANS FOR DETAILS AND SECTIONS NOT SHOWN.
3) REFER TO PRECAST MFG. DRAWINGS FOR PC DETAILS, PC OPENINGS...etc

ALL VERIFIES, REQUEST FOR INFORMATION NOT RESPONDED TO AND/OR DIMENSIONS NOT FURNISHED WILL PLACE AFFECTED STEEL ON HOLD.

JEFFORDS STEEL AND ENGINEERING ASSUMES NO RESPONSIBILITY FOR ERRORS RESULTING FROM CONFLICTS IN CONTRACT DRAWINGS (ARCHITECTURAL/ STRUCTURAL).

GENERAL NOTES:

CHARGES FOR CORRECTIVE WORK WILL NOT BE HONORED UNLESS PREVIOUS APPROVAL IS OBTAINED FROM JEFFORDS STEEL AND ENGINNERING COMPANY.

MEMBERS ARE TO BE ERECTED SO THAT MARKED END IS IN THE SAME LOCATION AS ON THE ERECTION DRAWING.

DRAWINGS PREPARED BY, GLOBAL DETAILING, INC. JOB # 12-396

print record		
1	APPROVED	5.11.12

job no. 4503
date 3-12
drawn by TC
checked by - QBI

revisions		
rev#	date	description

STEEL AND ENGINEERING COMPANY
P.O. BOX 40-338 ROUTE 122
PLATTSBURGH, N.Y. 12901
518-561-4061

customer
ENCOMPASS DEVELOP
DESIGN CONSTRUCTION

project
AKWESASNE MOHAWK HOTEL
873 STATE HIGHWAY 37
AKWESASNE, NY

sheet
E4

Global Detailing, Inc

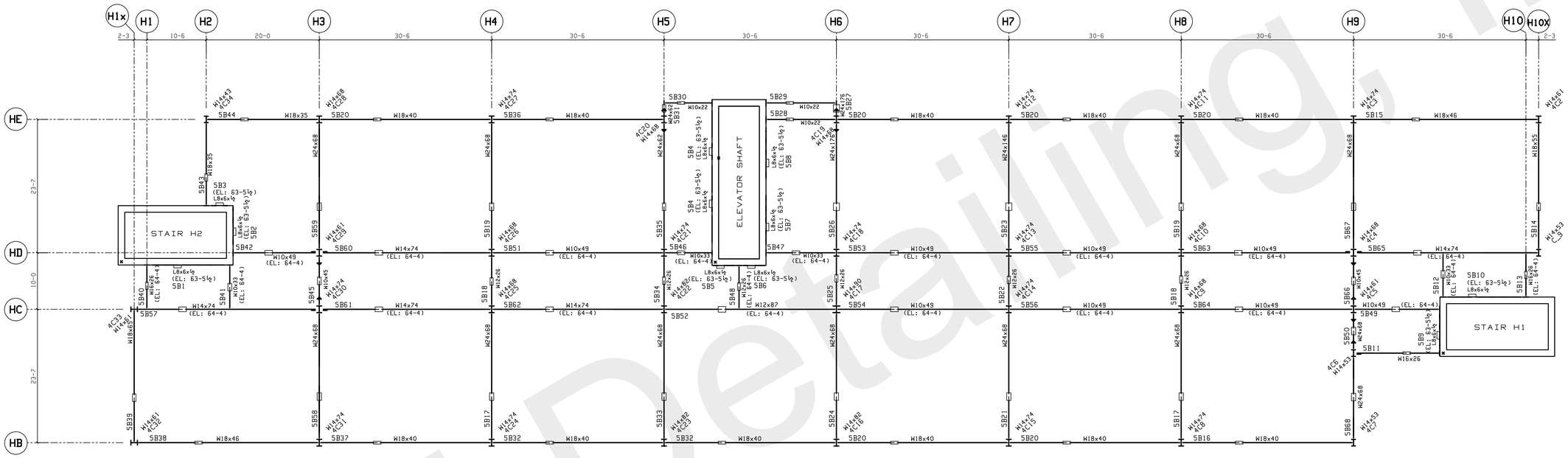

ERECTION NORTH

ERECTOR NOTE: ELEVATIONS SHOWN ON PLAN FOR L8x6x½ ARE REFERENCED TO >BOTTOM< OF ANGLE

SEQUENCE NO.5

6TH FLOOR STRUCTURAL FRAMING PLAN

1) TYPICAL TOP OF STEEL EL.63'-6" (-1'-0") U.N.O. REFERENCED FROM TOP OF FINISHED 6TH FLOOR SLAB EL.64'-6".
2) REFER TO 'E'-PLANS FOR DETAILS AND SECTIONS NOT SHOWN.
3) REFER TO PRECAST MFG. DRAWINGS FOR PC DETAILS, PC OPENINGS...etc

ALL VERIFIES, REQUEST FOR INFORMATION NOT RESPONDED TO AND/OR DIMENSIONS NOT FURNISHED WILL PLACE AFFECTED STEEL ON HOLD.

JEFFORDS STEEL AND ENGINEERING ASSUMES NO RESPONSIBILITY FOR ERRORS RESULTING FROM CONFLICTS IN CONTRACT DRAWINGS (ARCHITECTURAL/STRUCTURAL).

GENERAL NOTES:

CHARGES FOR CORRECTIVE WORK WILL NOT BE HONORED UNLESS PREVIOUS APPROVAL IS OBTAINED FROM JEFFORDS STEEL AND ENGINNERING COMPANY.

MEMBERS ARE TO BE ERECTED SO THAT MARKED END IS IN THE SAME LOCATION AS ON THE ERECTION DRAWING.

DRAWINGS PREPARED BY, GLOBAL DETAILING, INC. JOB # 12-396

print record		
1	APPROVED	5.11.12

job no. 4503
date 3-12
drawn by TC
checked by - QB

revisions		
rev#	date	description

customer
ENCOMPASS DEVELOP
DESIGN CONSTRUCTION

STEEL AND ENGINEERING COMPANY
P.O. BOX 40-398 ROUTE 122
PLATTSBURGH, N.Y. 12901
518-561-4061

project
AKWESASNE MOHAWK HOTEL
873 STATE HIGHWAY 37
AKWESASNE, NY

sheet
E5

Global Detailing, Inc

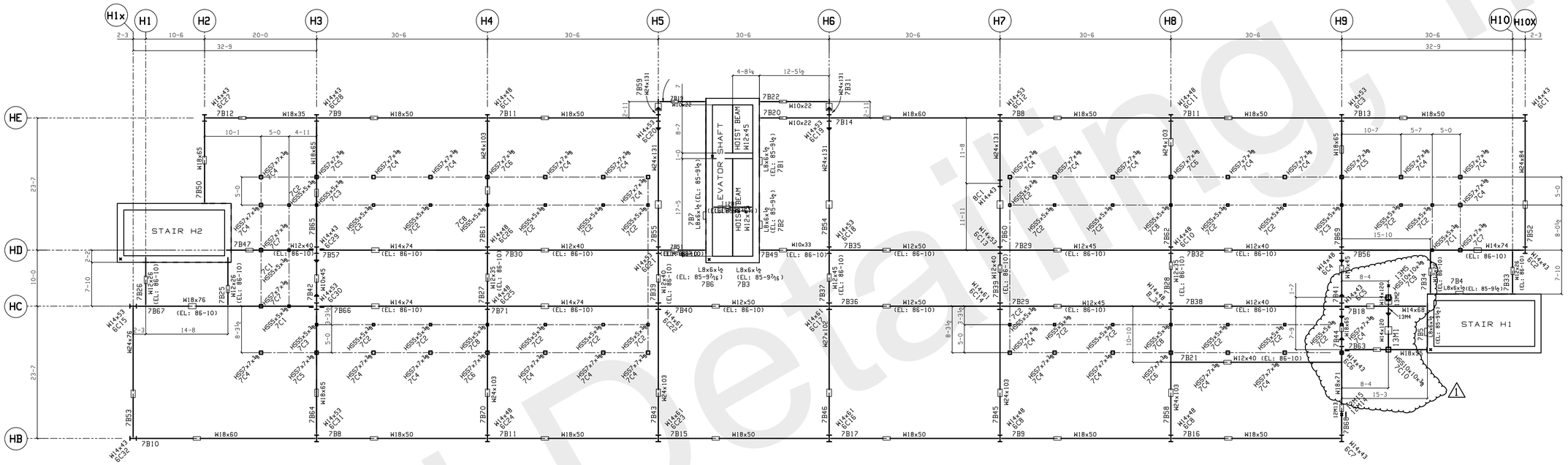

ERECTOR NOTE: ELEVATIONS SHOWN ON PLAN FOR L8x6x½ ARE REFERENCED TO >BOTTOM< OF ANGLE

SEQUENCE NO.7

MAIN ROOF STRUCTURAL FRAMING PLAN

1) TYPICAL TOP OF STEEL EL.85'-10" (-1'-2") U.N.O. REFERENCED FROM TOP OF FINISHED 7TH FLOOR SLAB EL.87'-0".
2) REFER TO 'E'-PLANS FOR DETAILS AND SECTIONS NOT SHOWN.
3) REFER TO PRECAST MFG. DRAWINGS FOR PC DETAILS, PC OPENINGS...etc

ALL VERIFIES, REQUEST FOR INFORMATION NOT RESPONDED TO AND/OR DIMENSIONS NOT FURNISHED WILL PLACE AFFECTED STEEL ON HOLD.

JEFFORDS STEEL AND ENGINEERING ASSUMES NO RESPONSIBILITY FOR ERRORS RESULTING FROM CONFLICTS IN CONTRACT DRAWINGS (ARCHITECTURAL/ STRUCTURAL).

GENERAL NOTES:

CHARGES FOR CORRECTIVE WORK WILL NOT BE HONORED UNLESS PREVIOUS APPROVAL IS OBTAINED FROM JEFFORDS STEEL AND ENGINNERING COMPANY.

MEMBERS ARE TO BE ERECTED SO THAT MARKED END IS IN THE SAME LOCATION AS ON THE ERECTION DRAWING.

DRAWINGS PREPARED BY, GLOBAL DETAILING, INC. JOB # 12-396

print record			
1	APPVD	5.24.12	
2	RECORD	3.6.13	

job no. 4503
date 3-12
drawn by TC
checked by - GBI

revisions		
rev#	date	description
1	3.6.13	ADDITIONAL BEAMS ADDED FOR PRECAST PANEL AND LANTERN SUPPORT AT MAIN ROOF

customer
ENCOMPASS DEVELOP
DESIGN CONSTRUCTION

project
AKWESASNE MOHAWK HOTEL
873 STATE HIGHWAY 37
AKWESASNE, NY

STEEL AND ENGINEERING COMPANY
P.O. BOX 40-398 ROUTE 122
PLAINFIELD, NY 12901
518-561-4061

sheet
E7
1

Global Detailing, Inc

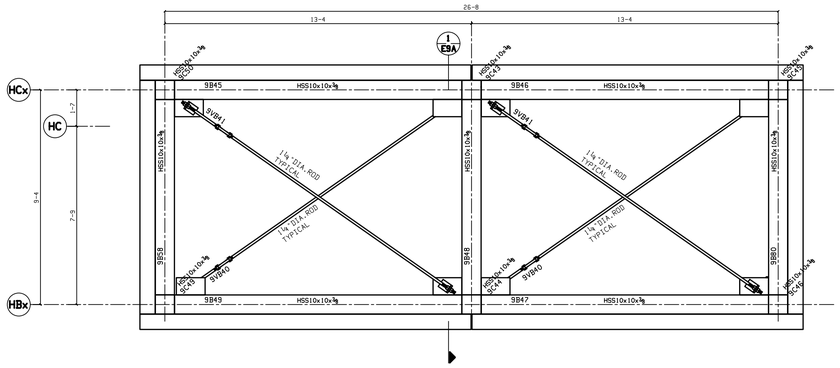

TOWER LANTERN FRAMING AT EL.124'-10"
(REF.DESIGN DWG.HTL-S50-02-05)

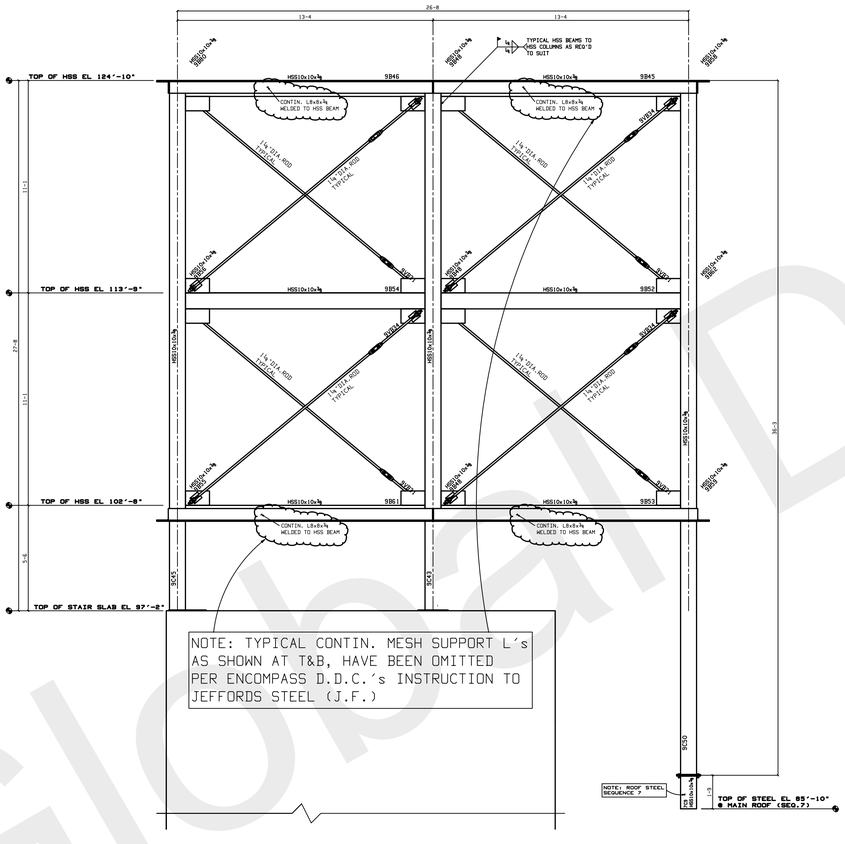

NOTE: TYPICAL CONTIN. MESH SUPPORT L's AS SHOWN AT T&B, HAVE BEEN OMITTED PER ENCOMPASS D.D.C.'s INSTRUCTION TO JEFFORDS STEEL (J.F.)

TOWER LANTERN NORTH ELEVATION
(LOOKING SOUTH)

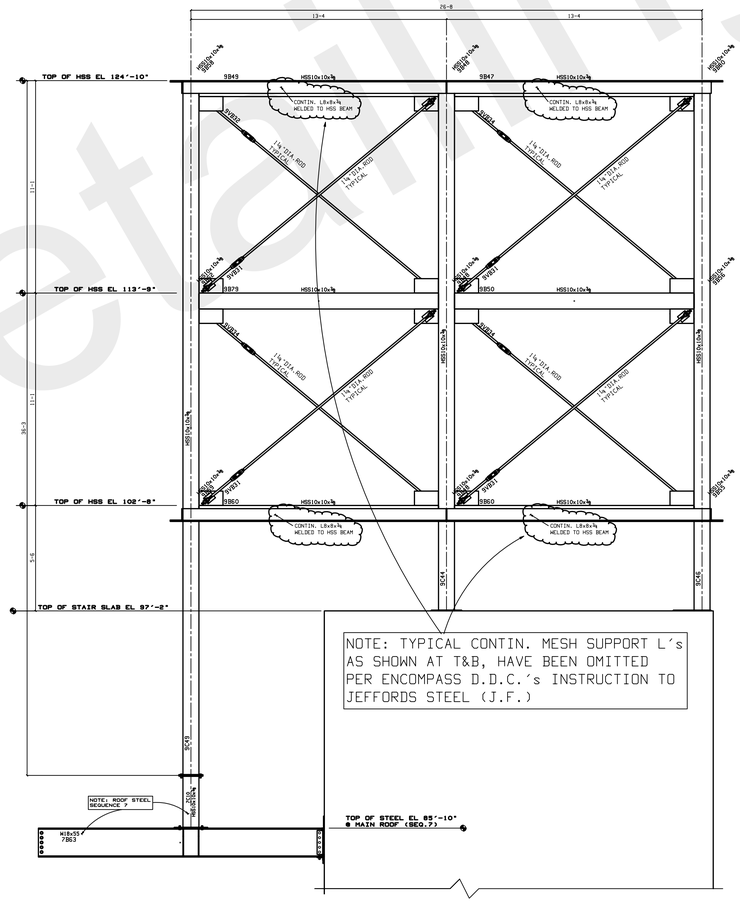

NOTE: TYPICAL CONTIN. MESH SUPPORT L's AS SHOWN AT T&B, HAVE BEEN OMITTED PER ENCOMPASS D.D.C.'s INSTRUCTION TO JEFFORDS STEEL (J.F.)

TOWER LANTERN SOUTH ELEVATION
(LOOKING NORTH)

ERECTION NORTH

ALL VERIFIES, REQUEST FOR INFORMATION NOT RESPONDED TO AND/OR DIMENSIONS NOT FURNISHED WILL PLACE AFFECTED STEEL ON HOLD.

JEFFORDS STEEL AND ENGINEERING ASSUMES NO RESPONSIBILITY FOR ERRORS RESULTING FROM CONFLICTS IN CONTRACT DRAWINGS (ARCHITECTURAL/ STRUCTURAL).

ERECTOR NOTE: WORK THIS ERECTION SHEET WITH ERECTION SHEET E9A

GENERAL NOTES:

CHARGES FOR CORRECTIVE WORK WILL NOT BE HONORED UNLESS PREVIOUS APPROVAL IS OBTAINED FROM JEFFORDS STEEL AND ENGINNERING COMPANY.

MEMBERS ARE TO BE ERECTED SO THAT MARKED END IS IN THE SAME LOCATION AS ON THE ERECTION DRAWING.

DRAWINGS PREPARED BY, GLOBAL DETAILING, INC. JOB # 12-396

print record			
1	APP ONLY	6.22.12	
2	FIELD	7.5.12	

job no. 4503
date 2-12
drawn by AO
checked by - CDI

revisions		
rev#	date	description

Jeffords
STEEL AND ENGINEERING COMPANY
P.O. BOX 40-439 ROUTE 422
PLATTSBURGH, N.Y. 12901
518-561-4061

customer
ENCOMPASS DEVELOP
DESIGN CONSTRUCTION

project
AKWESASNE MOHAWK HOTEL
873 STATE HIGHWAY 37
AKWESASNE, NY

sheet
E9

Global Detailing, Inc

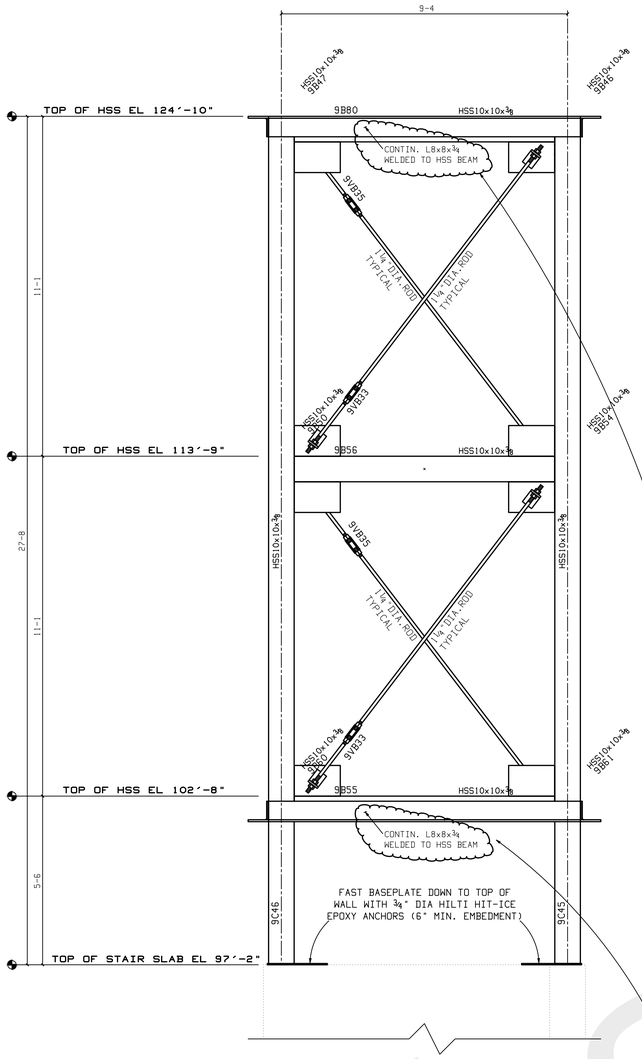

TOWER LANTERN EAST ELEVATION
(LOOKING WEST)

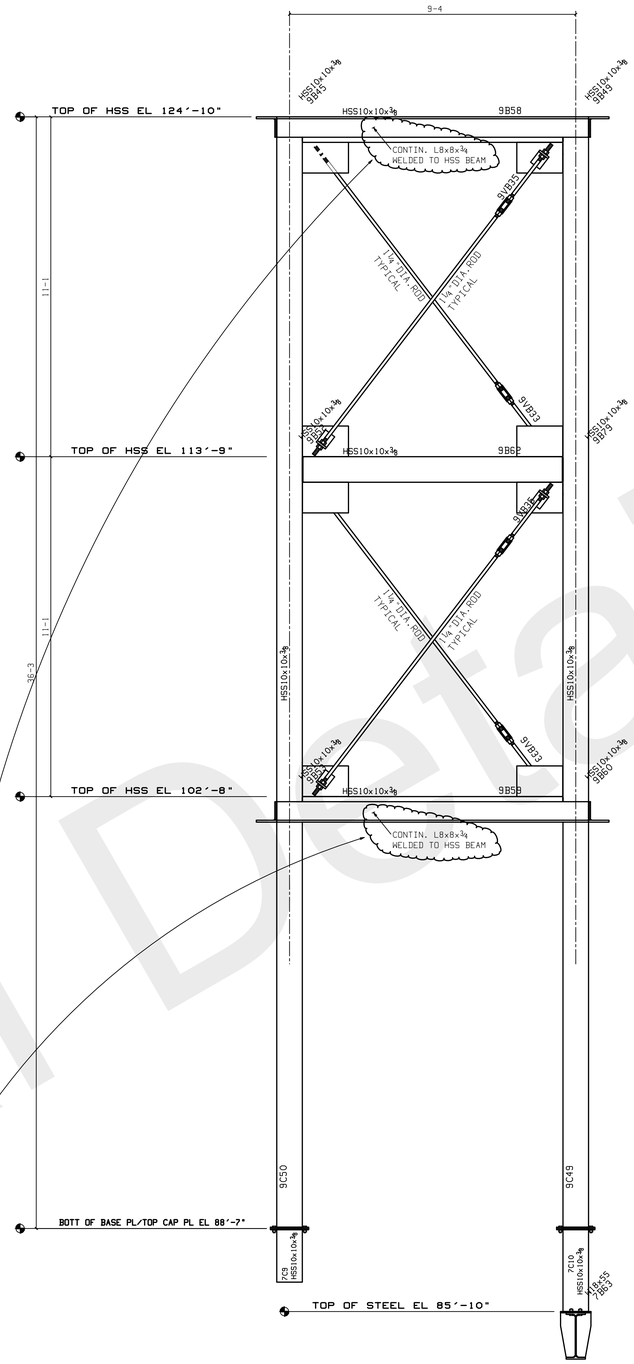

TOWER LANTERN WEST ELEVATION
(LOOKING EAST)

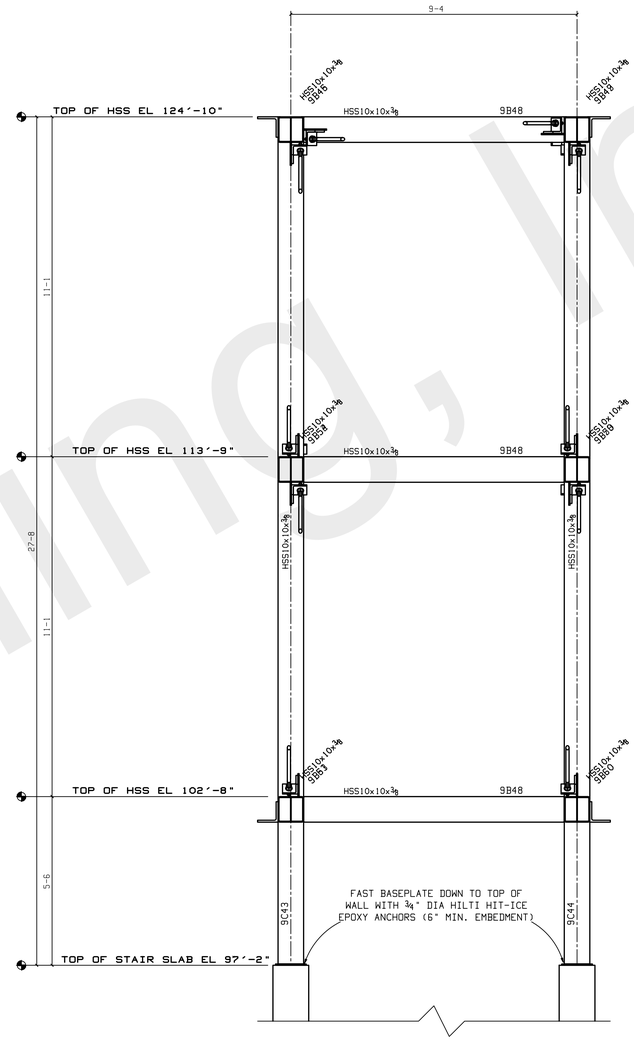

1/E1 SECTION
(LOOKING EAST)

ERECTION NORTH

NOTE: TYPICAL CONTIN. MESH SUPPORT L's AS SHOWN AT T&B, HAVE BEEN OMITTED PER ENCOMPASS D.D.C.'s INSTRUCTION TO JEFFORDS STEEL (J.F.)

ALL VERIFIES, REQUEST FOR INFORMATION NOT RESPONDED TO AND/OR DIMENSIONS NOT FURNISHED WILL PLACE AFFECTED STEEL ON HOLD.

JEFFORDS STEEL AND ENGINEERING ASSUMES NO RESPONSIBILITY FOR ERRORS RESULTING FROM CONFLICTS IN CONTRACT DRAWINGS (ARCHITECTURAL/STRUCTURAL).

ERECTOR NOTE: WORK THIS ERECTION SHEET WITH ERECTION SHEET E9

DRAWINGS PREPARED BY, GLOBAL DETAILING, INC. JOB # 12-396

GENERAL NOTES:

CHARGES FOR CORRECTIVE WORK WILL NOT BE HONORED UNLESS PREVIOUS APPROVAL IS OBTAINED FROM JEFFORDS STEEL AND ENGINNERING COMPANY.

MEMBERS ARE TO BE ERECTED SO THAT MARKED END IS IN THE SAME LOCATION AS ON THE ERECTION DRAWING.

print record			
1	APP ONLY	6.22.12	
2	FIELD	7.5.12	

job no. 4503
date 3-12
drawn by AO
checked by - CDI

revisions		
rev#	date	description

STEEL AND ENGINEERING COMPANY
P.O. BOX 40-398 ROUTE 422
PLATTSBURGH, N.Y. 12901
518-561-4061

customer
ENCOMPASS DEVELOP
DESIGN CONSTRUCTION

project
AKWESASNE MOHAWK HOTEL
873 STATE HIGHWAY 37
AKWESASNE, NY

sheet
E9A

Global Detailing, Inc

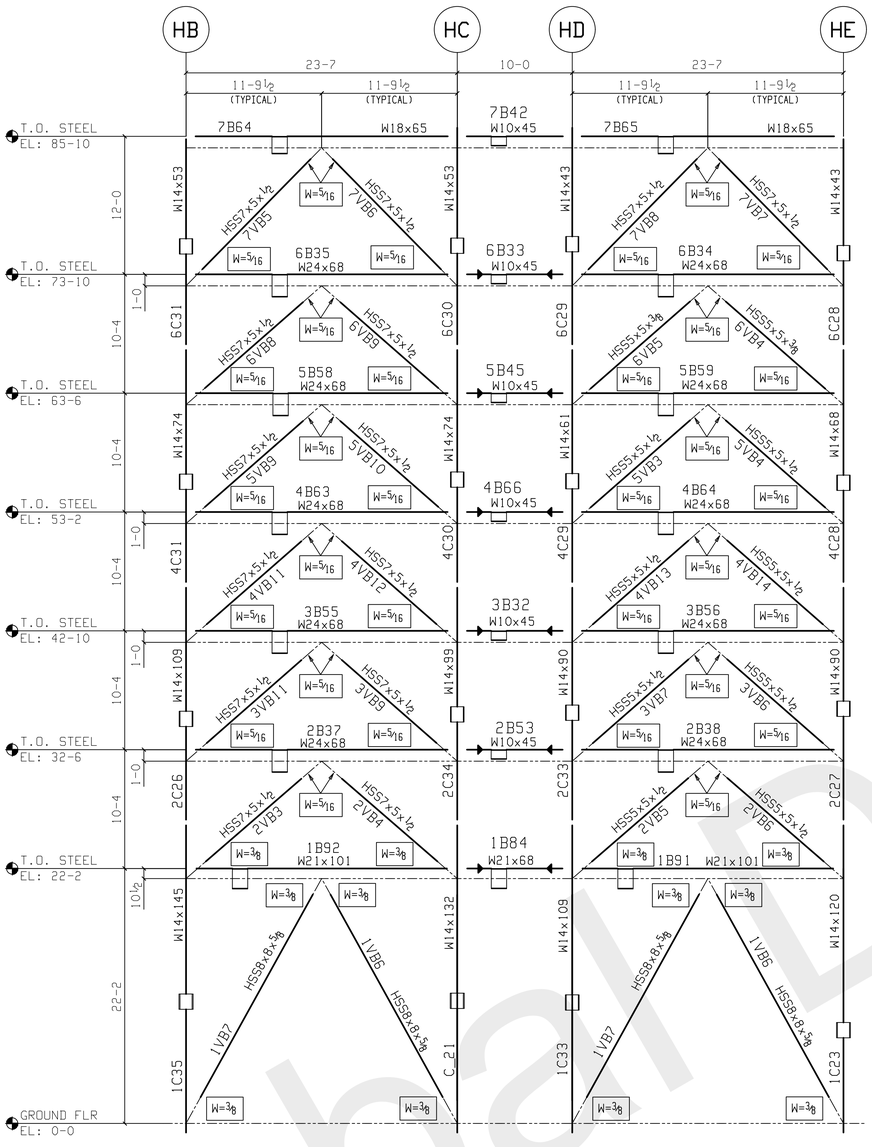

VERTICAL BRACE @ COLUMNLINE "H3"

(LOOKING WEST)

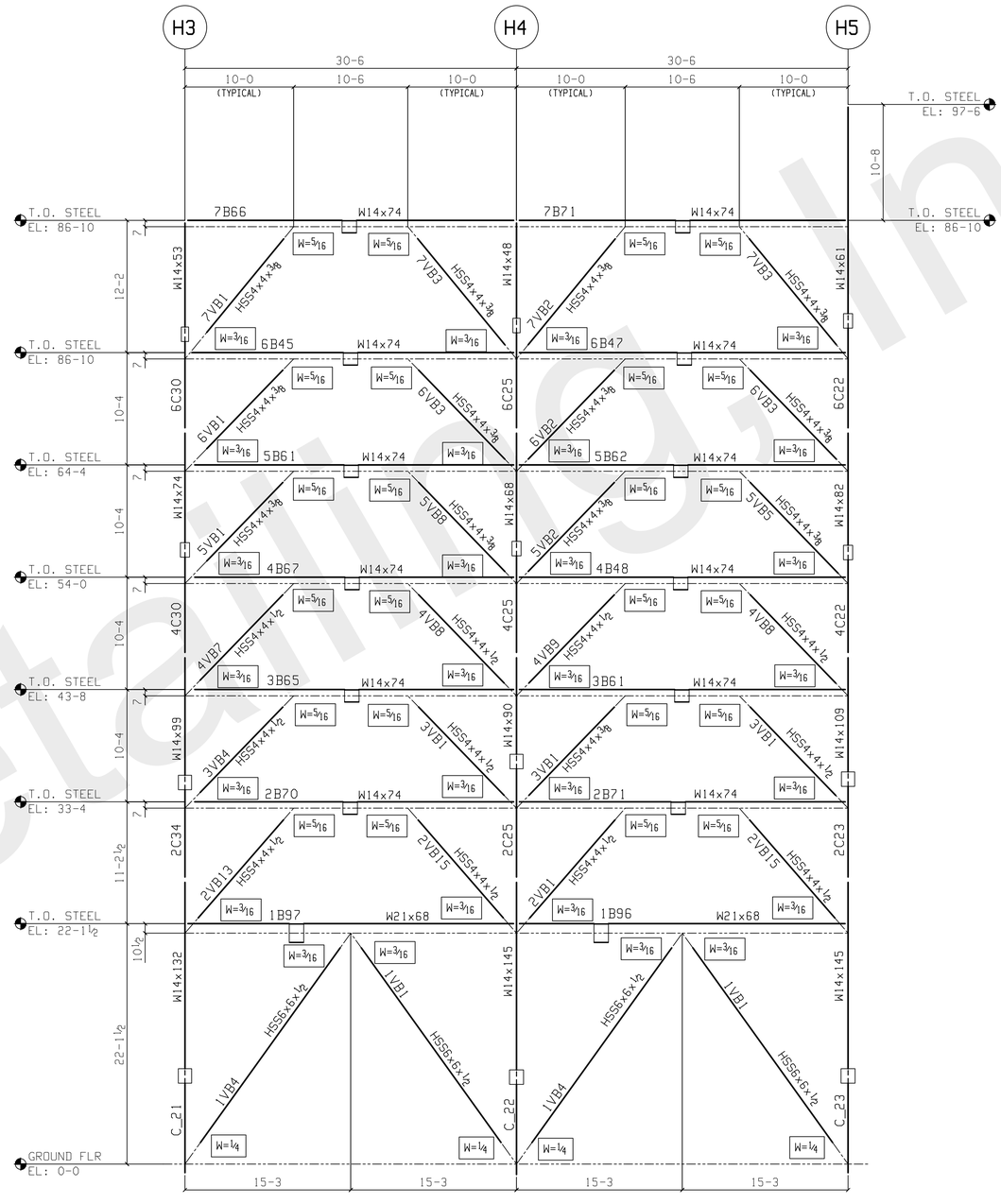

VERTICAL BRACE @ COLUMNLINE "HC"

(LOOKING NORTH)

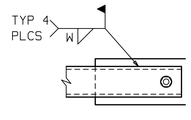

TYPICAL WELD CONNECTION AT TUBE BRACE TO GUSSET PLATE

NOTE: W = WELD SIZE
(SEE BRACING ELEVATIONS)

ALL VERIFIES, REQUEST FOR INFORMATION NOT RESPONDED TO AND/OR DIMENSIONS NOT FURNISHED WILL PLACE AFFECTED STEEL ON HOLD.

JEFFORDS STEEL AND ENGINEERING ASSUMES NO RESPONSIBILITY FOR ERRORS RESULTING FROM CONFLICTS IN CONTRACT DRAWINGS (ARCHITECTURAL/ STRUCTURAL).

GENERAL NOTES:

CHARGES FOR CORRECTIVE WORK WILL NOT BE HONORED UNLESS PREVIOUS APPROVAL IS OBTAINED FROM JEFFORDS STEEL AND ENGINNERING COMPANY.

MEMBERS ARE TO BE ERECTED SO THAT MARKED END IS IN THE SAME LOCATION AS ON THE ERECTION DRAWING.

DRAWINGS PREPARED BY, GLOBAL DETAILING, INC. JOB # 12-396

print record			
1	APP	3-12	
1	FIELD	4-12	
1	FIELD	5-7	
1	FIELD	5.11.12	
1	FIELD	5.18.12	
1	FIELD	5.24.12	

job no. 4503
date 3-12
drawn by TC
checked by - GDI

revisions

1	5-7	GEN. REVS & ADDED WELD DETAIL

Jeffords
STEEL AND ENGINEERING COMPANY
P.O. BOX 40-398 ROUTE 422
PLATTSBURGH, N.Y. 12901
518-561-4061

customer
ENCOMPASS DEVELOP
DESIGN CONSTRUCTION

project
AKWESASNE MOHAWK HOTEL
873 STATE HIGHWAY 37
AKWESASNE, NY

sheet
E10

Global Detailing, Inc

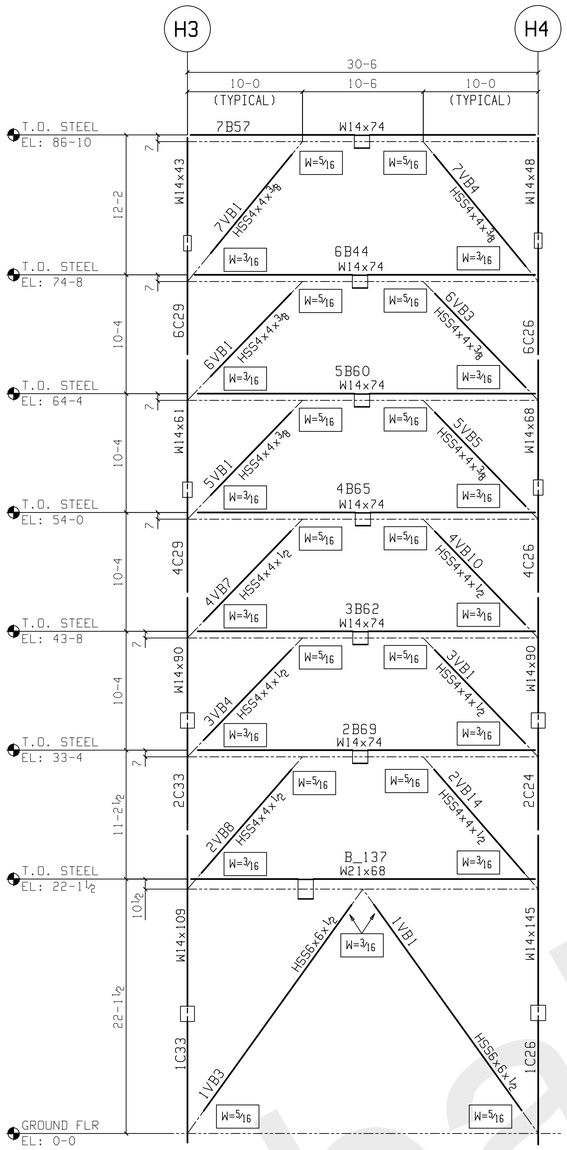

VERTICAL BRACE @ COLUMNLINE "HD"

(LOOKING NORTH)

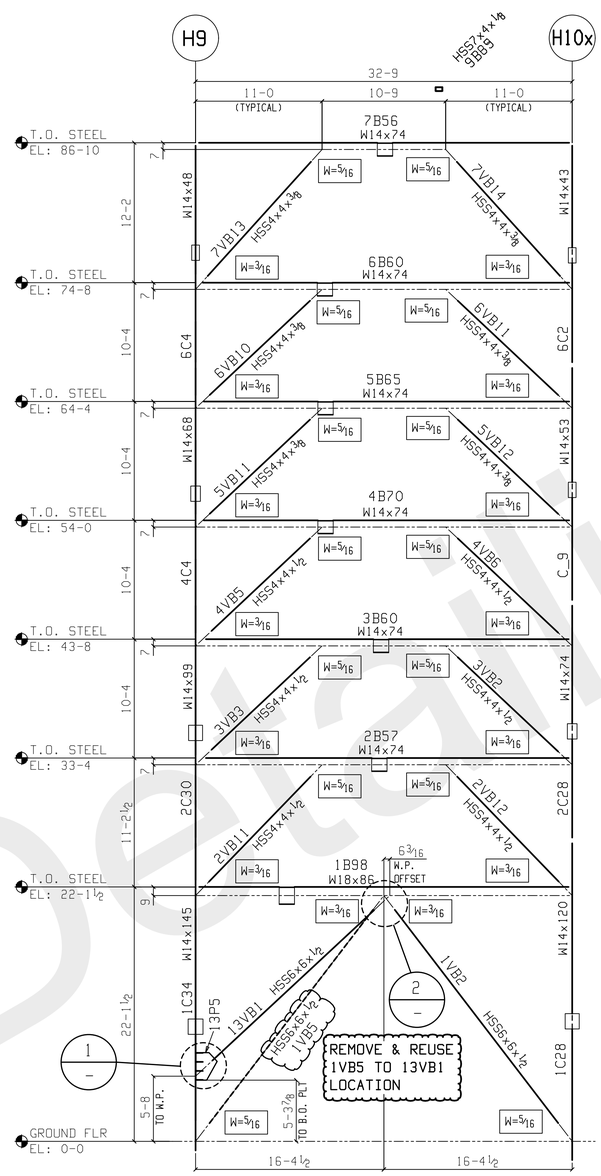

VERTICAL BRACE @ COLUMNLINE "HD"

(LOOKING NORTH)

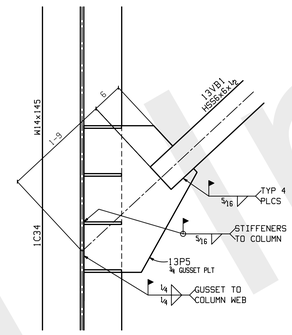

1 SECTION

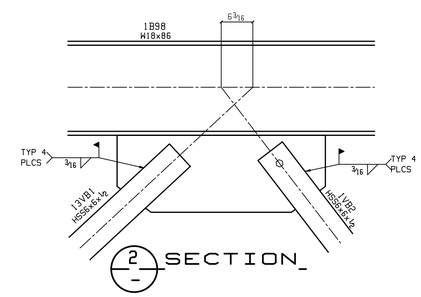

2 SECTION

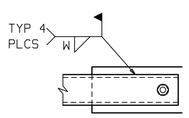

TYPICAL WELD CONNECTION AT TUBE BRACE TO GUSSET PLATE

NOTE: W = WELD SIZE
(SEE BRACING ELEVATIONS)

ALL VERIFIES, REQUEST FOR INFORMATION NOT RESPONDED TO AND/OR DIMENSIONS NOT FURNISHED WILL PLACE AFFECTED STEEL ON HOLD.

JEFFORDS STEEL AND ENGINEERING ASSUMES NO RESPONSIBILITY FOR ERRORS RESULTING FROM CONFLICTS IN CONTRACT DRAWINGS (ARCHITECTURAL/ STRUCTURAL).

GENERAL NOTES:

CHARGES FOR CORRECTIVE WORK WILL NOT BE HONORED UNLESS PREVIOUS APPROVAL IS OBTAINED FROM JEFFORDS STEEL AND ENGINNERING COMPANY.

MEMBERS ARE TO BE ERECTED SO THAT MARKED END IS IN THE SAME LOCATION AS ON THE ERECTION DRAWING.

DRAWINGS PREPARED BY, GLOBAL DETAILING, INC. JOB # 12-396

print record			
1	APP	3-12	
1	FIELD	4-12	
1	FIELD	5-7	
1	FIELD	5.11.12	
1	FIELD	5.18.12	
1	FIELD	5.24.12	

job no. 4503
date 3-12
drawn by TC
checked by - QB

revisions

1	5-7	GEN. REVS & ADDED WELD DETAIL
2	8-16	MODIFY BRACE AT "HD" & "H9"

STEEL AND ENGINEERING COMPANY
P.O. BOX 40-398 ROUTE 122
PLATTSBURGH, N.Y. 12901
518-561-4061

customer
ENCOMPASS DEVELOP
DESIGN CONSTRUCTION

project
AKWESASNE MOHAWK HOTEL
873 STATE HIGHWAY 37
AKWESASNE, NY

sheet
E11

Global Detailing, Inc.

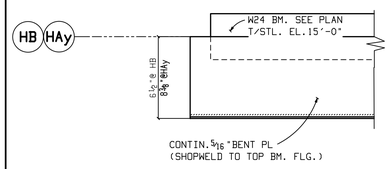

1 / E20 PERIMETER DECK DETAIL
(REF. SECT.TDS-20 / GEN S02-00-04)

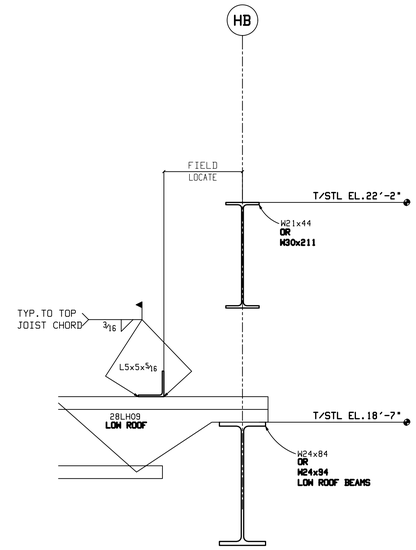

3 / E20 SECTION
REF. SECT2 S50-02-01

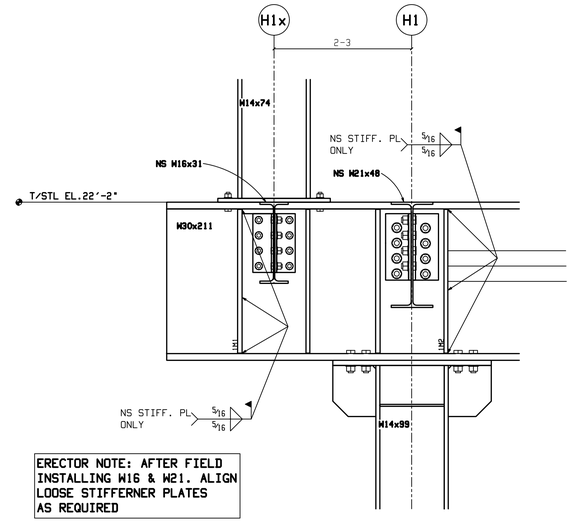

ERECTOR NOTE: AFTER FIELD INSTALLING W16 & W21. ALIGN LOOSE STIFFERNER PLATES AS REQUIRED

4 / E20 SECTION
REF. SECT2 S50-02-01

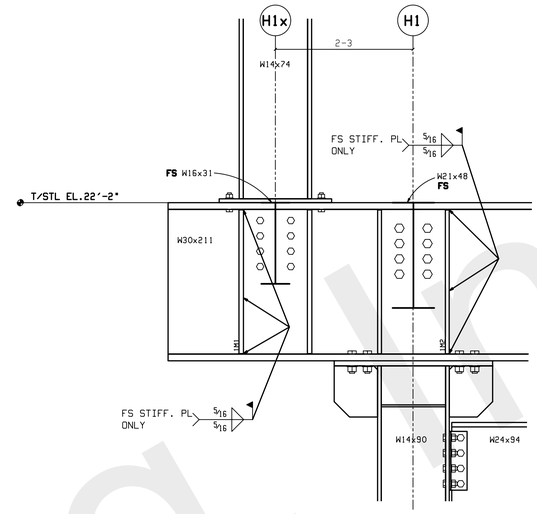

ERECTOR NOTE: AFTER FIELD INSTALLING W16 & W21. ALIGN LOOSE STIFFERNER PLATES AS REQUIRED

5 / E20 SECTION
REF. SECT2A S50-02-01

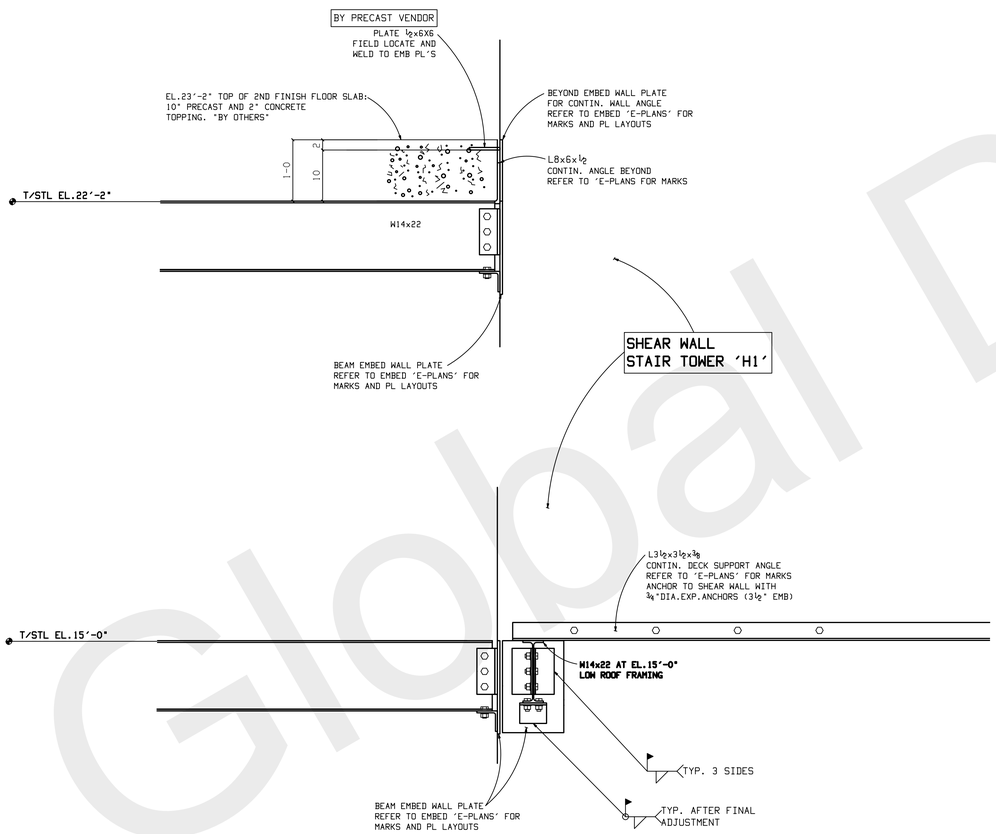

2 / E20 SECTION
REF SECTIONS:
6&7 S50-02-01 AND 1&4 S50-02-02

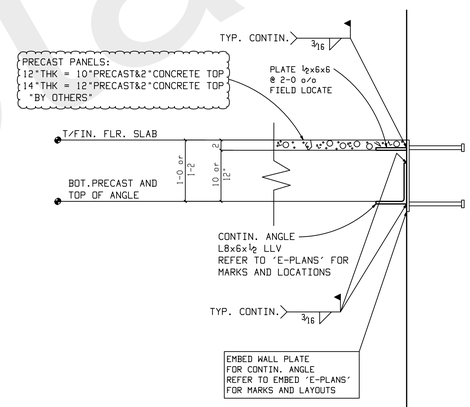

6 / E20 SECTION
REF. SECTION 6 / S50-02-01
REF. SECTION 1 / S50-02-02

ALL VERIFIES, REQUEST FOR INFORMATION NOT RESPONDED TO AND/OR DIMENSIONS NOT FURNISHED WILL PLACE AFFECTED STEEL ON HOLD.

JEFFORDS STEEL AND ENGINEERING ASSUMES NO RESPONSIBILITY FOR ERRORS RESULTING FROM CONFLICTS IN CONTRACT DRAWINGS (ARCHITECTURAL/STRUCTURAL).

GENERAL NOTES:

CHARGES FOR CORRECTIVE WORK WILL NOT BE HONORED UNLESS PREVIOUS APPROVAL IS OBTAINED FROM JEFFORDS STEEL AND ENGINNERING COMPANY.

MEMBERS ARE TO BE ERECTED SO THAT MARKED END IS IN THE SAME LOCATION AS ON THE ERECTION DRAWING.

DRAWINGS PREPARED BY, GLOBAL DETAILING, INC. JOB # 12-396

print record			
1	APP	3-23	
2	FIELD	4-12	

job no. 4503
date 3-21
drawn by TC
checked by- GBI

revisions		
rev#	date	description

STEEL AND ENGINEERING COMPANY
P.O. BOX 40-539 ROUTE 422
PLATTSBURGH, N.Y. 12901
518-561-4061

customer
ENCOMPASS DEVELOP
DESIGN CONSTRUCTION

project
AKWESASNE MOHAWK HOTEL
873 STATE HIGHWAY 37
AKWESASNE, NY

sheet
E20

Global Detailing, Inc