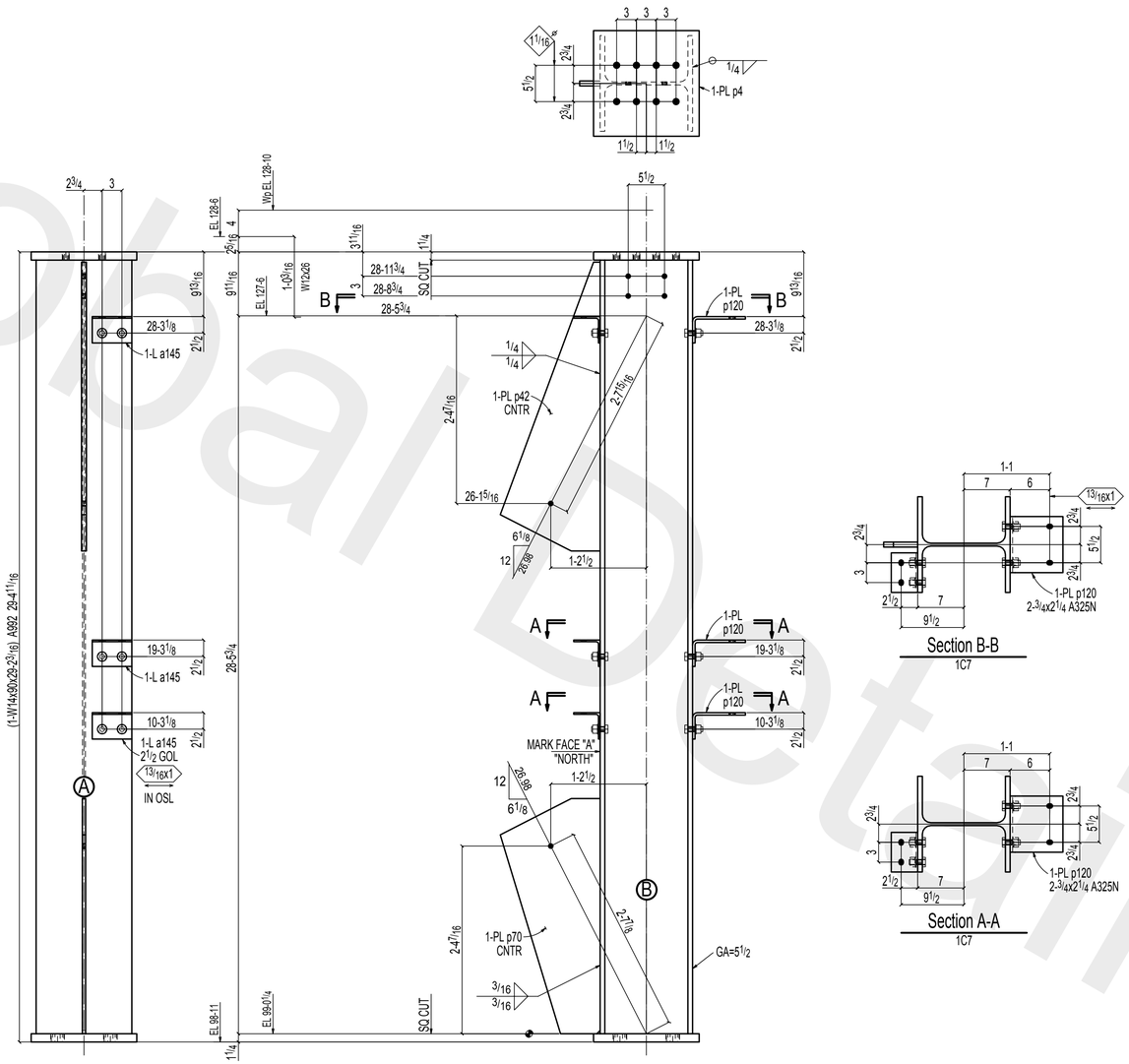

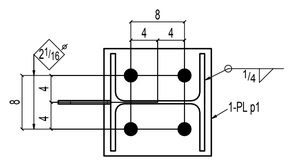

ONE COLUMN 1C7

W	14x7/16
F	14 1/2x11/16
K	2x1 1/2

AT GRID:
A

SHOP BOLTS (Unless Noted):
6-3/4x2 A325N

BILL OF MATERIAL

LIFT NO.	LIFT QTY.	NO. OF PIECES	PIECE MARK	MATERIAL	LENGTH FT.	LENGTH IN.	REMARKS	WEIGHT TOTAL	ADVANCE MILL #
1	1	ONE	1C7	COLUMN				3074	
		1	1C7	W14x90	29	2 3/16	S2E A992	2626	
		3	a145	L4x4x1/4	0	6	A36	10	
		1	p1	PL11/4x16	1	4	A36	91	
		1	p4	PL11/4x16	1	4	A36	91	
		1	p42	PL3/4x15 1/8	3	7 3/4	A36	141	
		1	p70	PL1/2x15 1/8	2	11 5/8	A36	76	
		3	p120	PL3/8x11 3/8	0	8 1/2	BENT A36	31	
		6		3/4 Dia A325N	0	2 1/4	+1HD WASH	4	
		6		3/4 Dia A325N	0	2	+1HD WASH	4	

HOLES: 13/16" DIA U.N.O.
SURFACE PREP: SSPC-SP2 (HAND TOOL)
FINSH: **1 S/C Multiprimer #94269 (Gray)**
ELECTRODES: E70XX-(LOW HYDROGEN)

GENERAL NOTES:

ALL DIMENSIONS FROM END OF MAIN MATERIAL U-N.
ALL VERTICAL SPACING OF HOLES TO BE 3" U-N.
ALL COPES TO HAVE 1/2" MINIMUM RADIUS.

CHARGES FOR CORRECTIVE WORK WILL NOT BE HONORED UNLESS PREVIOUS APPROVAL IS OBTAINED FROM JEFFORDS STEEL AND ENGINEERING COMPANY.

MEMBERS ARE TO BE ERECTED SO THAT MARKED END IS IN THE SAME LOCATION AS ON THE ERECTION DRAWING.

ON SHOP BOLTED CLIP ANGLES ON BEAMS: ON PIECE MARK END, INSERT SHOP BOLTS SO THE HEAD OF THE BOLT IS ON THE NEAR SIDE OF BEAM. ON THE NON-PIECE MARK END, INSERT BOLTS SO THE HEAD OF THE BOLT IS ON THE FAR SIDE OF BEAM.

DRAWINGS PREPARED BY:
GLOBAL DETAILING, INC.
JOB #: 14-456

Jeffords
STEEL & ENGINEERING COMPANY
P.O. BOX 40 / 4398 ROUTE #22
PLATTSBURGH, NY 12901
PH: 518-561-4061

REV	DATE	DESCRIPTION
1	Jul 2 2014	FOR FABRICATION
0	Jun 16 2014	FOR APPROVAL

drawn by: MC
checked by: TC
date: 6-2014
job no.: 4785-1000

customer: VETCO CONTRACTING SERVICE

project: BLDG 2074 SECURE HANGER FORT DRUM, NY

sheet: 1C7

PRINTED: Nov 20 2014 10:34:18 AM

Global Detailing, Inc.

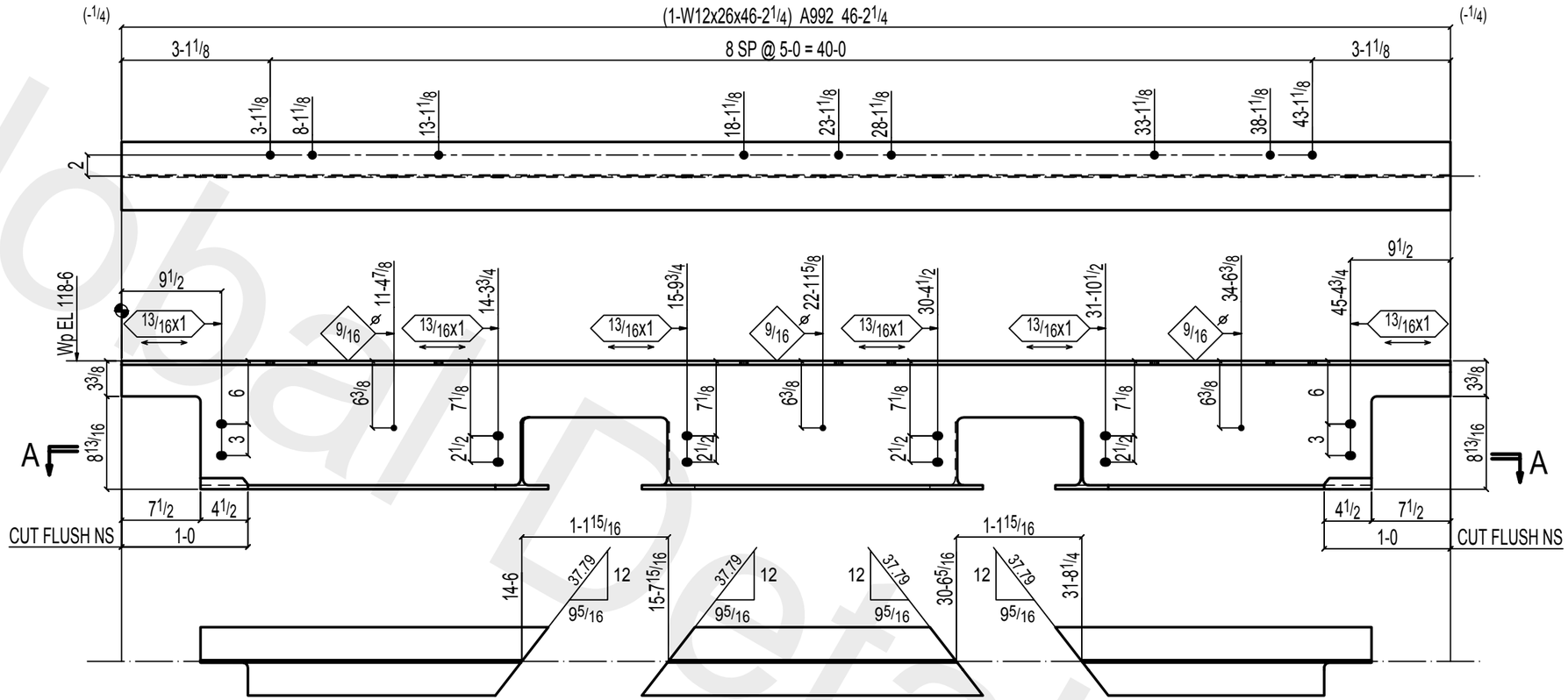

Section A-A

1G2

ONE GIRT 1G2

W	12 3/16x1/4
F	6 1/2x3/8
K	1 1/16x13/16

FIELD BOLTS:
12-3/4x1 3/4 A325N

DRAWINGS PREPARED BY,
GLOBAL DETAILING, INC.
JOB #: 14-456

BILL OF MATERIAL

LIFT NO.	LIFT QTY.	NO. OF PIECES	PIECE MARK	MATERIAL	LENGTH FT.	LENGTH IN.	REMARKS	WEIGHT TOTAL	ADVANCE MILL #
1	1	ONE	1G2	GIRT				1201	
		1	1G2	W12x26	46	2 1/4	A992	1201	
				FIELD BOLTS					
		12		3/4 Dia A325N	0	1 3/4	+1HD WASH		
									1201

HOLES: 13/16" DIA U.N.O.
SURFACE PREP: SSPC-SP2 (HAND TOOL)
FINSH: **1 S/C Multiprimer #94269 (Gray)**
ELECTRODES: E70XX-(LOW HYDROGEN)

GENERAL NOTES:

ALL DIMENSIONS FROM END OF MAIN MATERIAL U/N.
ALL VERTICAL SPACING OF HOLES TO BE 3" U/N.
ALL COPES TO HAVE 1/2" MINIMUM RADIUS.

CHARGES FOR CORRECTIVE WORK WILL NOT BE HONORED UNLESS PREVIOUS APPROVAL IS OBTAINED FROM JEFFORDS STEEL AND ENGINEERING COMPANY.

MEMBERS ARE TO BE ERECTED SO THAT MARKED END IS IN THE SAME LOCATION AS ON THE ERECTION DRAWING.

ON SHOP BOLTED CLIP ANGLES ON BEAMS: ON PIECE MARK END, INSERT SHOP BOLTS SO THE HEAD OF THE BOLT IS ON THE NEAR SIDE OF BEAM. ON THE NON-PIECE MARK END, INSERT BOLTS SO THE HEAD OF THE BOLT IS ON THE FAR SIDE OF BEAM.

Jeffords
STEEL & ENGINEERING COMPANY
P.O. BOX 40 / 4398 ROUTE #22
PLATTSBURGH, NY 12901
PH: 518-561-4061

REV	DATE	DESCRIPTION
1	Jun 27 2014	FOR FABRICATION
0	Jun 16 2014	FOR APPROVAL

drawn by: MC checked by: TC
date: 6-2014 job no.: 4785-1000

customer: VETCO CONTRACTING SERVICE

project: BLDG 2074 SECURE HANGER FORT DRUM, NY

sheet: 1G2 (1)

PRINTED: Nov 20 2014 10:35:16 AM

Global Detailing Inc

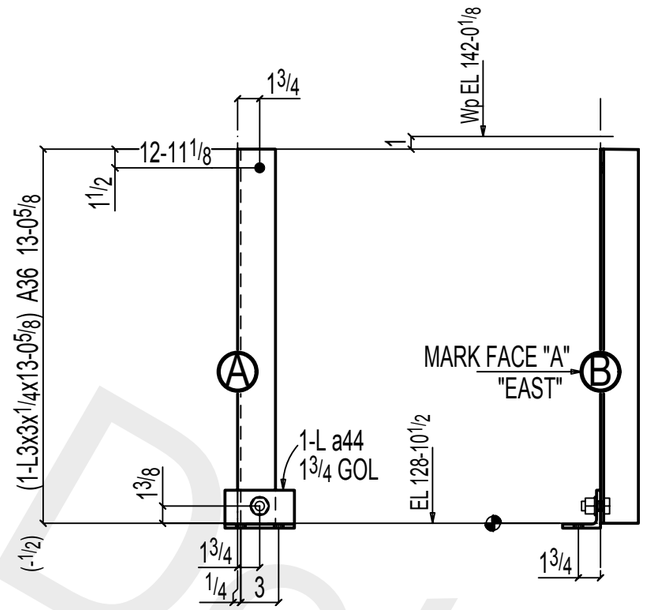

ONE HANGER 1H9

SHOP NOTE:
TOE DIRECTION NEAR SIDE

SHOP BOLTS:
1-3/4x1 3/4 A325N

FIELD BOLTS:
3-3/4x1 3/4 A325N

DRAWINGS PREPARED BY,
GLOBAL DETAILING, INC.
JOB #: 14-456

BILL OF MATERIAL

LIFT NO.	LIFT QTY.	NO. OF PIECES	PIECE MARK	MATERIAL	LENGTH FT.	LENGTH IN.	REMARKS	WEIGHT TOTAL	ADVANCE MILL #
1	1	ONE	1H9	HANGER				67	
		1	1H9	L3x3x1/4	13	0 5/8	A36	64	
		1	a44	L3x3x5/16	0	5 1/2	A36	3	
		1		3/4 Dia A325N	0	1 3/4	+1HD WASH	1	
				FIELD BOLTS					
		3		3/4 Dia A325N	0	1 3/4	+1HD WASH		
									67

HOLES: 13/16" DIA U.N.O.
SURFACE PREP: SSPC-SP2 (HAND TOOL)
FINSH: **1 S/C Multiprimer #94269 (Gray)**
ELECTRODES: E70XX-(LOW HYDROGEN)

GENERAL NOTES:

ALL DIMENSIONS FROM END OF MAIN MATERIAL U/N.
ALL VERTICAL SPACING OF HOLES TO BE 3" U/N.
ALL COPES TO HAVE 1/2" MINIMUM RADIUS.

CHARGES FOR CORRECTIVE WORK WILL NOT BE HONORED UNLESS PREVIOUS APPROVAL IS OBTAINED FROM JEFFORDS STEEL AND ENGINEERING COMPANY.

MEMBERS ARE TO BE ERECTED SO THAT MARKED END IS IN THE SAME LOCATION AS ON THE ERECTION DRAWING.

ON SHOP BOLTED CLIP ANGLES ON BEAMS: ON PIECE MARK END, INSERT SHOP BOLTS SO THE HEAD OF THE BOLT IS ON THE NEAR SIDE OF BEAM. ON THE NON-PIECE MARK END, INSERT BOLTS SO THE HEAD OF THE BOLT IS ON THE FAR SIDE OF BEAM.

Jeffords
STEEL & ENGINEERING COMPANY
P.O. BOX 40 / 4398 ROUTE #22
PLATTSBURGH, NY 12901
PH: 518-561-4061

REV	DATE	DESCRIPTION
1	Jun 27 2014	FOR FABRICATION
0	Jun 16 2014	FOR APPROVAL

drawn by: MC
checked by: TC
date: 6-2014
job no.: 4785-1000

customer: VETCO CONTRACTING SERVICE

project: BLDG 2074 SECURE HANGER
FORT DRUM, NY

sheet: 1H9 (1)

PRINTED: Nov 20 2014 10:36:41 AM

Global Detailing Inc

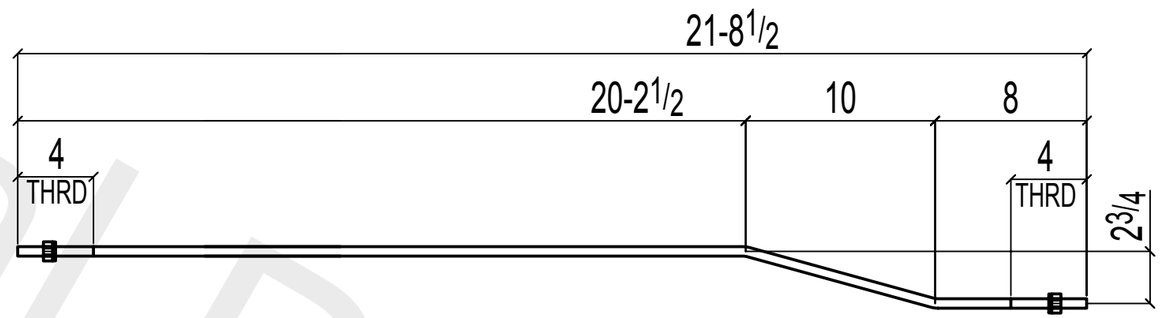

3 SAG RODS 1SR6

DRAWINGS PREPARED BY,
GLOBAL DETAILING, INC.
JOB #: 14-456

BILL OF MATERIAL

LIFT NO.	LIFT QTY.	NO. OF PIECES	PIECE MARK	MATERIAL	LENGTH FT.	LENGTH IN.	REMARKS	WEIGHT TOTAL	ADVANCE MILL #
1	3	3	1SR6	SAG ROD				44	
		3	1SR6	RB 1/2	21	8 7/8	A36	44	
		6		1/2 NUT			HHNT A563		
		6		1/2 WASHER			HD F436		
									44

HOLES: 13/16" DIA U.N.O.
SURFACE PREP: SSPC-SP2 (HAND TOOL)
FINSH: **1 S/C Multiprimer #94269 (Gray)**
ELECTRODES: E70XX-(LOW HYDROGEN)

GENERAL NOTES:

ALL DIMENSIONS FROM END OF MAIN MATERIAL U/N.
ALL VERTICAL SPACING OF HOLES TO BE 3" U/N.
ALL COPES TO HAVE 1/2" MINIMUM RADIUS.

CHARGES FOR CORRECTIVE WORK WILL NOT BE HONORED UNLESS PREVIOUS APPROVAL IS OBTAINED FROM JEFFORDS STEEL AND ENGINEERING COMPANY.

MEMBERS ARE TO BE ERECTED SO THAT MARKED END IS IN THE SAME LOCATION AS ON THE ERECTION DRAWING.

ON SHOP BOLTED CLIP ANGLES ON BEAMS: ON PIECE MARK END, INSERT SHOP BOLTS SO THE HEAD OF THE BOLT IS ON THE NEAR SIDE OF BEAM. ON THE NON-PIECE MARK END, INSERT BOLTS SO THE HEAD OF THE BOLT IS ON THE FAR SIDE OF BEAM.

Jeffords
STEEL & ENGINEERING COMPANY
P.O. BOX 40 / 4398 ROUTE #22
PLATTSBURGH, NY 12901
PH: 518-561-4061

REV	DATE	DESCRIPTION
1	Jun 27 2014	FOR FABRICATION
0	Jun 16 2014	FOR APPROVAL

drawn by: MC
checked by: TC
date: 6-2014
job no.: 4785-1000

customer: VETCO CONTRACTING SERVICE

project: BLDG 2074 SECURE HANGER FORT DRUM, NY

sheet: 1 — 1SR6

PRINTED: Nov 20 2014 10:37:09 AM

Global Detailing Inc

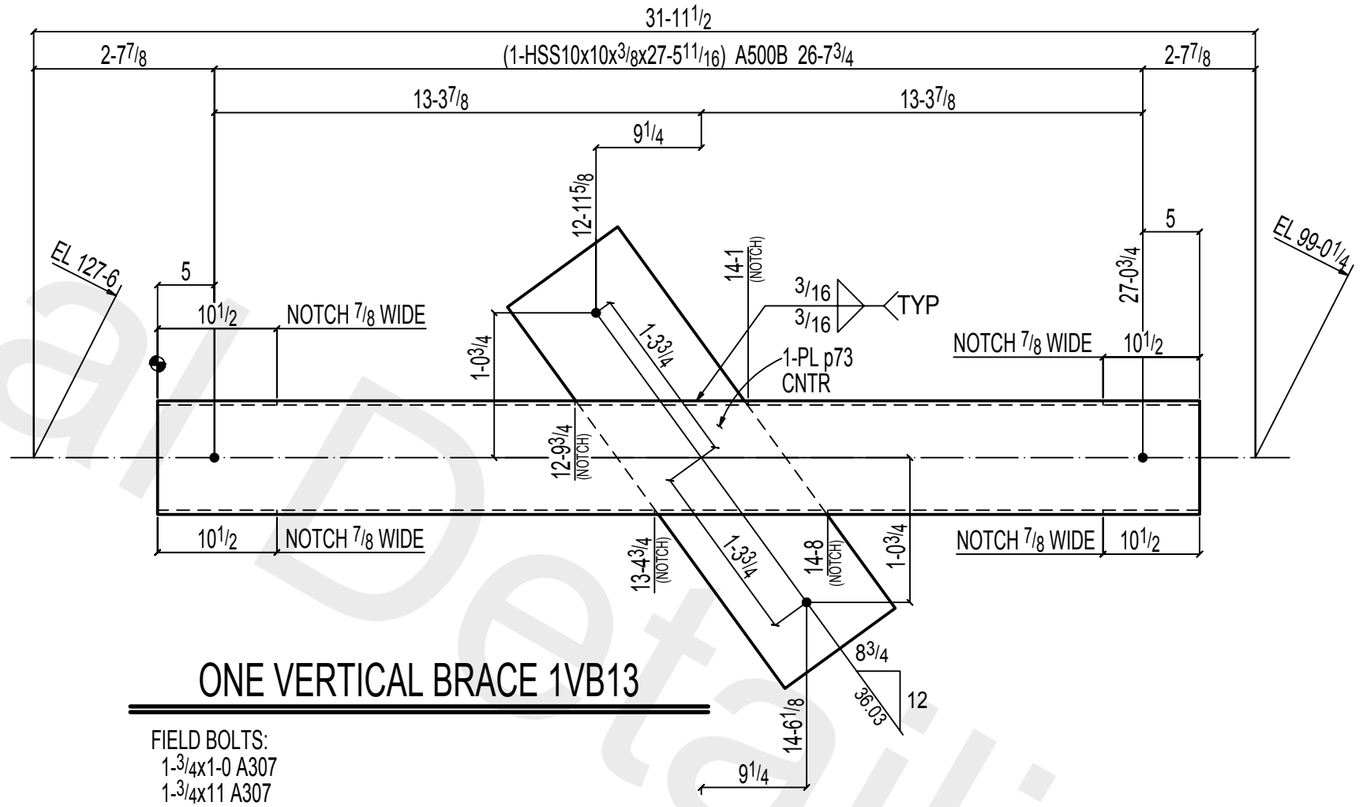

ONE VERTICAL BRACE 1VB13

FIELD BOLTS:
1-3/4x1-0 A307
1-3/4x11 A307

DRAWINGS PREPARED BY, GLOBAL DETAILING, INC.
JOB #: 14-456

BILL OF MATERIAL

LIFT NO.	LIFT QTY.	NO. OF PIECES	PIECE MARK	MATERIAL	LENGTH FT.	LENGTH IN.	REMARKS	WEIGHT TOTAL	ADVANCE MILL #
1	1	ONE	1VB13	VERTICAL BRACE				1420	
		1	1VB13	HSS10x10x3/8	27	5 11/16	A500B	1314	
		1	p73	PL3/4x12	3	5 1/2	A36	106	
				FIELD BOLTS					
		1		3/4 Dia A307	1	0			
		1		3/4 Dia A307	0	11			
									1420

HOLES: 13/16" DIA U.N.O.
SURFACE PREP: SSPC-SP2 (HAND TOOL)
FINSH: **1 S/C Multiprimer #94269 (Gray)**
ELECTRODES: E70XX-(LOW HYDROGEN)

GENERAL NOTES:

ALL DIMENSIONS FROM END OF MAIN MATERIAL U/N.
ALL VERTICAL SPACING OF HOLES TO BE 3" U/N.
ALL COPES TO HAVE 1/2" MINIMUM RADIUS.

CHARGES FOR CORRECTIVE WORK WILL NOT BE HONORED UNLESS PREVIOUS APPROVAL IS OBTAINED FROM JEFFORDS STEEL AND ENGINEERING COMPANY.

MEMBERS ARE TO BE ERECTED SO THAT MARKED END IS IN THE SAME LOCATION AS ON THE ERECTION DRAWING.

ON SHOP BOLTED CLIP ANGLES ON BEAMS: ON PIECE MARK END, INSERT SHOP BOLTS SO THE HEAD OF THE BOLT IS ON THE NEAR SIDE OF BEAM. ON THE NON-PIECE MARK END, INSERT BOLTS SO THE HEAD OF THE BOLT IS ON THE FAR SIDE OF BEAM.

Jeffords
STEEL & ENGINEERING COMPANY
P.O. BOX 40 / 4398 ROUTE #22
PLATTSBURGH, NY 12901
PH: 518-561-4061

REV	DATE	DESCRIPTION
1	Jun 27 2014	FOR FABRICATION
0	Jun 16 2014	FOR APPROVAL

drawn by: MC
date: 6-2014
checked by: GDI
job no.: 4785-1000

customer: VETCO CONTRACTING SERVICE

project: BLDG 2074 SECURE HANGER FORT DRUM, NY

sheet: 1VB13 (1)

PRINTED: Nov 20 2014 10:39:29 AM

Global Detailing Inc

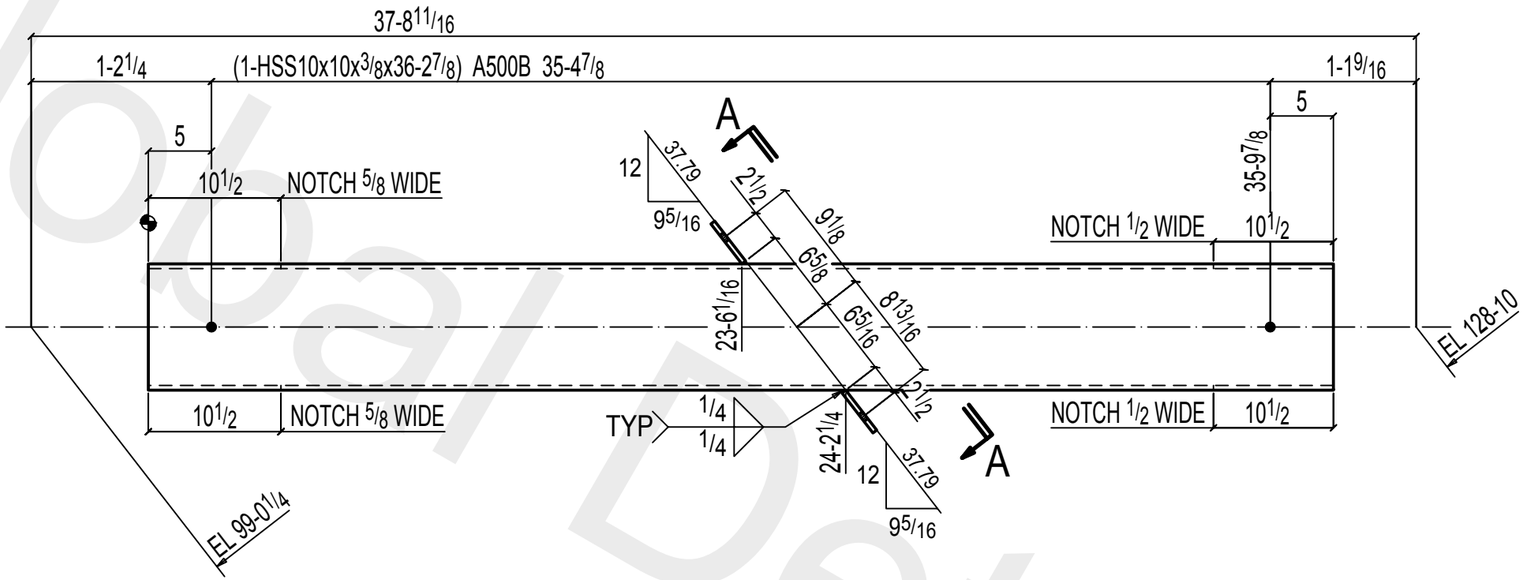

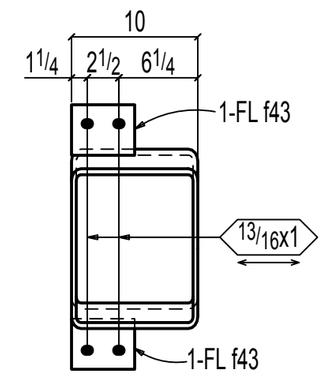

Section A-A
1VB15

ONE VERTICAL BRACE 1VB15

FIELD BOLTS:
2-3/4x11 A307

DRAWINGS PREPARED BY,
GLOBAL DETAILING, INC.
JOB #: 14-456

BILL OF MATERIAL

LIFT NO.	LIFT QTY.	NO. OF PIECES	PIECE MARK	MATERIAL	LENGTH FT.	LENGTH IN.	REMARKS	WEIGHT TOTAL	ADVANCE MILL #
1	1	ONE	1VB15	VERTICAL BRACE				1737	
		1	1VB15	HSS10x10x3/8	36	2 7/8	A500B	1733	
		2	f43	FB3/8x4	0	5	A36	4	
				FIELD BOLTS					
		2		3/4 Dia A307	0	11			
									1737

HOLES: 13/16" DIA U.N.O.
SURFACE PREP: SSPC-SP2 (HAND TOOL)
FINSH: **1 S/C Multiprimer #94269 (Gray)**
ELECTRODES: E70XX-(LOW HYDROGEN)

GENERAL NOTES:

ALL DIMENSIONS FROM END OF MAIN MATERIAL U/N.
ALL VERTICAL SPACING OF HOLES TO BE 3" U/N.
ALL COPES TO HAVE 1/2" MINIMUM RADIUS.

CHARGES FOR CORRECTIVE WORK WILL NOT BE HONORED UNLESS PREVIOUS APPROVAL IS OBTAINED FROM JEFFORDS STEEL AND ENGINEERING COMPANY.

MEMBERS ARE TO BE ERECTED SO THAT MARKED END IS IN THE SAME LOCATION AS ON THE ERECTION DRAWING.

ON SHOP BOLTED CLIP ANGLES ON BEAMS: ON PIECE MARK END, INSERT SHOP BOLTS SO THE HEAD OF THE BOLT IS ON THE NEAR SIDE OF BEAM. ON THE NON-PIECE MARK END, INSERT BOLTS SO THE HEAD OF THE BOLT IS ON THE FAR SIDE OF BEAM.

Jeffords
STEEL & ENGINEERING COMPANY
P.O. BOX 40 / 4398 ROUTE #22
PLATTSBURGH, NY 12901
PH: 518-561-4061

REV	DATE	DESCRIPTION
1	Jun 27 2014	FOR FABRICATION
0	Jun 20 2014	FOR APPROVAL

drawn by: MC
date: 6-2014
checked by: GDI
job no.: 4785-1000

customer: VETCO CONTRACTING SERVICE

project: BLDG 2074 SECURE HANGER FORT DRUM, NY

sheet: 1 — 1VB15

PRINTED: Nov 20 2014 10:39:47 AM

Global Detailing Inc

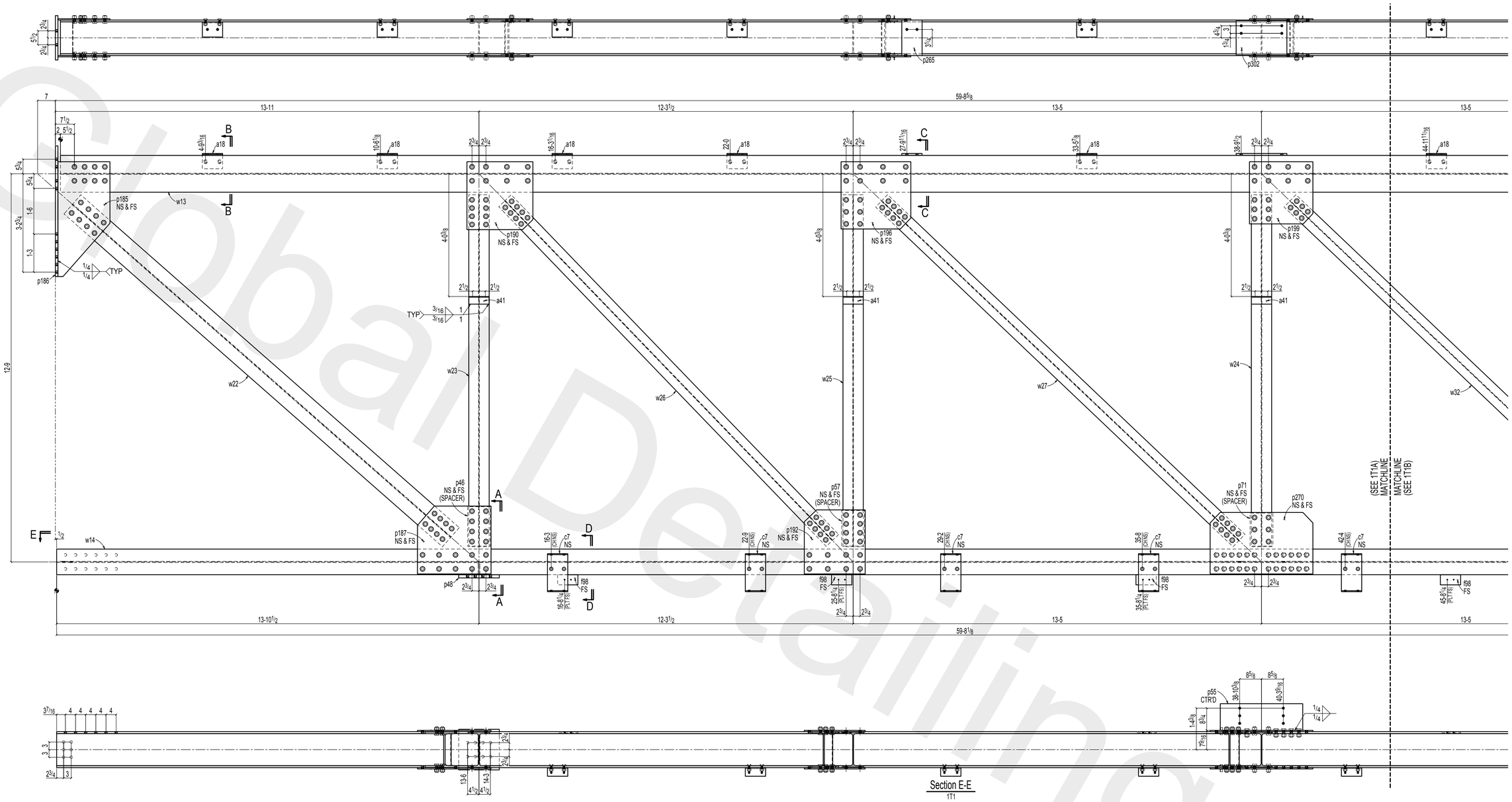

ONE TRUSS 1T1

BILL OF MATERIAL

LIFT NO.	LIFT QTY.	NO. OF PIECES	PIECE MARK	MATERIAL	LENGTH FT.	LENGTH IN.	REMARKS	WEIGHT TOTAL	ADVANCE MILL #
		ONE	1T1	TRUSS				18133	
		1	w13	W14x90	59	6 5/8	A992	5360	
		8	a18	L6x6x3/8	0	8	A36	79	
		1	p186	PL1x17 1/2	4	3 1/2	A36	256	
		1	p302	PL3/4x13 1/2	1	8	A36	57	
		1	p265	PL3/4x8	1	2	A36	24	
		2	p196	PL1/2x26 1/2	2	3 1/2	A36	207	
		2	p190	PL1/2x26	2	2 3/4	A36	197	
		2	p199	PL1/2x24 1/2	2	1	A36	174	
		2	p201	PL1/2x22	1	10 1/4	A36	139	
		2	p185	PL1/2x20 1/2	3	9 1/4	A36	263	
		1	p266	PL1/2x12	3	4 1/4	A36	68	
		1	w14	W14x74	59	8 1/8	A992	4416	
		7	c7	C15x33.9	0	8	A36	158	
		1	p48	PL11/4x16	1	4	A36	91	
		1	p86	PL3/4x4 3/4	1	0 1/2	A36	13	
		2	p187	PL1/2x26 3/4	2	5	A36	220	
		2	p270	PL1/2x24 1/4	3	4 1/2	A36	278	
		2	p192	PL1/2x24	2	1 1/4	A36	172	
		2	p200	PL1/2x22	1	10 1/4	A36	139	
		1	p55	PL1/2x10 1/2	2	8 1/2	A36	48	
		1	p264	PL1/2x10	3	4 1/4	A36	57	
		5	f98	FB1/2x4	0	8	A36	23	
		1	w45	W14x30	7	11 1/4	A992	238	
		1	p85	PL1/2x7	1	4 1/4	A36	16	
		1	w22	W14x61	16	6 11/16	A992	1010	
		1	w23	W14x48	11	6 3/4	A992	555	
		4	a41	L3x3x1/4	0	8	A36	13	

BILL OF MATERIAL

LIFT NO.	LIFT QTY.	NO. OF PIECES	PIECE MARK	MATERIAL	LENGTH FT.	LENGTH IN.	REMARKS	WEIGHT TOTAL	ADVANCE MILL #
		2	p46	PL3/16x9	1	3 1/2	A36	15	
		1	w24	W14x43	11	6 3/4	A992	497	
		2	p71	PL11/4x9	1	1	A36	17	
		1	w25	W14x43	11	6 3/4	A992	497	
		2	p57	PL11/4x9	1	2	A36	18	
		1	w26	W14x38	15	6	A992	589	
		1	w27	W14x38	16	2 3/8	A992	615	
		1	w28	W14x34	11	6 3/4	A992	393	
		1	w32	W14x30	16	2 3/8	A992	486	
		2	p133	PL3/16x7	0	9 1/2	A36	7	
		268		1 Dia A325SC	0	2 1/2	+1HD WASH	391	
		16		1 Dia A325SC	0	2 1/4	+1HD WASH	22	
		30		3/4 Dia A325N	0	2 1/4	+1HD WASH	20	
		8		1 Dia A325SC	0	4	+1HD WASH	14	
		184		1 Dia A325SC	0	2 3/4	+1HD WASH	279	
		1		1 Dia A325SC	0	2 1/2	1HD WASH	1	
				FIELD BOLTS					
			20	1 Dia A490SC	0	3	+1HD WASH		
			24	1 Dia A325SC	0	2 1/2	+1HD WASH		
			12	1 Dia A325SC	0	2 3/4	+1HD WASH		
			6	TC 1 Dia A325SC	0	2 1/4	+1HD WASH		

BILL OF MATERIAL

LIFT NO.	LIFT QTY.	NO. OF PIECES	PIECE MARK	MATERIAL	LENGTH FT.	LENGTH IN.	REMARKS	WEIGHT TOTAL	ADVANCE MILL #

WORK WITH SHEETS
1T1A & 1T1B

DRAWINGS PREPARED BY:
GLOBAL DETAILING, INC.
JOB #: 14-456

HOLES: 13/16" DIA U.N.O.
SURFACE PREP: SSPC-SP2 (HAND TOOL)
FINISH: **1 S/C Multiprimer #94269 (Gray)**
ELECTRODES: E70XX-(LOW HYDROGEN)

GENERAL NOTES:

ALL DIMENSIONS FROM END OF MAIN MATERIAL U/N.
ALL VERTICAL SPACING OF HOLES TO BE 3" U/N.
ALL COPES TO HAVE ½" MINIMUM RADIUS.

CHANGES FOR CORRECTIVE WORK WILL NOT BE HONORED UNLESS PREVIOUS APPROVAL IS OBTAINED FROM JEFFORDS STEEL AND ENGINEERING COMPANY.

MEMBERS ARE TO BE ERECTED SO THAT MARKED END IS IN THE SAME LOCATION AS ON THE ERECTION DRAWING.

ON SHOP BOLTED CLIP ANGLES ON BEAMS: ON PIECE MARK END, INSERT SHOP BOLTS SO THE HEAD OF THE BOLT IS ON THE NEAR SIDE OF BEAM. ON THE NON-PIECE MARK END, INSERT BOLTS SO THE HEAD OF THE BOLT IS ON THE FAR SIDE OF BEAM.

Jeffords
STEEL & ENGINEERING COMPANY
P.O. BOX 40 / 4398 ROUTE #22
PLATTSBURGH, NY 12901
PH: 518-561-4061

customer: VETCO CONTRACTING SERVICE

project: BLDG 2074 SECURE HANGER FORT DRUM, NY

sheet: 1T1A

REV	DATE	DESCRIPTION
1	Jul 15 2014	FOR FABRICATION
0	Jun 20 2014	FOR APPROVAL

drawn by: MC
checked by: TC
date: 6-2014
job no.: 4785-1000

PRINTED: Nov 20 2014 10:37:32 AM

Global Detailing, Inc

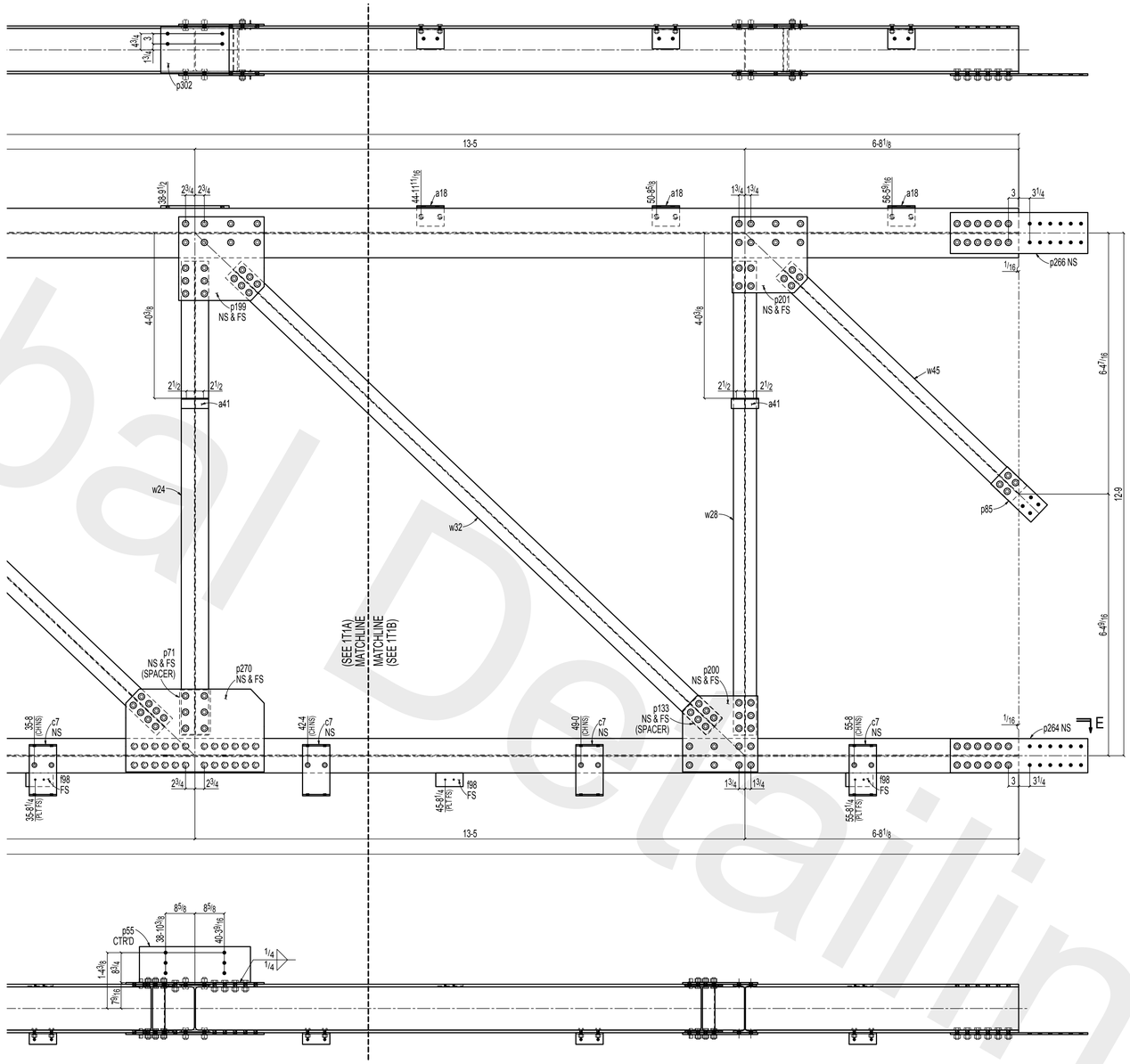

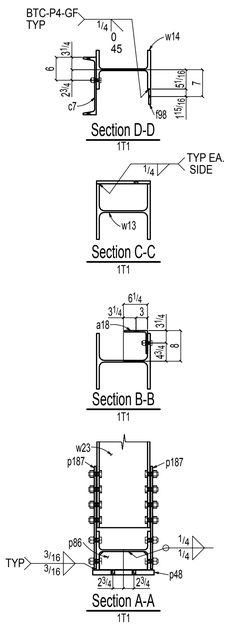

BILL OF MATERIAL

LIFT NO.	LIFT QTY.	NO. OF PIECES	PIECE MARK	MATERIAL	LENGTH FT. IN.	REMARKS	WEIGHT TOTAL	ADVANCE MILL #

BILL OF MATERIAL

LIFT NO.	LIFT QTY.	NO. OF PIECES	PIECE MARK	MATERIAL	LENGTH FT. IN.	REMARKS	WEIGHT TOTAL	ADVANCE MILL #

BILL OF MATERIAL

LIFT NO.	LIFT QTY.	NO. OF PIECES	PIECE MARK	MATERIAL	LENGTH FT. IN.	REMARKS	WEIGHT TOTAL	ADVANCE MILL #

WORK WITH SHEETS
1T1A & 1T1B

HOLES: 13/16" DIA U.N.O.
SURFACE PREP: SSPC-SP2 (HAND TOOL)
FINSH: **1 S/C Multiprimer #94269 (Gray)**
ELECTRODES: E70XX-(LOW HYDROGEN)

GENERAL NOTES:

ALL DIMENSIONS FROM END OF MAIN MATERIAL U/N.
ALL VERTICAL SPACING OF HOLES TO BE 3" U/N.
ALL COPES TO HAVE ½" MINIMUM RADIUS.

CHANGES FOR CORRECTIVE WORK WILL NOT BE HONORED UNLESS PREVIOUS APPROVAL IS OBTAINED FROM JEFFORDS STEEL AND ENGINEERING COMPANY.

MEMBERS ARE TO BE ERECTED SO THAT MARKED END IS IN THE SAME LOCATION AS ON THE ERECTION DRAWING.

ON SHOP BOLTED CLIP ANGLES ON BEAMS: ON PIECE MARK END, INSERT SHOP BOLTS SO THE HEAD OF THE BOLT IS ON THE NEAR SIDE OF BEAM. ON THE NON-PIECE MARK END, INSERT BOLTS SO THE HEAD OF THE BOLT IS ON THE FAR SIDE OF BEAM.

DRAWINGS PREPARED BY
GLOBAL DETAILING, INC.
JOB #: 14-456

Jeffords
STEEL & ENGINEERING COMPANY
P.O. BOX 40 / 4398 ROUTE #22
PLATTSBURGH, NY 12901
PH: 518-561-4061

REV	DATE	DESCRIPTION
1	Jul 15 2014	FOR FABRICATION
0	Jun 20 2014	FOR APPROVAL

drawn by: MC
checked by: TC
date: 6-2014
job no.: 4785-1000

customer: VETCO CONTRACTING SERVICE

project: BLDG 2074 SECURE HANGER FORT DRUM, NY

sheet: 1T1B

PRINTED: Nov 20 2014 10:37:45 AM

Global Detailing, Inc

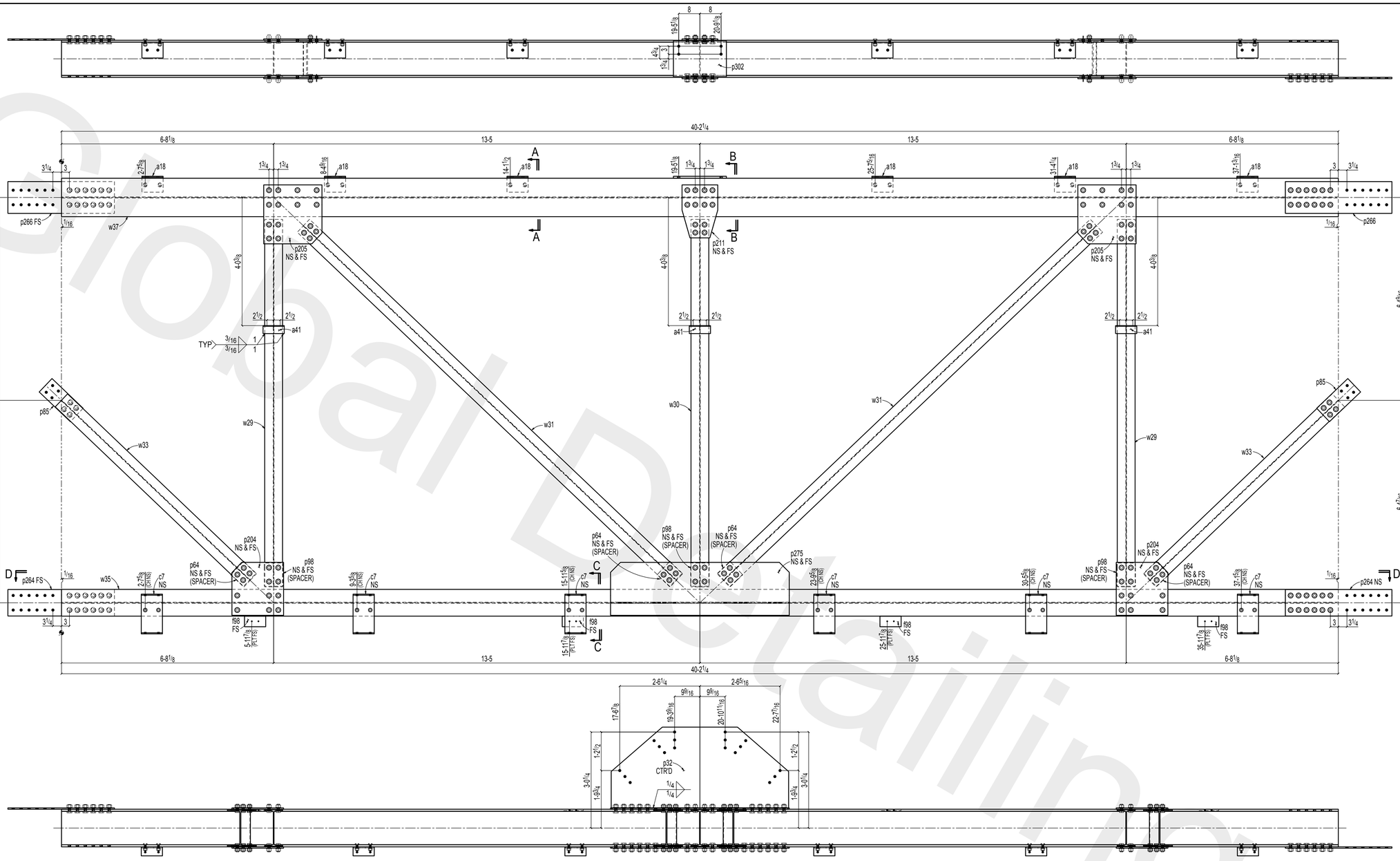

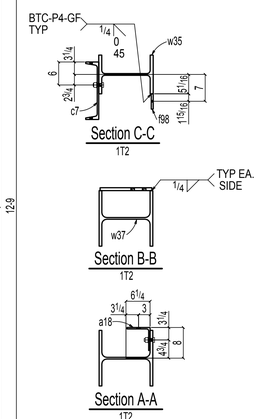

BILL OF MATERIAL

LIFT NO.	LIFT QTY.	NO. OF PIECES	PIECE MARK	MATERIAL	LENGTH FT.	LENGTH IN.	REMARKS	WEIGHT TOTAL	ADVANCE MILL #
		ONE	1T2	TRUSS				11466	
		1	w37	W14x90	40	2 1/4	A992	3617	
		6	a18	L6x6x3/8	0	8	A36	60	
		1	p302	PL 3/4x13 1/2	1	8	A36	57	
		4	p205	PL 1/2x22	1	10 1/4	A36	278	
		2	p211	PL 1/2x13 1/2	1	8	A36	77	
		2	p266	PL 1/2x12	3	4 1/4	A36	137	
		2	w29	W14x30	11	6 3/4	A992	694	
		3	a41	L3x3x1/4	0	8	A36	10	
		6	p98	PL 3/16x7	0	6 3/4	A36	20	
		1	w30	W14x30	11	6 3/4	A992	347	
		2	w31	W14x30	16	2 3/8	A992	972	
		8	p64	PL 3/16x6 1/2	0	7	A36	19	
		2	w33	W14x30	8	2 1/2	A992	492	
		2	p85	PL 1/2x7	1	4 1/4	A36	32	
		1	w35	W14x74	40	2 1/4	A992	2974	
		6	c7	C15x33.9	0	8	A36	136	
		1	p32	PL 1/2x30 1/2	5	7	A36	290	
		2	p275	PL 1/2x20	5	7 1/2	A36	383	
		4	p204	PL 1/2x19 1/2	1	8	A36	221	
		2	p264	PL 1/2x10	3	4 1/4	A36	114	
		4	f98	FB 1/2x4	0	8	A36	18	
		180		1 Dia A325SC	0	2 1/2	+1HD WASH	262	
		24		3/4 Dia A325N	0	2 1/4	+1HD WASH	16	
		12		1 Dia A325SC	0	2 1/4	+1HD WASH	17	
		148		1 Dia A325SC	0	2 3/4	+1HD WASH	224	
				FIELD BOLTS					

BILL OF MATERIAL

LIFT NO.	LIFT QTY.	NO. OF PIECES	PIECE MARK	MATERIAL	LENGTH FT.	LENGTH IN.	REMARKS	WEIGHT TOTAL	ADVANCE MILL #
		12		1 Dia A325SC	0	2 1/2	+1HD WASH		
		4		1 Dia A325SC	0	2 1/4	+1HD WASH		
		12		1 Dia A325SC	0	2 3/4	+1HD WASH		

HOLES: 13/16" DIA U.N.O.
SURFACE PREP: SSPC-SP2 (HAND TOOL)
FINSH: **1 S/C Multiprimer #94269 (Gray)**
ELECTRODES: E70XX-(LOW HYDROGEN)

GENERAL NOTES:

ALL DIMENSIONS FROM END OF MAIN MATERIAL U/N.
ALL VERTICAL SPACING OF HOLES TO BE 3" U/N.
ALL COPES TO HAVE 5/8" MINIMUM RADIUS.

CHANGES FOR CORRECTIVE WORK WILL NOT BE HONORED UNLESS PREVIOUS APPROVAL IS OBTAINED FROM JEFFORDS STEEL AND ENGINEERING COMPANY.

MEMBERS ARE TO BE ERECTED SO THAT MARKED END IS IN THE SAME LOCATION AS ON THE ERECTION DRAWING.

ON SHOP BOLTED CLIP ANGLES ON BEAMS: ON PIECE MARK END, INSERT SHOP BOLTS SO THE HEAD OF THE BOLT IS ON THE NEAR SIDE OF BEAM. ON THE NON-PIECE MARK END, INSERT BOLTS SO THE HEAD OF THE BOLT IS ON THE FAR SIDE OF BEAM.

DRAWINGS PREPARED BY: GLOBAL DETAILING, INC. JOB #: 14-456

Jeffords
STEEL & ENGINEERING COMPANY
P.O. BOX 40 / 4398 ROUTE #22
PLATTSBURGH, NY 12901
PH: 518-561-4061

REV	DATE	DESCRIPTION
1	Jul 15 2014	FOR FABRICATION
0	Jun 20 2014	FOR APPROVAL

drawn by: MC checked by: TC
date: 6-2014 job no.: 4785-1000

customer: VETCO CONTRACTING SERVICE

project: BLDG 2074 SECURE HANGER FORT DRUM, NY

sheet: 1T2

PRINTED: Nov 20 2014 10:37:58 AM

Global Detailing, Inc

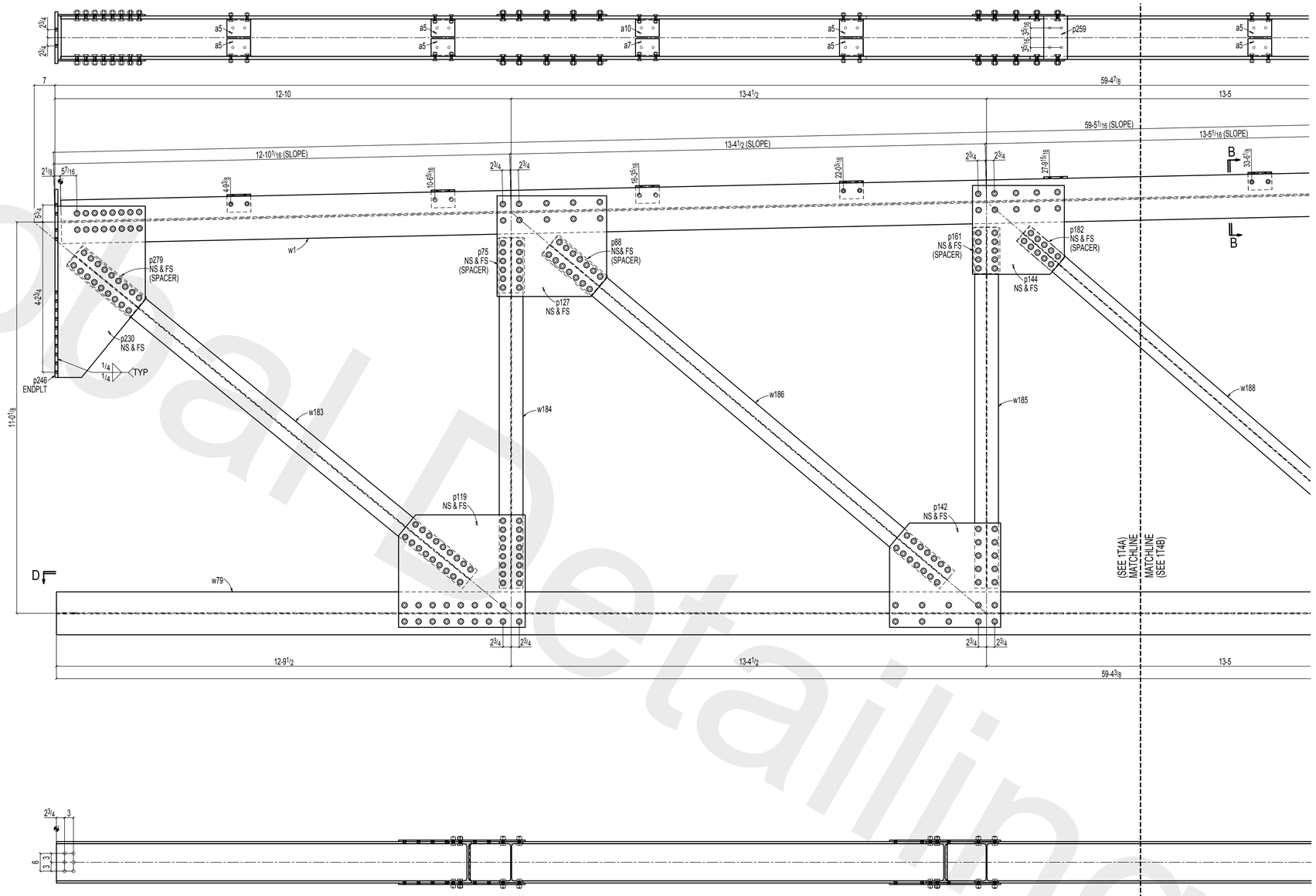

Section D-D
1T6

ONE TRUSS 1T4

BILL OF MATERIAL

LIFT NO.	LIFT QTY.	NO. OF PIECES	PIECE MARK	MATERIAL	LENGTH FT. IN.	REMARKS	WEIGHT TOTAL	ADVANCE MILL #
		ONE 1T4		TRUSS			23881	
		1	w79	W14x90	59 4 3/8	A992	5343	
		1	p29	PL 1/2x12	7 4 1/4	A572-50	375	
		2	p119	PL 1/2x38	3 6 3/4	A36	461	
		2	p142	PL 1/2x35 1/4	3 1 1/2	A36	375	
		2	p97	PL 1/2x30	5 6	A36	561	
		2	p155	PL 1/2x29	5 6	A36	543	
		2	p166	PL 1/2x26 1/4	2 3 1/2	A36	205	
		1	w1	W14x132	59 2 15/16	A992	7820	
		12	a5	L6x6x3/8	0 8	A36	119	
		1	a7	L6x6x3/8	0 8	A36	10	
		1	a10	L6x6x3/8	0 8	A36	10	
		1	p37	PL 1/4x12	8 4 1/4	A572-50	426	
		1	p246	PL 1x17 1/2	5 3 1/2	A36	315	
		1	p332	PL 3/4x14 3/16	1 8	A36	60	
		2	p259	PL 5/8x6	1 2 11/16	A36	42	
		2	p127	PL 1/2x34	3 1	A36	357	
		2	p144	PL 1/2x30	2 7	A36	264	
		2	p230	PL 1/2x29 1/2	4 9 7/8	A36	484	
		2	p153	PL 1/2x27	2 4 1/2	A36	218	
		2	p169	PL 1/2x24 1/2	2 1	A36	174	
		1	w181	W14x30	7 3 5/16	A992	218	
		1	p23	PL 1/2x7	1 10 1/4	A36	22	
		2	p241	PL 7/16x7	0 9 1/2	A36	16	
		1	w183	W14x53	14 4 11/16	A992	763	
		2	p279	PL 3/8x9	2 3 1/2	A36	53	
		1	w184	W14x48	9 10 1/2	A992	474	
		2	p75	PL 7/16x9	1 6 1/2	A36	41	

BILL OF MATERIAL

LIFT NO.	LIFT QTY.	NO. OF PIECES	PIECE MARK	MATERIAL	LENGTH FT. IN.	REMARKS	WEIGHT TOTAL	ADVANCE MILL #
		1	w186	W14x43	14 7 5/16	A992	629	
		2	p88	PL 1/2x9	1 9 1/2	A36	55	
		1	w187	W14x43	10 5 1/2	A992	450	
		2	p220	PL 1/2x9	1 0 1/2	A36	32	
		1	w188	W14x38	14 11 15/16	A992	570	
		2	p182	PL 1/4x7	1 3 1/2	A36	15	
		1	w192	W14x30	15 2 1/2	A992	456	
		2	p223	PL 7/16x7	1 0 1/2	A36	22	
		1	w185	W14x43	10 2	A992	437	
		2	p161	PL 1/2x9	1 3 1/2	A36	40	
		1	w189	W14x34	10 9	A992	366	
		2	p240	PL 5/16x7	0 11	A36	14	
		26		1 Dia A325SC	0 3 1/2	+1HD WASH	47	
		304		1 Dia A325SC	0 2 1/2	+1HD WASH	443	
		32		1 Dia A325SC	0 3 3/4	+1HD WASH	56	
		228		1 Dia A325SC	0 3	+1HD WASH	358	
		60		1 Dia A325SC	0 2 3/4	+1HD WASH	91	
		28		3/4 Dia A325N	0 2 1/2	+1HD WASH	20	
		22		1 Dia A325SC	0 2 1/4	+1HD WASH	31	
		1		1 Dia A325SC	0 3 1/4	1HD WASH	2	
				FIELD BOLTS				
		26		1 Dia A325SC	0 3 1/2	+1HD WASH		
		12		1 Dia A325SC	0 2 1/4	+1HD WASH		
		32		1 Dia A325SC	0 3 3/4	+1HD WASH		
		28		1 Dia A490SC	0 3	+1HD WASH		

BILL OF MATERIAL

LIFT NO.	LIFT QTY.	NO. OF PIECES	PIECE MARK	MATERIAL	LENGTH FT. IN.	REMARKS	WEIGHT TOTAL	ADVANCE MILL #

WORK WITH SHEETS
1T4A & 1T4B

HOLES: 13/16" DIA U.N.O.
SURFACE PREP: SSPC-SP2 (HAND TOOL)
FINSH: **1 S/C Multiprimer #94269 (Gray)**
ELECTRODES: E70XX-(LOW HYDROGEN)

GENERAL NOTES:

ALL DIMENSIONS FROM END OF MAIN MATERIAL U/N.
ALL VERTICAL SPACING OF HOLES TO BE 3" U/N.
ALL COPES TO HAVE 1/2" MINIMUM RADIUS.

CHANGES FOR CORRECTIVE WORK WILL NOT BE HONORED UNLESS PREVIOUS APPROVAL IS OBTAINED FROM JEFFORDS STEEL AND ENGINEERING COMPANY.

MEMBERS ARE TO BE ERECTED SO THAT MARKED END IS IN THE SAME LOCATION AS ON THE ERECTION DRAWING.

ON SHOP BOLTED CLIP ANGLES ON BEAMS: ON PIECE MARK END, INSERT SHOP BOLTS SO THE HEAD OF THE BOLT IS ON THE NEAR SIDE OF BEAM. ON THE NON-PIECE MARK END, INSERT BOLTS SO THE HEAD OF THE BOLT IS ON THE FAR SIDE OF BEAM.

DRAWINGS PREPARED BY: GLOBAL DETAILING, INC. JOB #: 14-456

Jeffords
STEEL & ENGINEERING COMPANY
P.O. BOX 40 / 4398 ROUTE #22
PLATTSBURGH, NY 12901
PH: 518-561-4061

REV	DATE	DESCRIPTION
1	Jul 11 2014	FOR FABRICATON
0	Jun 20 2014	FOR APPROVAL

drawn by: MC checked by: TC
date: 6-2014 job no.: 4785-1000

customer: VETCO CONTRACTING SERVICE

project: BLDG 2074 SECURE HANGER FORT DRUM, NY

sheet: 1T4A

PRINTED: Nov 20 2014 10:38:31 AM

Global Detailing, Inc

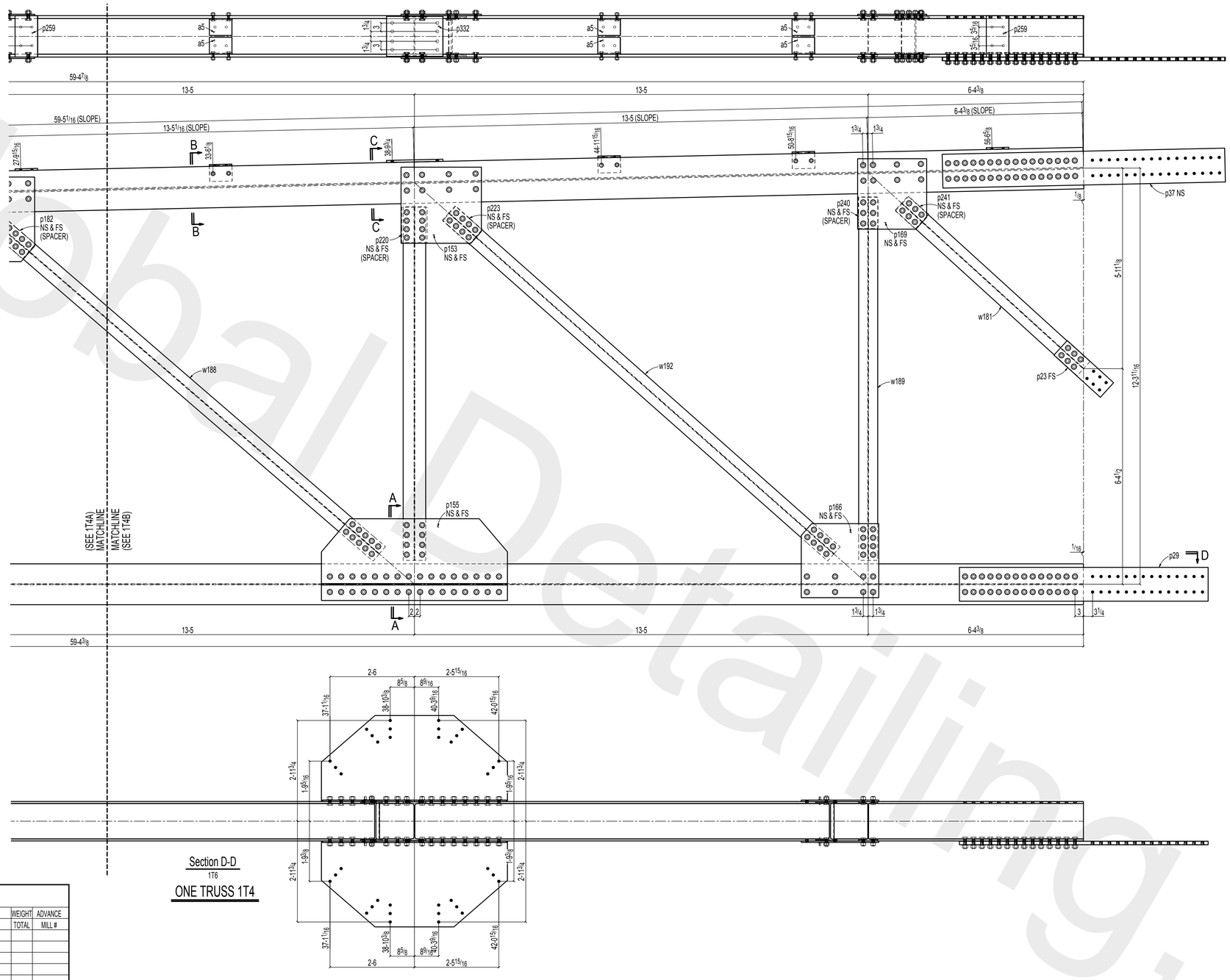

Section D-D
1T6

ONE TRUSS 1T4

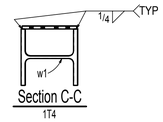

Section C-C
1T4

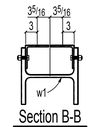

Section B-B
1T4

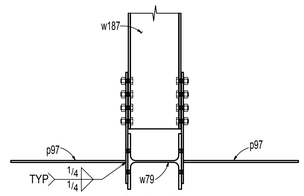

Section A-A
1T4

BILL OF MATERIAL

LIFT NO.	LIFT QTY.	NO. OF PIECES	PIECE MARK	MATERIAL	LENGTH FT. IN.	REMARKS	WEIGHT TOTAL	ADVANCE MILL #

WORK WITH SHEETS
1T4A & 1T4B

HOLES: 13/16" DIA U.N.O.
SURFACE PREP: SSPC-SP2 (HAND TOOL)
FINSH: **1 S/C Multiprimer #94269 (Gray)**
ELECTRODES: E70XX-(LOW HYDROGEN)

GENERAL NOTES:

ALL DIMENSIONS FROM END OF MAIN MATERIAL U/N.
ALL VERTICAL SPACING OF HOLES TO BE 3" U/N.
ALL COPES TO HAVE 1/8" MINIMUM RADIUS.

CHANGES FOR CORRECTIVE WORK WILL NOT BE HONORED UNLESS PREVIOUS APPROVAL IS OBTAINED FROM JEFFORDS STEEL AND ENGINEERING COMPANY.

MEMBERS ARE TO BE ERECTED SO THAT MARKED END IS IN THE SAME LOCATION AS ON THE ERECTION DRAWING.

ON SHOP BOLTED CLIP ANGLES ON BEAMS: ON PIECE MARK END, INSERT SHOP BOLTS SO THE HEAD OF THE BOLT IS ON THE NEAR SIDE OF BEAM. ON THE NON-PIECE MARK END, INSERT BOLTS SO THE HEAD OF THE BOLT IS ON THE FAR SIDE OF BEAM.

DRAWINGS PREPARED BY:
GLOBAL DETAILING, INC.
JOB #: 14-455

Jeffords
STEEL & ENGINEERING COMPANY
P.O. BOX 40 / 4398 ROUTE #22
PLATTSBURGH, NY 12901
PH: 518-561-4061

REV	DATE	DESCRIPTION
1	Jul 11 2014	FOR FABRICATON
0	Jun 20 2014	FOR APPROVAL

drawn by: MC
date: 6-2014
checked by: TC
job no.: 4785-1000

customer: VETCO CONTRACTING SERVICE

project: BLDG 2074 SECURE HANGER FORT DRUM, NY

sheet: 1T4B

PRINTED: Nov 20 2014 10:38:39 AM

Global Detailing, Inc