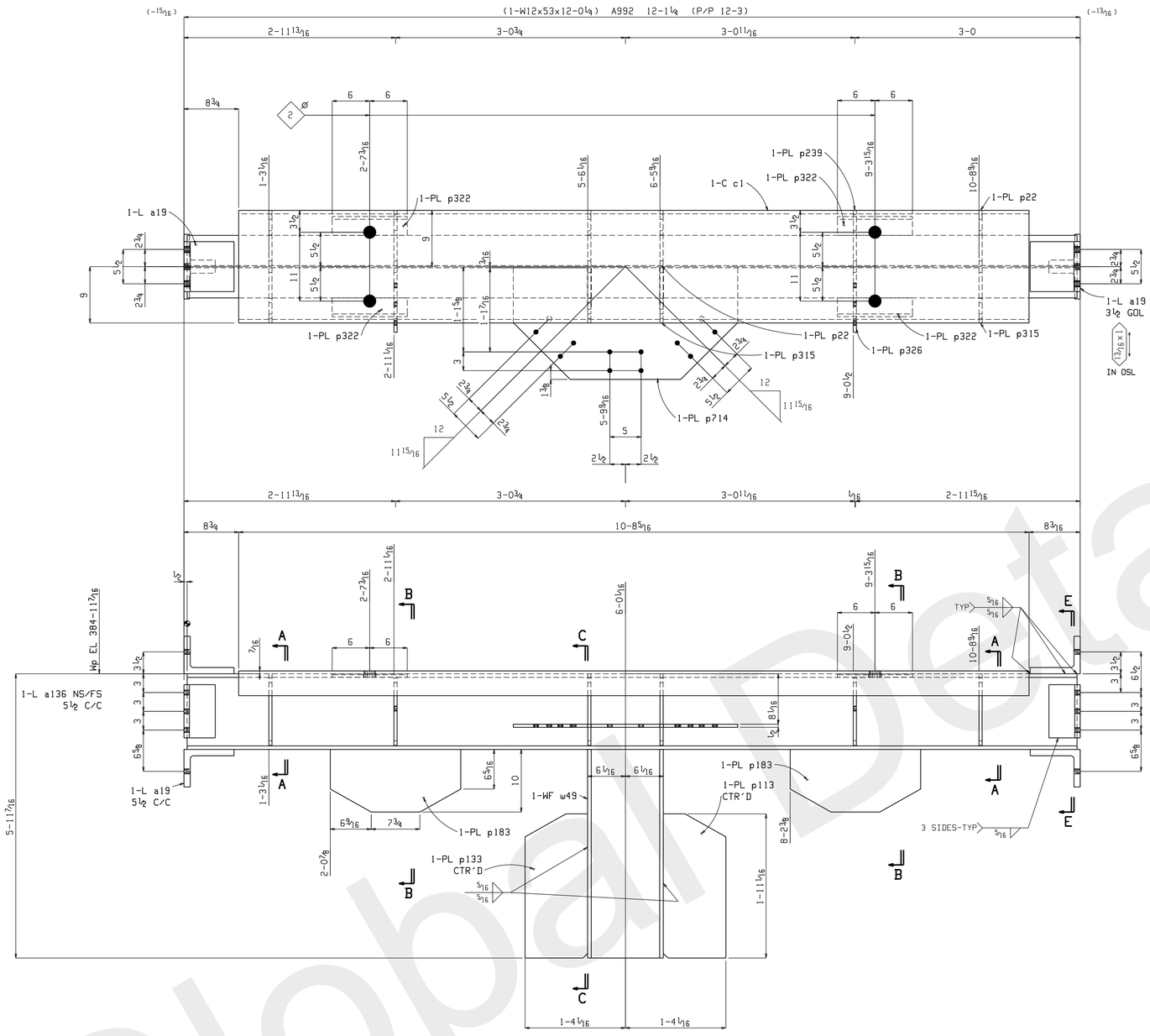

ONE BEAM 161B1

W	12⅛x⅜
F	10x9/16

SHOP BOLTS:
4-1¾x3¼ A490N

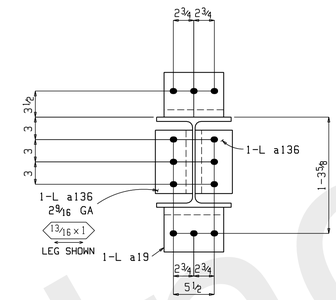

Section E-E
161B1

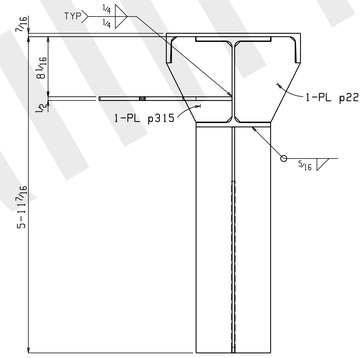

Section C-C
161B1

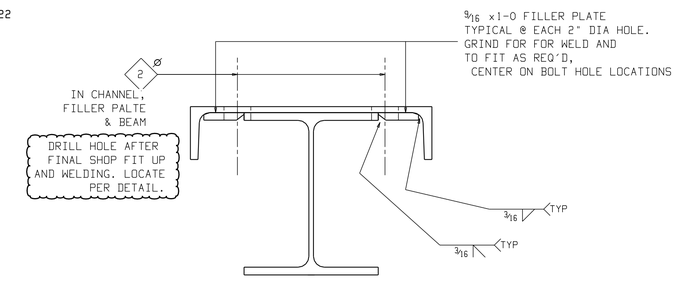

TYPICAL DETAIL

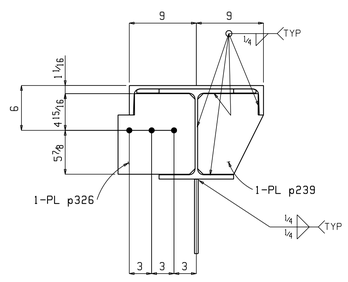

Section B-B
161B1

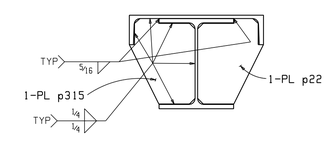

Section A-A
161B1

BILL OF MATERIAL

NO REQ	MARK NO	ASSY MARK	DESCRIPTION	LENGTH		REMARKS	WEIGHT TOTAL
ONE	161B1		BEAM				1962
1		161B1	W12x53	12	0¼	A992	637
1		w296	W12x53	4	11 5/16	S1E A992	262
4		a19	L8x6x1	0	8	A36	118
4		a136	L5x5x⅞	0	8½	A36	77
1		c133	MC18x42.7	10	8 5/16	A36	457
4		p322	PL 9/16x3	1	0	A36	23
1		p714	PL½x17⅞	2	11⅞	A36	91
2		p326	PL½x10 5/16	0	10 13/16	A36	32
1		p113	PL½x10	1	11 1/16	A36	33
1		p133	PL½x10	1	11 1/16	A36	33
2		p183	PL½x10	1	8⅞	A36	59
2		p239	PL½x8 13/16	0	10 13/16	A36	27
4		p22	PL½x8 13/16	0	11 7/16	A36	57
4		p315	PL½x8 13/16	0	11 7/16	A36	57
			FIELD BOLTS				
6			¾ Dia A490N	0	3¼	1HD WASH	
8			¾ Dia A490N	0	2¾	1HD WASH	
4			¾ Dia A490N	0	2½	1HD WASH	

SHOP NOTES:
HOLES: 13/16" Dia U.N.O
SURFACE PREP: SSPC-SP 2
FINISH: 1 S/C EPOXY PRIMER (SW)
1 F/C HP EPOXY (SW)
ELECTRODES: E70XX - (LOW HYDROGEN)

JOB NAME: THE LUBRIZOL CORP
CUSTOMER: CHEMSTRESS CONSTRUCTION
JOB#: 11-509
DESCRIPTION: BRACING DETAILS

SCALE	DRAWN BY	CHECK	G.K.
1¼=12"	TC	-	-

FormulaFabricating LLC
5200 W. 164th. Street o Brook Park, Ohio 44142
Phone 216-898-5788 o Fax 216-898-5898
formulafabricating.com

DATE: 5.6.11 SHEET: 161

NO	DATE	ISSUES OR REVISIONS	BY
2	Aug 18 2011	FABRICATION	TDB
1	Jun 14 2011	APP #2	TDB
0	May 6 2011	APPROVAL	TC

DRAWINGS PREPARED BY,
GLOBAL DETAILING, INC.
JOB # 11-372

Global Detailing, Inc.

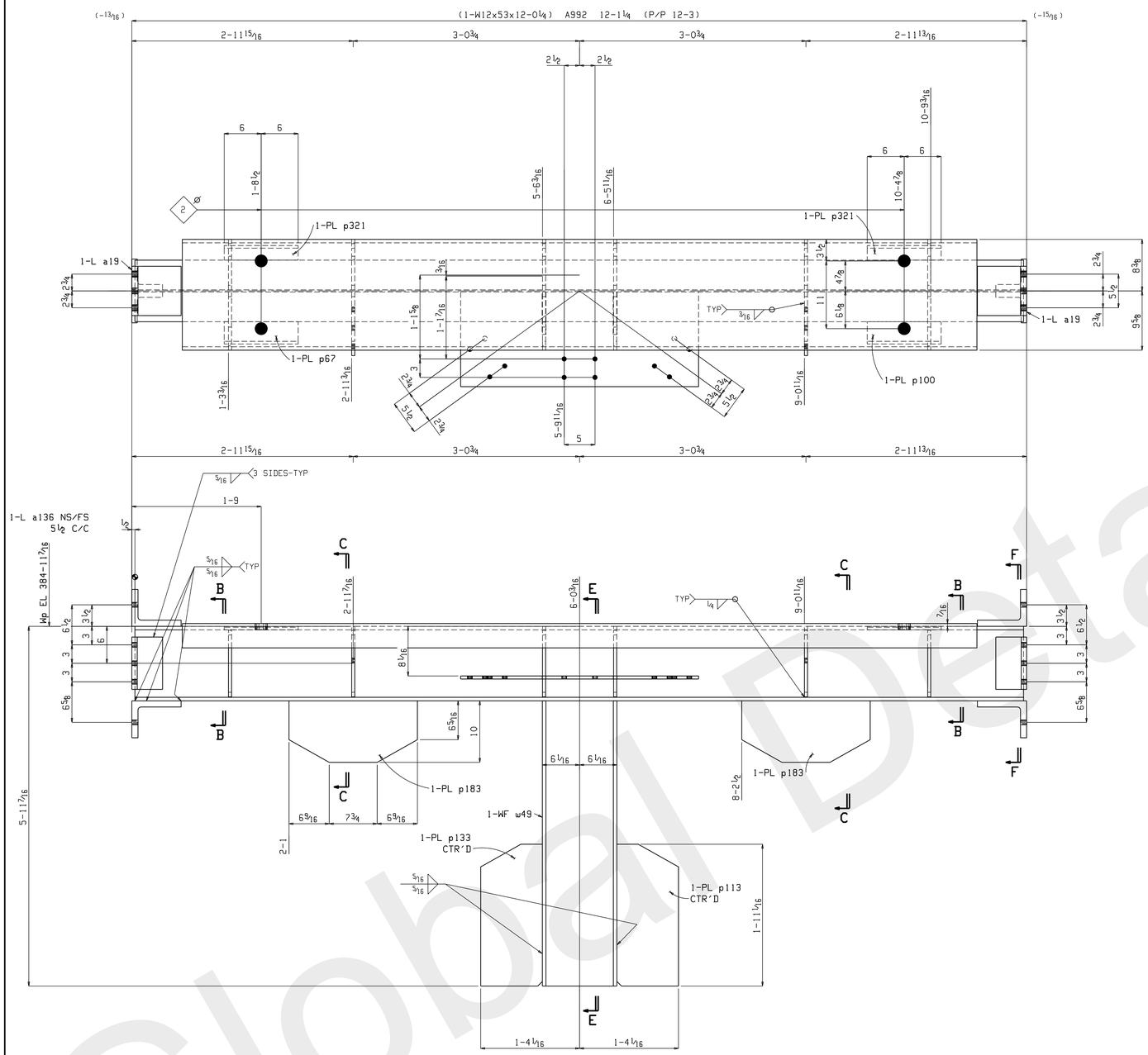

ONE BEAM 162B1

W | 12⅛x⅜
F | 10x⁹⁄₁₆

SHOP BOLTS:
4-1¾x3¼ A490N

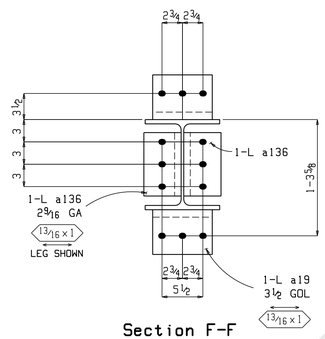

Section F-F
162B1

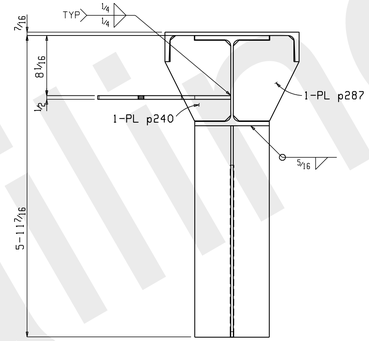

Section E-E
162B1

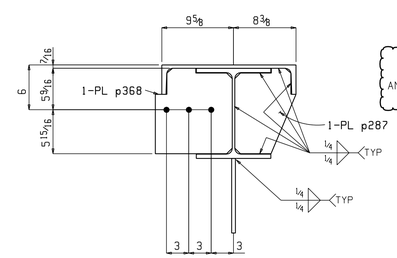

Section C-C
162B1

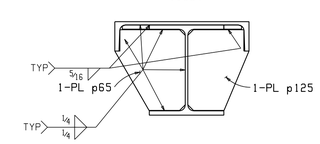

Section B-B
162B1

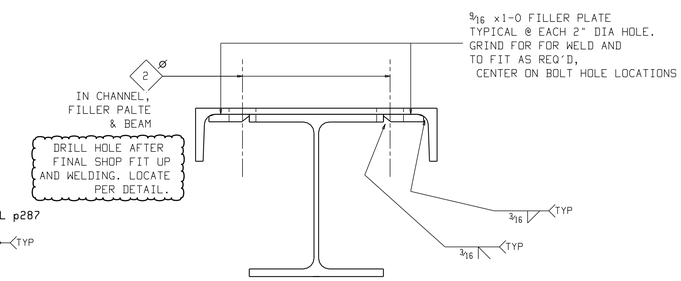

TYPICAL DETAIL

BILL OF MATERIAL

NO REQ	MARK NO	ASSY MARK	DESCRIPTION	LENGTH		REMARKS	WEIGHT TOTAL
ONE	162B1		BEAM				1955
1		162B1	W12x53	12	0¼	A992	637
1		w296	W12x53	4	11⁵⁄₁₆	S1E A992	262
4		a19	L8x6x1	0	8	A36	118
4		a136	L5x5x⅞	0	8½	A36	77
1		c206	MC18x42.7	10	8½	S2E A36	457
1		p67	PL⁹⁄₁₆x3⅜	1	0	A36	7
1		p100	PL⁹⁄₁₆x3⅜	1	0	A36	7
2		p321	PL⁹⁄₁₆x2⅜	1	0	A36	9
1		p365	PL½x15⅜	3	2⅝	A36	84
1		p368	PL½x10⁵⁄₁₆	0	11⁷⁄₁₆	A36	17
1		p367	PL½x10⁵⁄₁₆	0	11⁷⁄₁₆	A36	17
1		p113	PL½x10	1	11¹⁄₁₆	A36	33
1		p133	PL½x10	1	11¹⁄₁₆	A36	33
2		p183	PL½x10	1	8⅞	A36	59
2		p240	PL½x9⁷⁄₁₆	0	11⁷⁄₁₆	A36	31
2		p65	PL½x9⁷⁄₁₆	0	10¹³⁄₁₆	A36	29
4		p287	PL½x8³⁄₁₆	0	11⁷⁄₁₆	A36	53
2		p125	PL½x8³⁄₁₆	0	10¹³⁄₁₆	A36	25
			FIELD BOLTS				
6			¾ Dia A490N	0	3¼	1HD WASH	
4			¾ Dia A325N	0	2½	1HD WASH	
8			¾ Dia A325N	0	2¼	1HD WASH	

SHOP NOTES:
HOLES: ¹³⁄₁₆" Dia U.N.O
SURFACE PREP: SSPC-SP 2
FINISH: 1 S/C EPOXY PRIMER (SW)
1 F/C HP EPOXY (SW)
ELECTRODES: E70XX - (LOW HYDROGEN)

JOB NAME: THE LUBRIZOL CORP
CUSTOMER: CHEMSTRESS CONSTRUCTION
JOB#: 11-509
DESCRIPTION: BRACING DETAILS

SCALE	DRAWN BY	CHECK	O.K.
1¼=12"	TC	-	-

FormulaFabricating LLC
5200 W. 164th. Street ▫ Brook Park, Ohio 44142
Phone 216-898-5788 ▫ Fax 216-898-5898
formulafabricating.com

DATE: 5.6.11 SHEET: 162

NO	DATE	ISSUES OR REVISIONS	BY
2	Aug 18 2011	FABRICATION	TDB
1	Jun 14 2011	APP #2	TDB
0	May 6 2011	APPROVAL	TC

DRAWINGS PREPARED BY, GLOBAL DETAILING, INC. JOB # 11-372

Global Detailing, Inc.

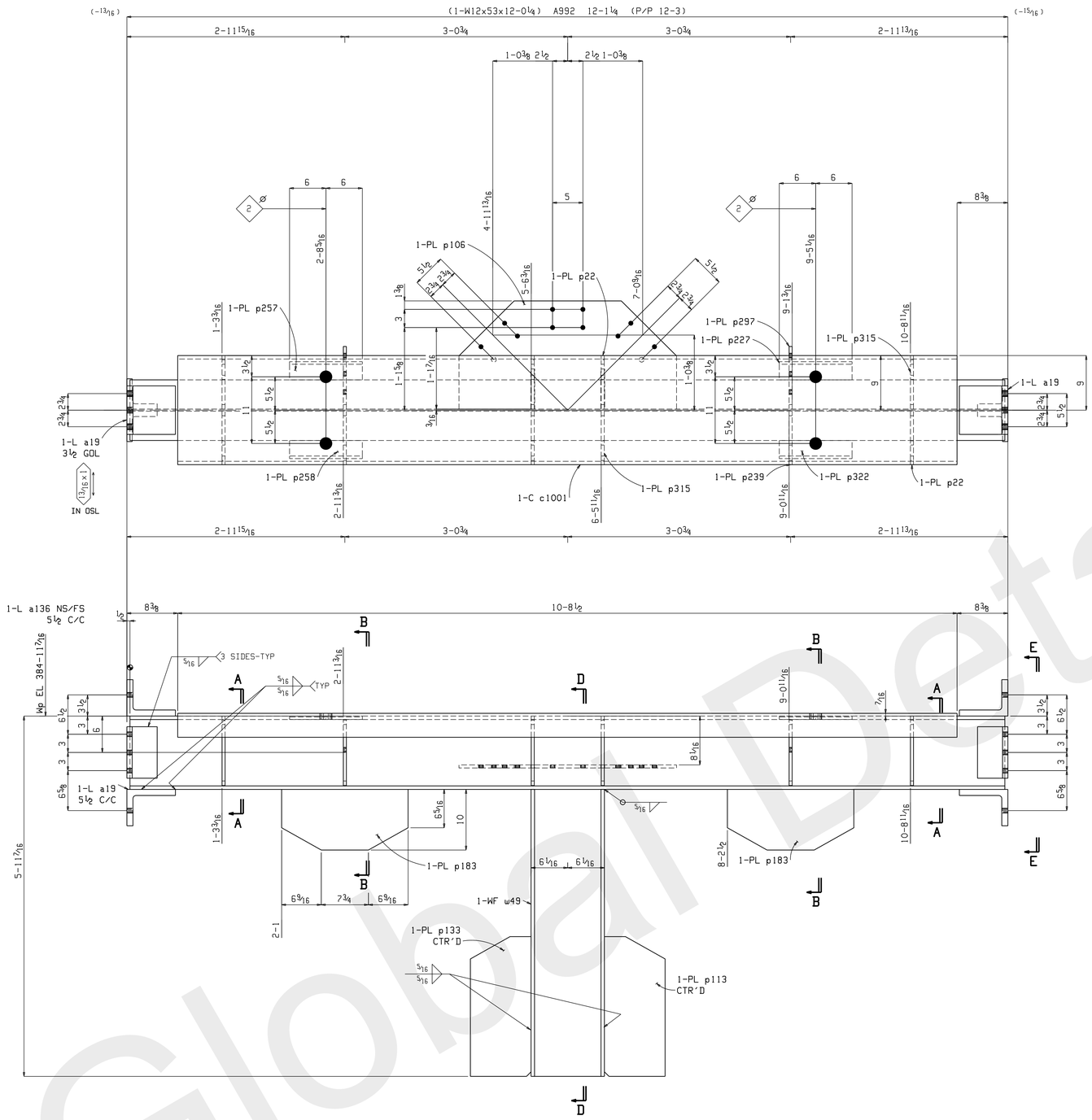

ONE BEAM 163B1

W	12⅛x⅜
F	10x9/16

SHOP BOLTS:
4-1¾x3¼ A490N

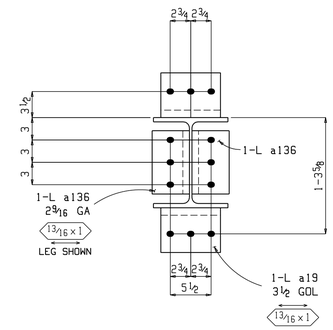

Section E-E

163B1

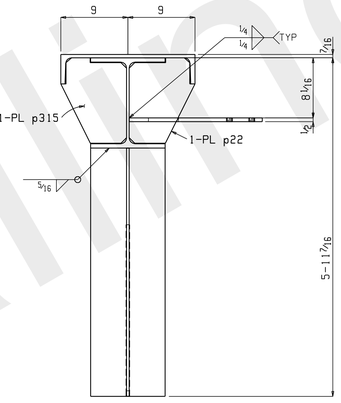

Section D-D

163B1

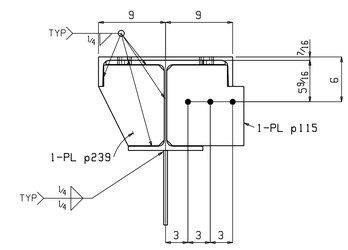

Section B-B

163B1

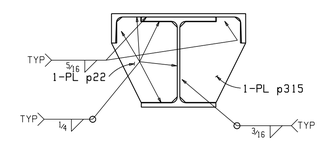

Section A-A

163B1

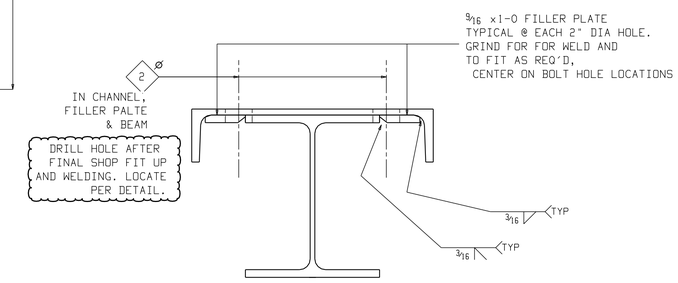

TYPICAL DETAIL

BILL OF MATERIAL

NO REQ	MARK NO	ASSY MARK	DESCRIPTION	LENGTH		REMARKS	WEIGHT TOTAL
ONE	163B1		BEAM				1963
1		163B1	W12x53	12	0¼	A992	637
1		w296	W12x53	4	11 5/16	S1E A992	262
4		a19	L8x6x1	0	8	A36	118
4		a136	L5x5x⅞	0	8½	A36	77
1		c1001	MC18x42.7	10	8½	A36	457
1		p227	PL 9/16x3	1	0	A36	6
1		p257	PL 9/16x3	1	0	A36	6
1		p258	PL 9/16x3	1	0	A36	6
1		p322	PL 9/16x3	1	0	A36	6
1		p106	PL½x12⅞	2	11⅞	A36	91
1		p115	PL½x10 9/16	0	10 13/16	A36	16
1		p297	PL½x10 5/16	0	10 13/16	A36	16
1		p113	PL½x10	1	11 1/16	A36	33
1		p133	PL½x10	1	11 1/16	A36	33
2		p183	PL½x10	1	8⅞	A36	59
2		p239	PL½x8 13/16	0	10 13/16	A36	27
4		p22	PL½x8 13/16	0	11 7/16	A36	57
4		p315	PL½x8 13/16	0	11 7/16	A36	57
			FIELD BOLTS				
6			¾ Dia A490N	0	3¼	1HD WASH	
8			¾ Dia A490N	0	2¾	1HD WASH	
4			¾ Dia A490N	0	2½	1HD WASH	

SHOP NOTES:

HOLES: 13/16" Dia U.N.O
SURFACE PREP: SSPC-SP 2
FINISH: 1 S/C EPOXY PRIMER (SW)
1 F/C HP EPOXY (SW)
ELECTRODES: E70XX - (LOW HYDROGEN)

JOB NAME: THE LUBRIZOL CORP
CUSTOMER: CHEMSTRESS CONSTRUCTION
JOB#: 11-509
DESCRIPTION: BRACING DETAILS

SCALE	DRAWN BY	CHECK	O.K.
1¼=12"	TC	-	-

FormulaFabricating LLC
5200 W. 164th. Street • Brook Park, Ohio 44142
Phone 216-898-5788 • Fax 216-898-5898
formulafabricating.com

DATE: 5.6.11 SHEET: 163

DRAWINGS PREPARED BY, GLOBAL DETAILING, INC. JOB # 11-372

NO	DATE	ISSUES OR REVISIONS	BY
1	Jun 14 2011	APP #2	TDB
0	May 6 2011	APPROVAL	TC

Global Detailing, Inc.

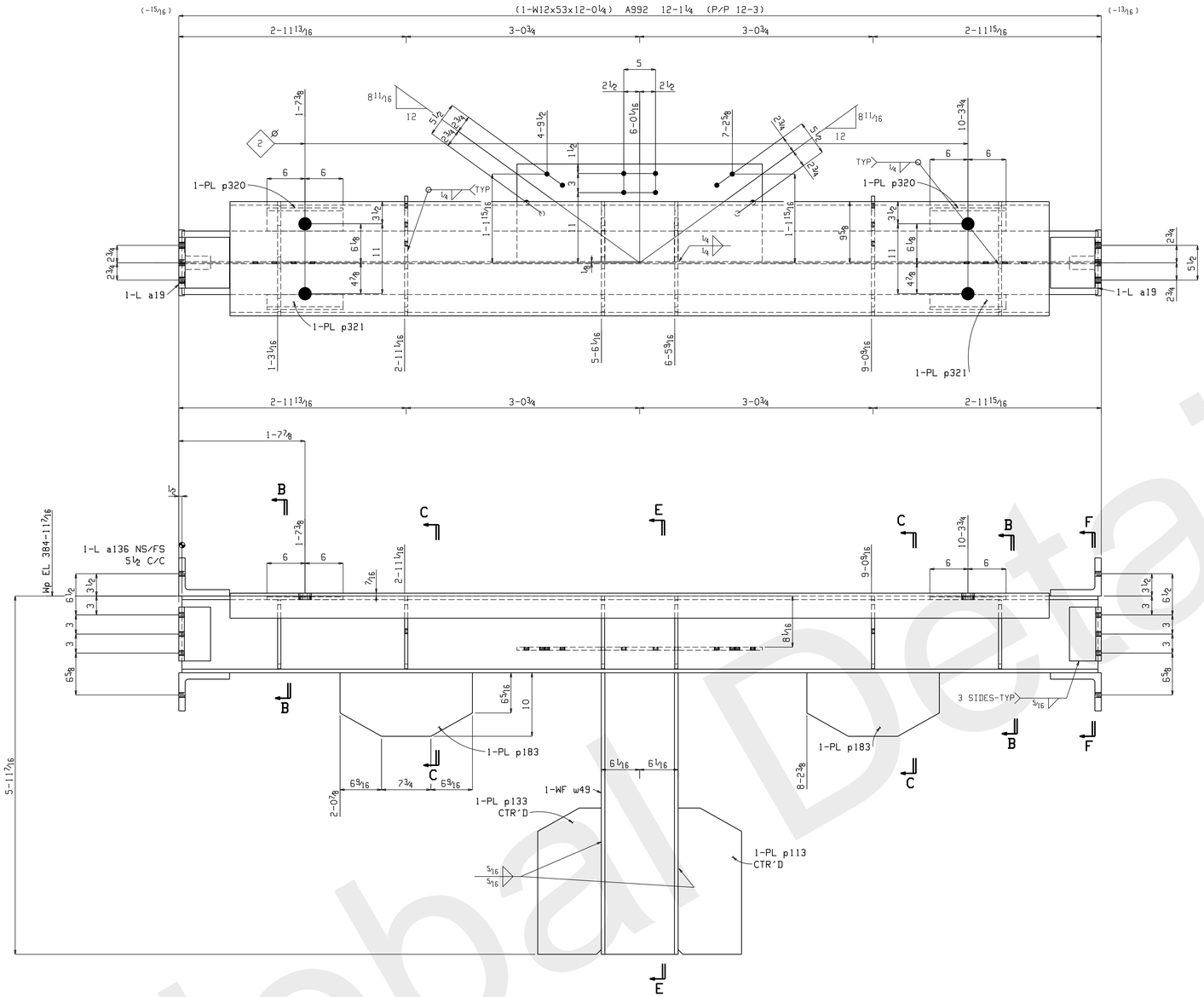

Section A-A

164B1

ONE BEAM 164B1

W | 12⅛x⅜
F | 10x9/16

SHOP BOLTS:
4-1¾x3¼ A490N

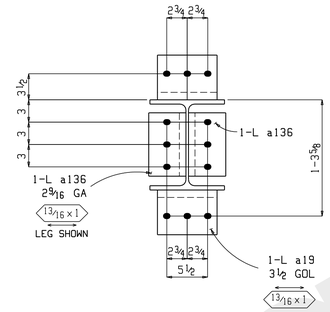

Section F-F

164B1

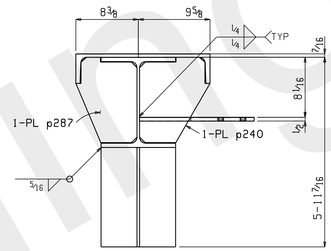

Section E-E

164B1

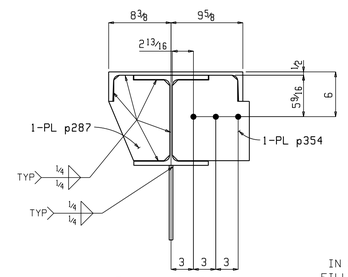

Section C-C

164B1

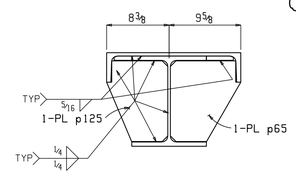

Section B-B

164B1

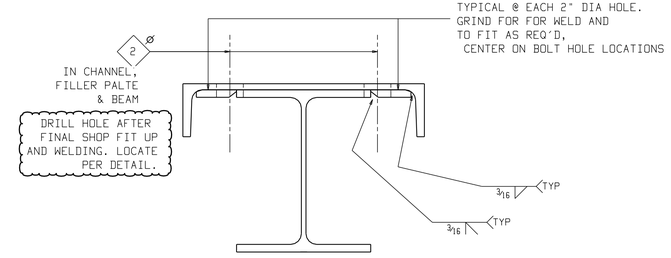

TYPICAL DETAIL

BILL OF MATERIAL

NO REQ	MARK NO	ASSY MARK	DESCRIPTION	LENGTH		REMARKS	WEIGHT TOTAL
ONE	164B1		BEAM				1956
1		164B1	W12x53	12	0¼	A992	637
1		w296	W12x53	4	11 5/16	S1E A992	262
4		a19	L8x6x1	0	8	A36	118
4		a136	L5x5x⅞	0	8½	A36	77
1		c106	MC18x42.7	10	8 13/16	S2E A36	458
2		p320	PL 9/16x3⅜	1	0	A36	14
2		p321	PL 9/16x2⅜	1	0	A36	9
1		p32	PL½x15⅜	3	2⅝	A36	84
2		p354	PL½x10 5/16	0	11 7/16	A36	34
1		p113	PL½x10	1	11 1/16	A36	33
1		p133	PL½x10	1	11 1/16	A36	33
2		p183	PL½x10	1	8⅞	A36	59
2		p240	PL½x9 7/16	0	11 7/16	A36	31
2		p65	PL½x9 7/16	0	10 13/16	A36	29
4		p287	PL½x8 3/16	0	11 7/16	A36	53
2		p125	PL½x8 3/16	0	10 13/16	A36	25
			FIELD BOLTS				
6			¾ Dia A490N	0	3¼	1HD WASH	
4			¾ Dia A325N	0	2½	1HD WASH	
8			¾ Dia A325N	0	2¼	1HD WASH	

SHOP NOTES:
HOLES: 13/16" Dia U.N.O
SURFACE PREP: SSPC-SP 2
FINISH: NONE
ELECTRODES: E70XX - (LOW HYDROGEN)

JOB NAME: THE LUBRIZOL CORP
CUSTOMER: CHEMSTRESS CONSTRUCTION
JOB#: 11-509
DESCRIPTION: BRACING DETAILS

SCALE	DRAWN BY	CHECK	Q.K.
1¼=12"	TC	-	-

NO	DATE	ISSUES OR REVISIONS	BY
2	Aug 18 2011	FAB	TDB
1	Jun 14 2011	APP #2	TDB
0	May 6 2011	APPROVAL	TC

DRAWINGS PREPARED BY,
GLOBAL DETAILING, INC.
JOB # 11-372

FormulaFabricating LLC
5200 W. 164th. Street o Brook Park, Ohio 44142
Phone 216-898-5788 o Fax 216-898-5898
formulafabricating.com

DATE: 5.6.11 SHEET: 164

Global Detailing, Inc.

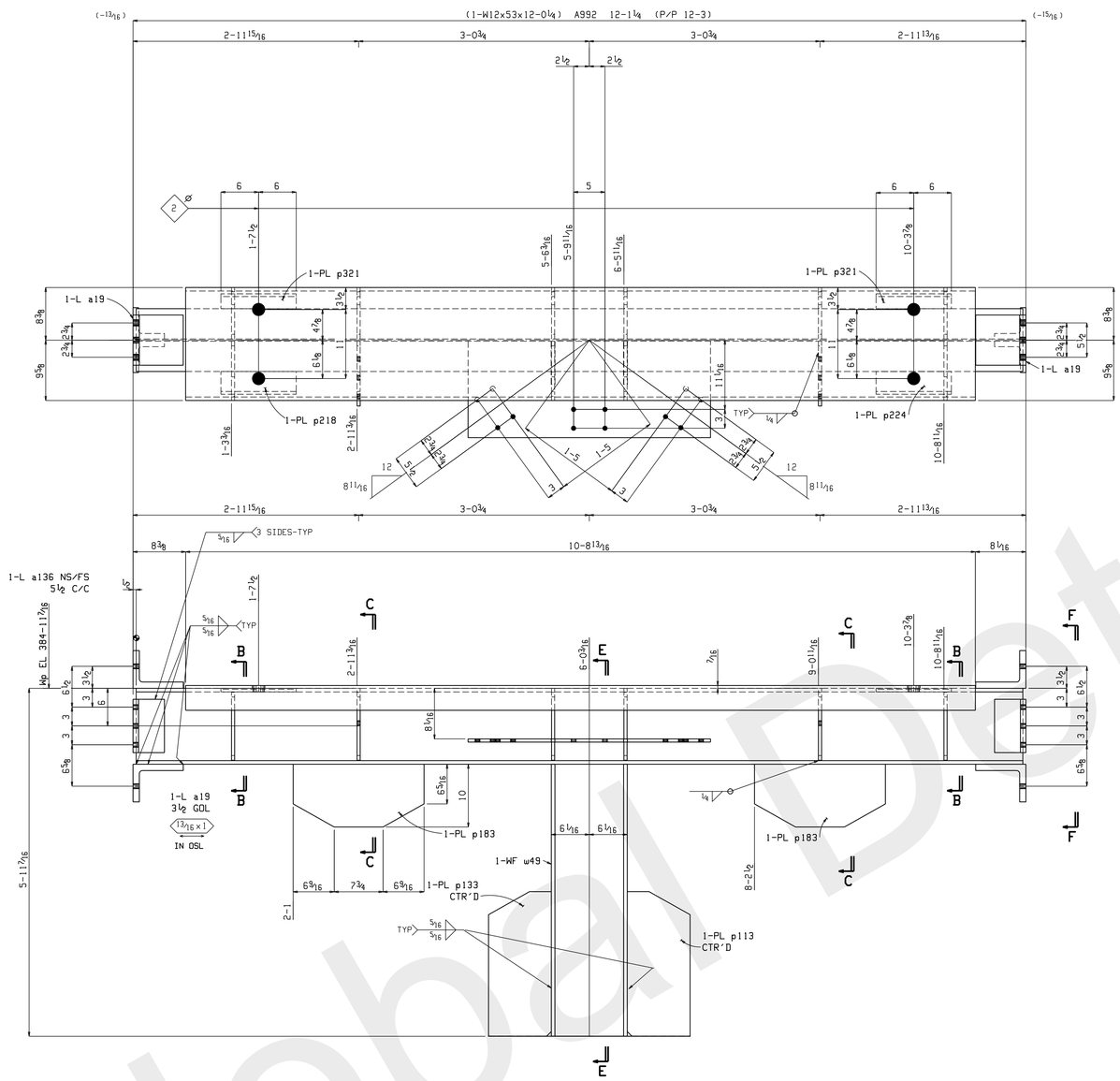

ONE BEAM 165B1

W 12⅛x3⅜
F 10x9/16

SHOP BOLTS:
4-1¾x3¼ A490N

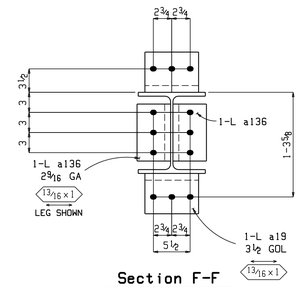

Section F-F

165B1

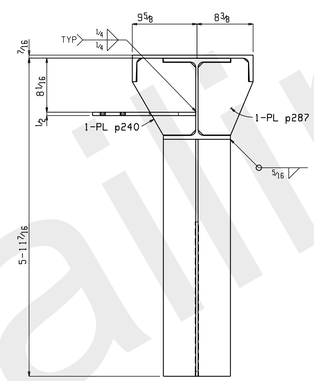

Section E-E

165B1

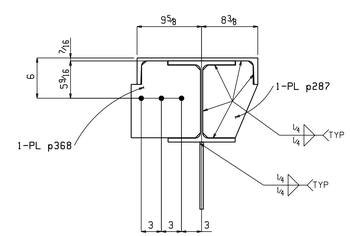

Section C-C

165B1

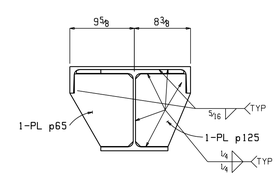

Section B-B

165B1

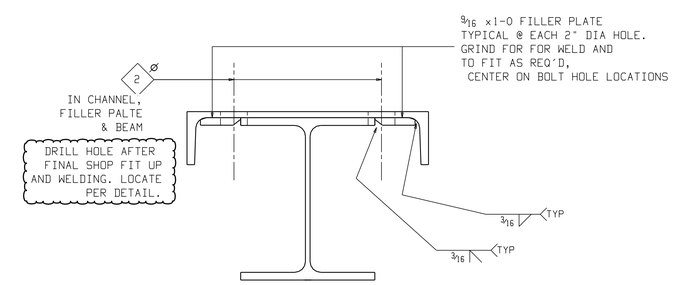

TYPICAL DETAIL

BILL OF MATERIAL

NO REQ	MARK NO	ASSY MARK	DESCRIPTION	LENGTH		REMARKS	WEIGHT TOTAL
ONE	165B1		BEAM				1956
1		165B1	W12x53	12	0¼	A992	637
1		w296	W12x53	4	11 5/16	S1E A992	262
4		a19	L8x6x1	0	8	A36	118
4		a136	L5x5x⅞	0	8½	A36	77
1		c27	MC18x42.7	10	8 13/16	A36	458
1		p218	PL 9/16x3⅜	1	0	A36	7
1		p224	PL 9/16x3⅜	1	0	A36	7
2		p321	PL 9/16x2⅜	1	0	A36	9
1		p706	PL½x15⅜	3	2⅝	A36	84
1		p368	PL½x10 5/16	0	11 7/16	A36	17
1		p367	PL½x10 5/16	0	11 7/16	A36	17
1		p113	PL½x10	1	11 1/16	A36	33
1		p133	PL½x10	1	11 1/16	A36	33
2		p183	PL½x10	1	8⅞	A36	59
2		p240	PL½x9 7/16	0	11 7/16	A36	31
2		p65	PL½x9 7/16	0	10 13/16	A36	29
4		p287	PL½x8 3/16	0	11 7/16	A36	53
2		p125	PL½x8 3/16	0	10 13/16	A36	25
			FIELD BOLTS				
6			¾ Dia A490N	0	3¼	1HD WASH	
4			¾ Dia A325N	0	2½	1HD WASH	
8			¾ Dia A325N	0	2¼	1HD WASH	

SHOP NOTES:

HOLES: 13/16" Dia U.N.O
SURFACE PREP: SSPC-SP 2
FINISH: 1 S/C EPOXY PRIMER (SW)
1 F/C HP EPOXY (SW)
ELECTRODES: E70XX - (LOW HYDROGEN)

JOB NAME: THE LUBRIZOL CORP
CUSTOMER: CHEMSTRESS CONSTRUCTION
JOB#: 11-509
DESCRIPTION: BRACING DETAILS

SCALE	DRAWN BY	CHECK	Q.K.
1¼=12"	TC	-	-

FormulaFabricating LLC
5200 W. 164th. Street ◦ Brook Park, Ohio 44142
Phone 216-898-5788 ◦ Fax 216-898-5898
formulafabricating.com

DATE: 5.6.11 SHEET: 165

NO	DATE	ISSUES OR REVISIONS	BY
2	Aug 18 2011	FAB	TDB
1	Jun 14 2011	APP #2	TDB
0	May 6 2011	APPROVAL	TC

DRAWINGS PREPARED BY,
GLOBAL DETAILING, INC.
JOB # 11-372

Global Detailing, Inc.

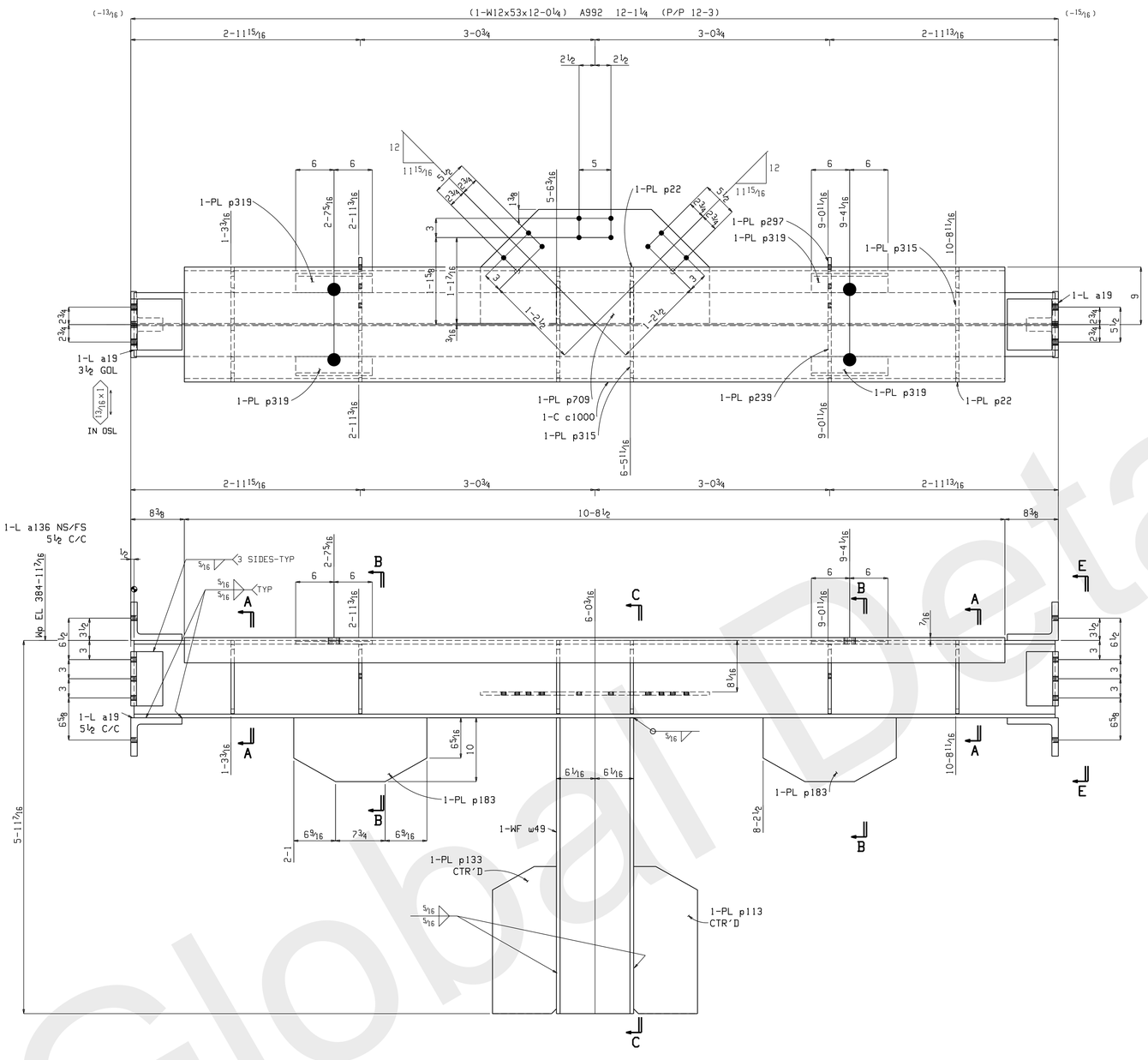

ONE BEAM 166B1

W	12⅛x⅜
F	10x9/16

SHOP BOLTS:
4-1¾x3¼ A490N

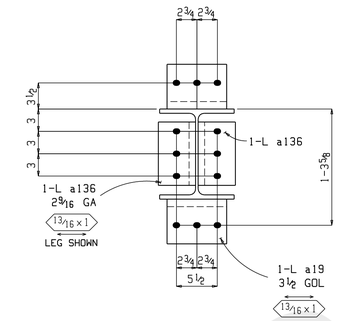

Section E-E

166B1

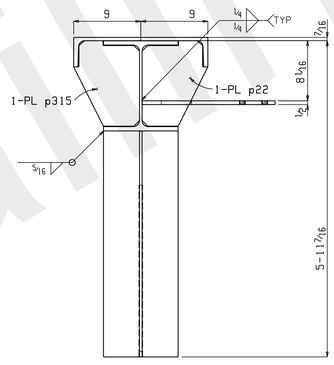

Section C-C

166B1

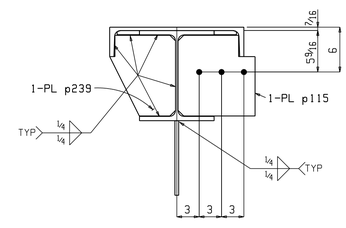

Section B-B

166B1

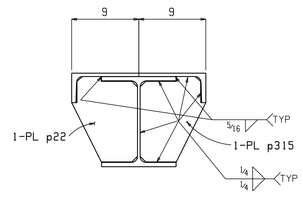

Section A-A

166B1

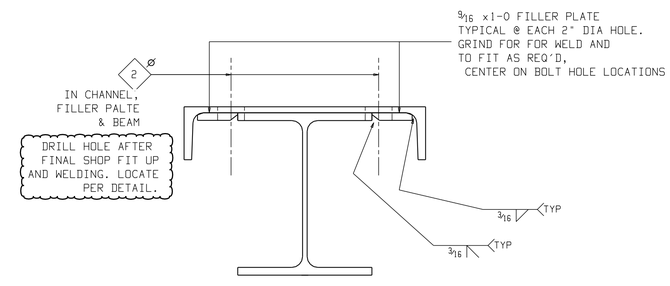

TYPICAL DETAIL

BILL OF MATERIAL

NO REQ	MARK NO	ASSY MARK	DESCRIPTION	LENGTH		REMARKS	WEIGHT TOTAL
ONE	166B1		BEAM				1963
1		166B1	W12x53	12	0¼	A992	637
1		w296	W12x53	4	11 5/16	S1E A992	262
4		a19	L8x6x1	0	8	A36	118
4		a136	L5x5x⅞	0	8½	A36	77
1		c134	MC18x42.7	10	8½	A36	457
4		p319	PL 9/16x3	1	0	A36	23
1		p709	PL½x17⅞	2	11⅞	A36	91
1		p115	PL½x10 5/16	0	10 13/16	A36	16
1		p297	PL½x10 5/16	0	10 13/16	A36	16
1		p113	PL½x10	1	11 1/16	A36	33
1		p133	PL½x10	1	11 1/16	A36	33
2		p183	PL½x10	1	8⅞	A36	59
2		p239	PL½x8 13/16	0	10 13/16	A36	27
4		p22	PL½x8 13/16	0	11 7/16	A36	57
4		p315	PL½x8 13/16	0	11 7/16	A36	57
			FIELD BOLTS				
6			¾ Dia A490N	0	3¼	1HD WASH	
8			¾ Dia A490N	0	2¾	1HD WASH	
4			¾ Dia A490N	0	2½	1HD WASH	

SHOP NOTES:
HOLES: 13/16" Dia U.N.O
SURFACE PREP: SSPC-SP 2
FINISH: 1 S/C EPOXY PRIMER (SW)
1 F/C HP EPOXY (SW)
ELECTRODES: E70XX - (LOW HYDROGEN)

JOB NAME: THE LUBRIZOL CORP
CUSTOMER: CHEMSTRESS CONSTRUCTION
JOB#: 11-509
DESCRIPTION: BRACING DETAILS

SCALE	DRAWN BY	CHECK	O.K.
1¼=12"	TC	-	-

FormulaFabricating LLC
5200 W. 164th. Street o Brook Park, Ohio 44142
Phone 216-898-5788 o Fax 216-898-5898
formulafabricating.com

DATE: 5.6.11 SHEET: 166

NO	DATE	ISSUES OR REVISIONS	BY
2	Aug 18 2011	FAB	TDB
1	Jun 14 2011	APP #2	TDB
0	May 6 2011	APPROVAL	TC

DRAWINGS PREPARED BY,
GLOBAL DETAILING, INC.
JOB # 11-372

Global Detailing, Inc.

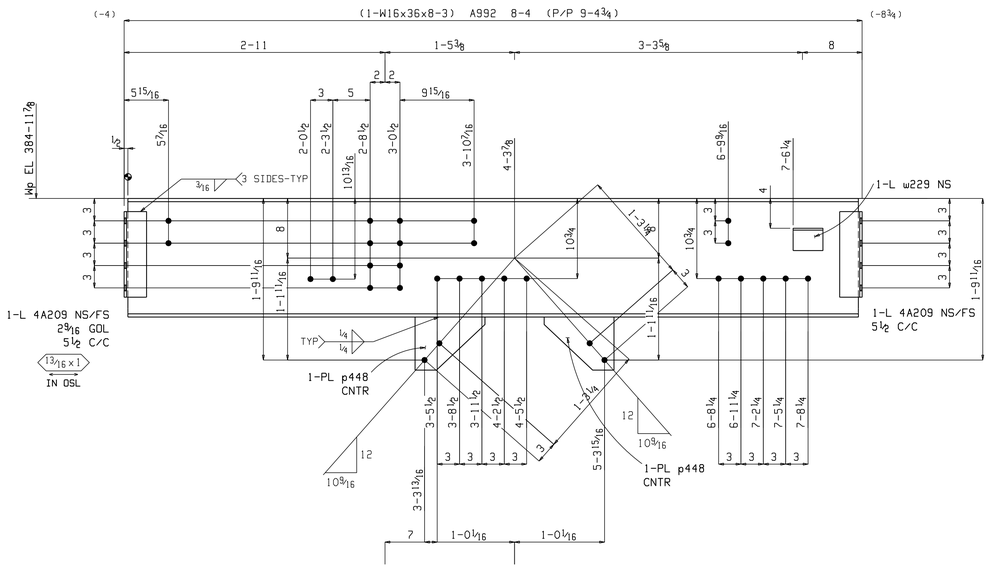

ONE BEAM 2127B1

W	15⅞x5⁄16
F	7x7⁄16

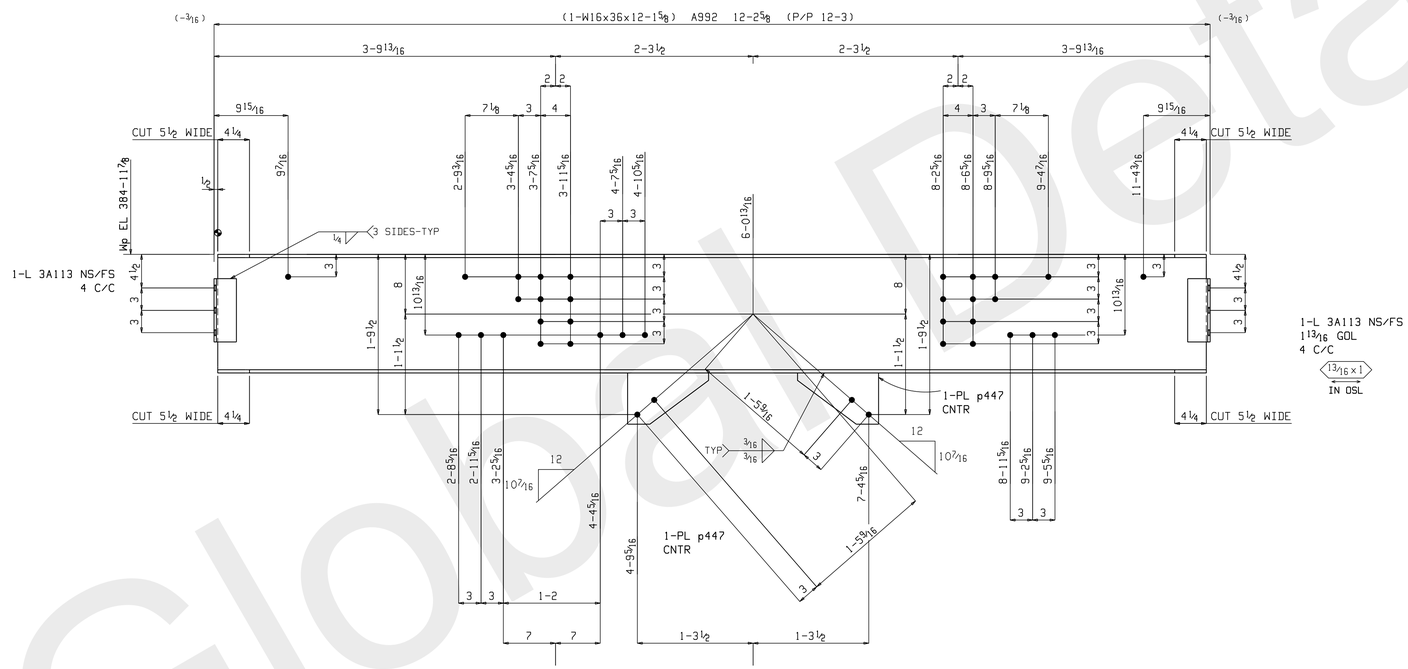

ONE BEAM 2127B2

W	15⅞x5⁄16
F	7x7⁄16

BILL OF MATERIAL

NO REQ	MARK NO	ASSY MARK	DESCRIPTION	LENGTH		REMARKS	WEIGHT TOTAL
ONE	2127B1		BEAM				355
1		2127B1	W16x36	8	3	A992	297
4		4A209	L4x3x5⁄16	0	11½	A36	28
1		w229	L4x3x¼	0	4	A36	2
2		p448	PL¾x7⅛	0	9⅜	A36	28
			FIELD BOLTS				
4			¾ Dia A490N	0	3	1HD WASH	
11			¾ Dia A325N	0	1¾	1HD WASH	
15			¾ Dia A490N	0	1¾	1HD WASH	
ONE	2127B2		BEAM				486
1		2127B2	W16x36	12	1⅝	A992	437
4		3A113	L3x3x5⁄16	0	8½	A36	17
2		p447	PL¾x6⅞	0	10⅞	A36	32
			FIELD BOLTS				
4			¾ Dia A490N	0	3	1HD WASH	
4			¾ Dia A325N	0	1¾	1HD WASH	
25			¾ Dia A490N	0	1¾	1HD WASH	

SHOP NOTES:
HOLES: 13⁄16" Dia U.N.O
SURFACE PREP: SSPC-SP 2
FINISH: 1 S/C EPOXY PRIMER (SW)
1 F/C HP EPOXY (SW)
ELECTRODES: E70XX - (LOW HYDROGEN)

JOB NAME: THE LUBRIZOL CORP
CUSTOMER: CHEMSTRESS CONSTRUCTION
JOB#: 11-509
DESCRIPTION: DRYER FRAMING DETAILS

SCALE	DRAWN BY	CHECK	Q.K.
1¼=12"	MC	-	-

FormulaFabricating LLC
5200 W. 164th. Street ▫ Brook Park, Ohio 44142
Phone 216-898-5788 ▫ Fax 216-898-5898
formulafabricating.com

DATE: 7.20.11 SHEET: 2127

DRAWINGS PREPARED BY, GLOBAL DETAILING, INC. JOB # 11-372

NO	DATE	ISSUES OR REVISIONS	BY
1	Aug 18 2011	FAB	TDB
0	Aug 3 2011	FOR APPROVAL	TDB

Global Detailing, Inc

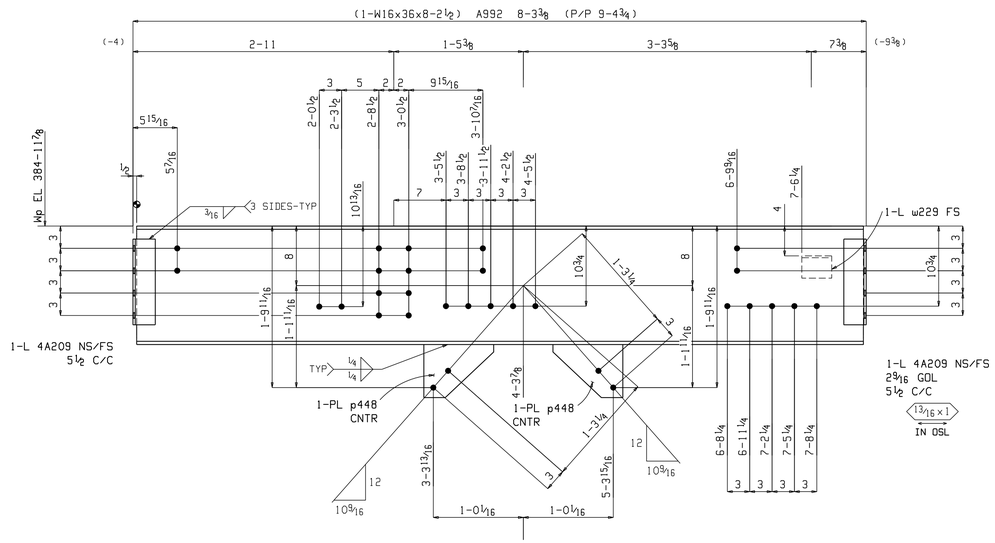

ONE BEAM 2128B1

(1-W16x36x12-1¾) A992 12-2⅝ (P/P 12-3)

W 15⅞x5⁄16
F 7x7⁄16

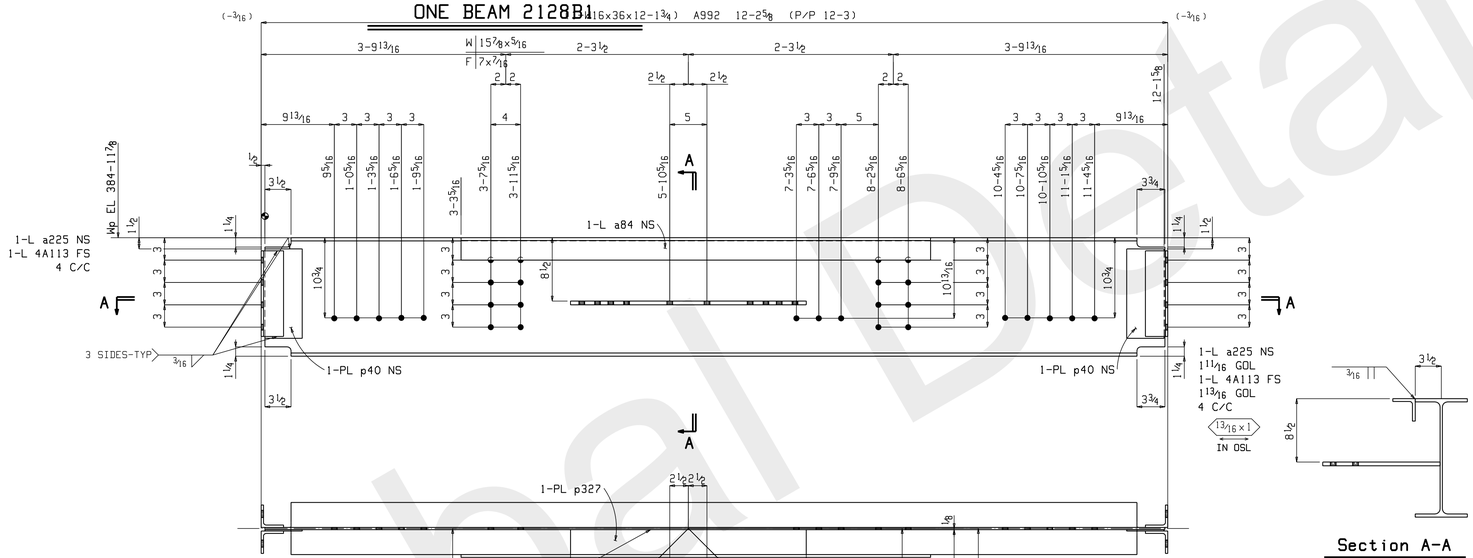

Section A-A
2128B2

Section A-A
2128B2

ONE BEAM 2128B2

W 15⅞x5⁄16
F 7x7⁄16

BILL OF MATERIAL

NO REQ	MARK NO	ASSY MARK	DESCRIPTION	LENGTH		REMARKS	WEIGHT TOTAL
ONE	2128B1		BEAM				353
1		2128B1	W16x36	8	2½	A992	296
4		4A209	L4x3x5⁄16	0	11½	A36	28
1		w229	L4x3x¼	0	4	A36	2
2		p448	PL¾x7⅛	0	9⅜	A36	28
			FIELD BOLTS				
4			¾ Dia A490N	0	3	1HD WASH	
11			¾ Dia A325N	0	1¾	1HD WASH	
15			¾ Dia A490N	0	1¾	1HD WASH	
ONE	2128B2		BEAM				578
1		2128B2	W16x36	12	1¾	A992	437
1		a84	L3x3x3⅜	5	7	A36	40
2		a225	L3x3x5⁄16	0	11½	A36	12
2		4A113	L3x3x5⁄16	0	11½	A36	12
1		p327	PL½x15¾	2	7⅝	A36	71
2		p40	PL3⁄16x5	1	0	A36	6
			FIELD BOLTS				
8			¾ Dia A325N	0	2¾	1HD WASH	
4			¾ Dia A325N	0	2½	1HD WASH	
6			¾ Dia A490N	0	2	1HD WASH	
23			¾ Dia A490N	0	1¾	1HD WASH	

SHOP NOTES:
HOLES: 13⁄16" Dia U.N.O
SURFACE PREP: SSPC-SP 2
FINISH: 1 S/C EPOXY PRIMER (SW)
1 F/C HP EPOXY (SW)
ELECTRODES: E70XX - (LOW HYDROGEN)

JOB NAME: THE LUBRIZOL CORP
CUSTOMER: CHEMSTRESS CONSTRUCTION
JOB#: 11-509
DESCRIPTION: DRYER FRAMING DETAILS

SCALE	DRAWN BY	CHECK	G.K.
1¼=12"	MC	-	-

FormulaFabricating LLC
5200 W. 164th. Street ▫ Brook Park, Ohio 44142
Phone 216-898-5788 ▫ Fax 216-898-5898
formulafabricating.com

DATE: 7.20.11 SHEET: 2128

DRAWINGS PREPARED BY, GLOBAL DETAILING, INC. JOB # 11-372

NO	DATE	ISSUES OR REVISIONS	BY
1	Aug 18 2011	FAB	TDB
0	Aug 3 2011	FOR APPROVAL	TDB

Global Detailing, Inc

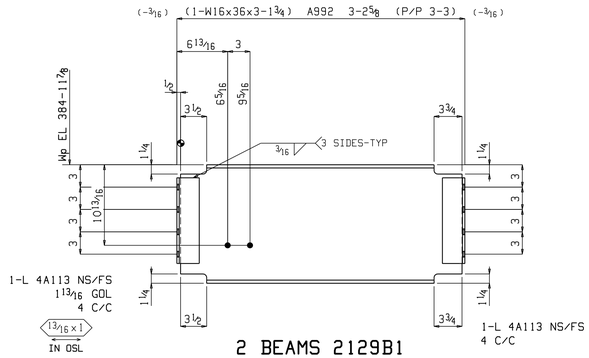

2 BEAMS 2129B1

W 15 7/8 x 5/16
F 7 x 7/16

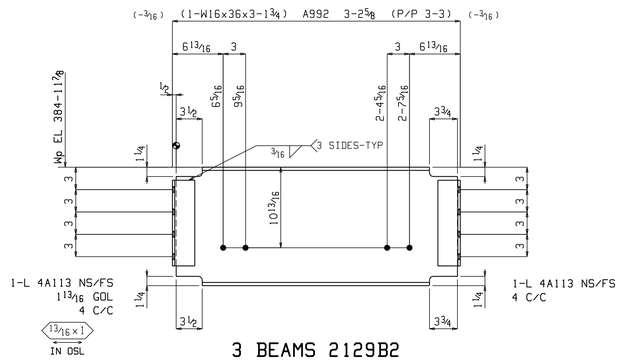

3 BEAMS 2129B2

W 15 7/8 x 5/16
F 7 x 7/16

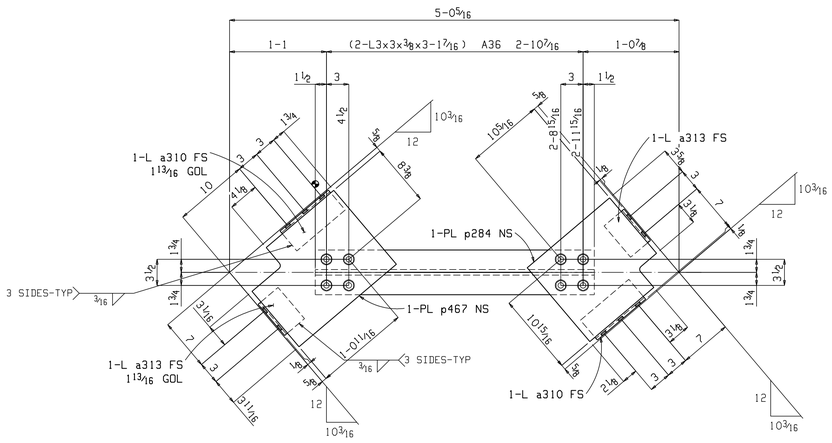

3 HORIZONTAL BRACES 2129HB1

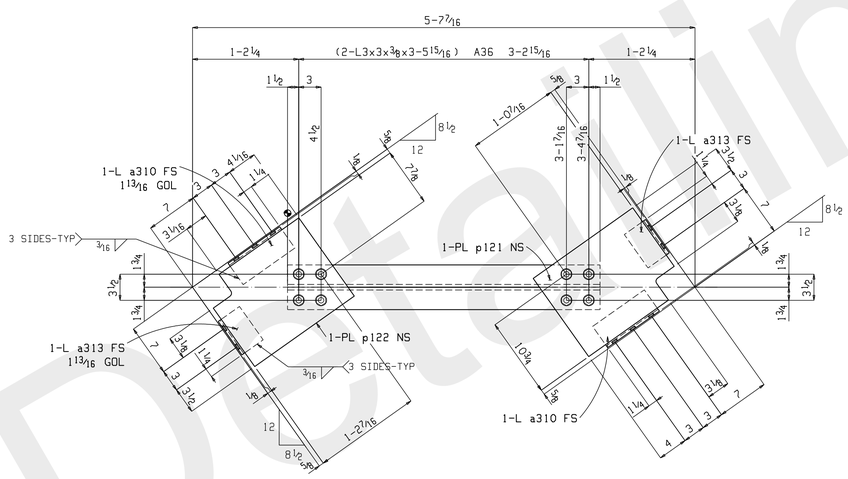

ONE HORIZONTAL BRACE 2129HB2

SHOP BOLTS:
8-3/4x2 A490N

SHOP BOLTS:
8-3/4x2 A490N

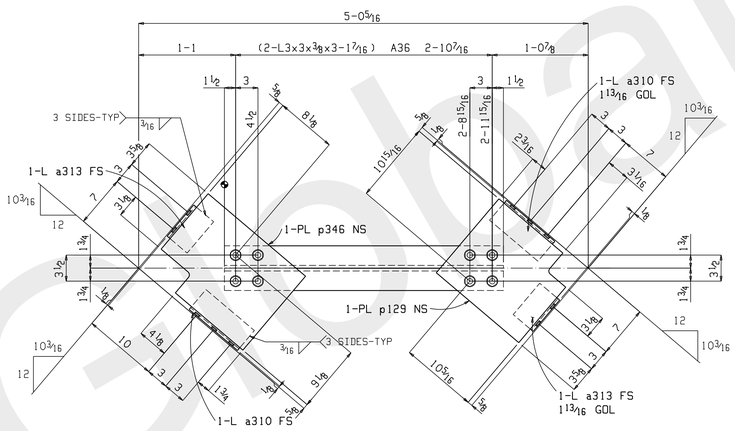

3 HORIZONTAL BRACES 2129HB3

SHOP BOLTS:
8-3/4x2 A490N

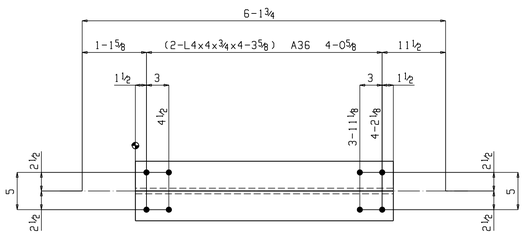

3 HORIZONTAL BRACES 2129HB4

BILL OF MATERIAL

NO REQ	MARK NO	ASSY MARK	DESCRIPTION	LENGTH		REMARKS	WEIGHT TOTAL
2	2129B1		BEAM				273
2		2129B1	W16x36	3	1 3/4	A992	227
8		4A113	L3x3x5/16	0	11 1/2	A36	47
			FIELD BOLTS				
4			3/4 Dia A490N	0	2	1HD WASH	
3	2129B2		BEAM				410
3		2129B2	W16x36	3	1 3/4	A992	340
12		4A113	L3x3x5/16	0	11 1/2	A36	70
			FIELD BOLTS				
12			3/4 Dia A490N	0	1 3/4	1HD WASH	
ONE	2129HB2		HORIZONTAL BRACE				116
1		2129HB2L	L3x3x3/8	3	5 15/16	A36	25
1		2129HB2R	L3x3x3/8	3	5 15/16	A36	25
2		a310	L3 1/2x3x5/16	0	8 1/2	A36	9
2		a313	L3 1/2x3x5/16	0	5 1/2	A36	6
1		p121	PL3/8x12 7/8	1	4 3/8	A36	22
1		p122	PL3/8x12 7/8	1	4 3/8	A36	22
8			3/4 Dia A490N	0	2	1HD WASH	5
3	2129HB4		HORIZONTAL BRACE				478
3		2129HB4L	L4x4x3/4	4	3 5/8	A36	239
3		2129HB4R	L4x4x3/4	4	3 5/8	A36	239
3	2129HB1		HORIZONTAL BRACE				327
3		2129HB1L	L3x3x3/8	3	1 7/16	A36	67
3		2129HB1R	L3x3x3/8	3	1 7/16	A36	67
6		a310	L3 1/2x3x5/16	0	8 1/2	A36	28
6		a313	L3 1/2x3x5/16	0	5 1/2	A36	18
3		p467	PL3/8x13	1	5 1/8	A36	71
3		p284	PL3/8x13	1	2 1/2	A36	60
24			3/4 Dia A490N	0	2	1HD WASH	15
3	2129HB3		HORIZONTAL BRACE				327
3		2129HB3L	L3x3x3/8	3	1 7/16	A36	67
3		2129HB3R	L3x3x3/8	3	1 7/16	A36	67
6		a310	L3 1/2x3x5/16	0	8 1/2	A36	28
6		a313	L3 1/2x3x5/16	0	5 1/2	A36	18
3		p346	PL3/8x13	1	5 1/8	A36	71
3		p129	PL3/8x13	1	2 1/2	A36	60
24			3/4 Dia A490N	0	2	1HD WASH	15

SHOP NOTES:

HOLES: 13/16" Dia U.N.O
SURFACE PREP: SSPC-SP 2
FINISH: 1 S/C EPOXY PRIMER (SW)
1 F/C HP EPOXY (SW)
ELECTRODES: E70XX - (LOW HYDROGEN)

JOB NAME: THE LUBRIZOL CORP
CUSTOMER: CHEMSTRESS CONSTRUCTION
JOB#: 11-509
DESCRIPTION: DRYER FRAMING DETAILS

SCALE	DRAWN BY	CHECK	Q.K.
1 1/4=12"	MC	-	-

FormulaFabricating LLC
5200 W. 164th. Street ▫ Brook Park, Ohio 44142
Phone 216-898-5788 ▫ Fax 216-898-5898
formulafabricating.com

DATE: 7.20.11 SHEET: 2129

DRAWINGS PREPARED BY,
GLOBAL DETAILING, INC.
JOB # 11-372

NO	DATE	ISSUES OR REVISIONS	BY
1	Aug 18 2011	FAB	TDB
0	Aug 3 2011	FOR APPROVAL	TDB

Global Detailing, Inc

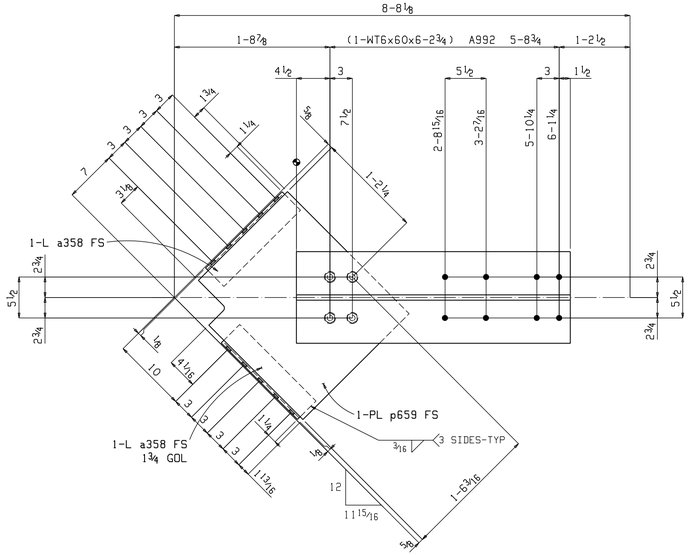

2 HORIZONTAL BRACES 2130HB1

W | 6 9/16 x 11/16
F | 12 5/16 x 1 1/8

SHOP NOTE:
TOE DIRECTION NEAR SIDE

SHOP BOLTS:
4-3/4x2 3/4 A490N

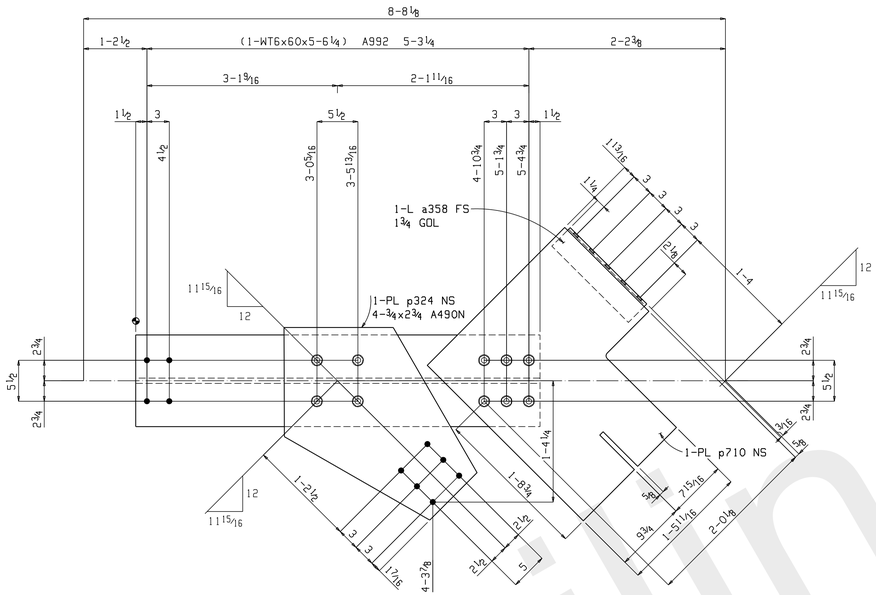

2 HORIZONTAL BRACES 2130HB2

W | 6 9/16 x 11/16
F | 12 5/16 x 1 1/8

SHOP NOTE:
TOE DIRECTION FAR SIDE

SHOP BOLTS (Unless Noted):
6-3/4x2 3/4 A325N

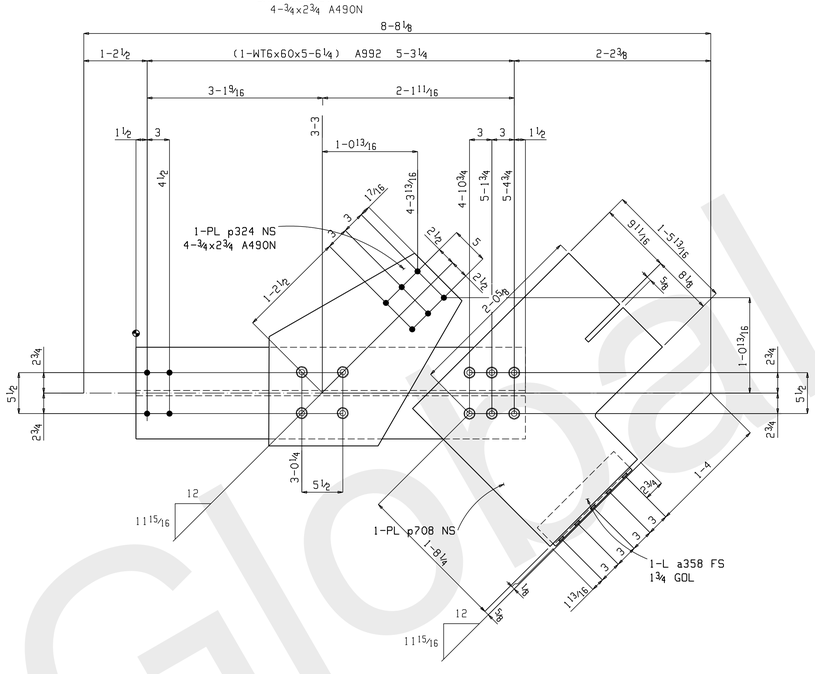

2 HORIZONTAL BRACES 2130HB3

W | 6 9/16 x 11/16
F | 12 5/16 x 1 1/8

SHOP NOTE:
TOE DIRECTION FAR SIDE

SHOP BOLTS (Unless Noted):
6-3/4x2 3/4 A325N

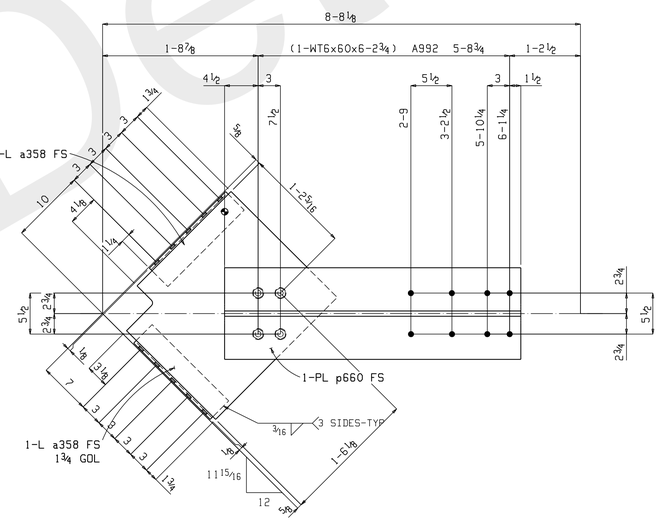

2 HORIZONTAL BRACES 2130HB4

W | 6 9/16 x 11/16
F | 12 5/16 x 1 1/8

SHOP NOTE:
TOE DIRECTION NEAR SIDE

SHOP BOLTS:
4-3/4x2 3/4 A490N

BILL OF MATERIAL

NO REQ	MARK NO	ASSY MARK	DESCRIPTION	LENGTH		REMARKS	WEIGHT TOTAL
2	2130HB1		HORIZONTAL BRACE				917
2		2130HB1	WT6x60	6	2 3/4	A992	748
4		a358	L3 1/2x3x5/16	1	2 1/2	A36	32
2		p659	PL 1/2x20 1/8	1	11 1/8	A36	132
8			3/4 Dia A490N	0	2 3/4	1HD WASH	6
2	2130HB2		HORIZONTAL BRACE				1101
2		2130HB2	WT6x60	5	6 1/4	A992	663
2		a358	L3 1/2x3x5/16	1	2 1/2	A36	16
2		p710	PL 1/2x26 1/8	2	5 9/16	A36	219
2		p324	PL 1/2x20 11/16	2	8 1/8	A36	188
8			3/4 Dia A490N	0	2 3/4	1HD WASH	6
12			3/4 Dia A325N	0	2 3/4	1HD WASH	9
			FIELD BOLTS				
12			3/4 Dia A490N	0	2	1HD WASH	
2	2130HB3		HORIZONTAL BRACE				1101
2		2130HB3	WT6x60	5	6 1/4	A992	663
2		a358	L3 1/2x3x5/16	1	2 1/2	A36	16
2		p708	PL 1/2x26 1/8	2	5 9/16	A36	219
2		p324	PL 1/2x20 11/16	2	8 1/8	A36	188
8			3/4 Dia A490N	0	2 3/4	1HD WASH	6
12			3/4 Dia A325N	0	2 3/4	1HD WASH	9
			FIELD BOLTS				
6			3/4 Dia A490N	0	2 1/2	1HD WASH	
2	2130HB4		HORIZONTAL BRACE				917
2		2130HB4	WT6x60	6	2 3/4	A992	748
4		a358	L3 1/2x3x5/16	1	2 1/2	A36	32
2		p660	PL 1/2x20 1/8	1	11 1/8	A36	132
8			3/4 Dia A490N	0	2 3/4	1HD WASH	6

SHOP NOTES:

HOLES: 13/16" Dia U.N.O
SURFACE PREP: SSPC-SP 2
FINISH: 1 S/C EPOXY PRIMER (SW)
1 F/C HP EPOXY (SW)
ELECTRODES: E70XX - (LOW HYDROGEN)

JOB NAME: THE LUBRIZOL CORP
CUSTOMER: CHEMSTRESS CONSTRUCTION
JOB#: 11-509
DESCRIPTION: DRYER FRAMING DETAILS

SCALE	DRAWN BY	CHECK	Q.K.
1 1/4=12"	MC	-	-

FormulaFabricating LLC
5200 W. 164th. Street o Brook Park, Ohio 44142
Phone 216-898-5788 o Fax 216-898-5898
formulafabricating.com

DATE: 7.20.11 SHEET: 2130

NO	DATE	ISSUES OR REVISIONS	BY
1	Aug 18 2011	FAB	TDB
0	Aug 3 2011	FOR APPROVAL	TDB

DRAWINGS PREPARED BY, GLOBAL DETAILING, INC. JOB # 11-372

Global Detailing Inc

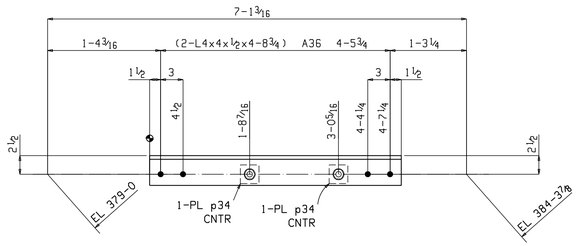

4 VERTICAL BRACES 2131VB1

SHOP BOLTS:
2-3/4x3 A490N

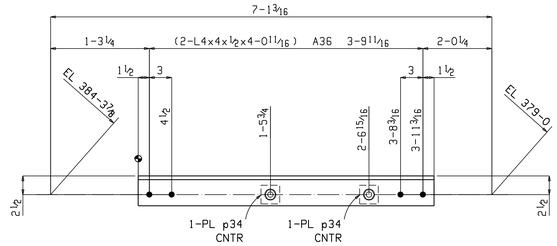

2 VERTICAL BRACES 2131VB2

SHOP BOLTS:
2-3/4x3 A490N

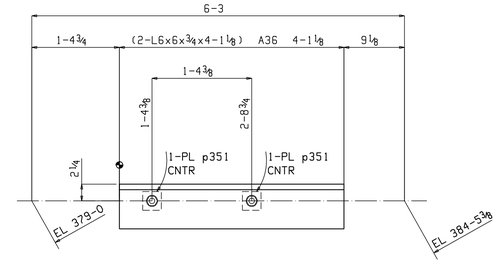

4 VERTICAL BRACES 2131VB3

SHOP BOLTS:
2-3/4x3 A490N

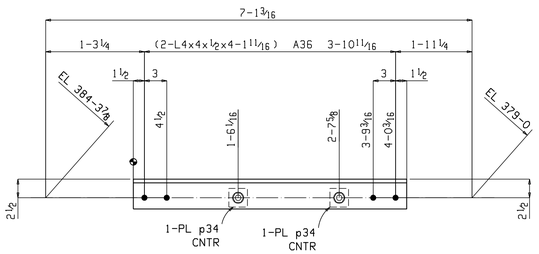

2 VERTICAL BRACES 2131VB4

SHOP BOLTS:
2-3/4x3 A490N

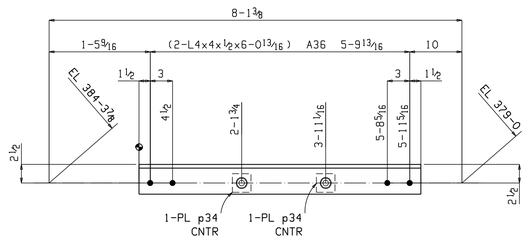

3 VERTICAL BRACES 2131VB5

SHOP BOLTS:
2-3/4x3 A490N

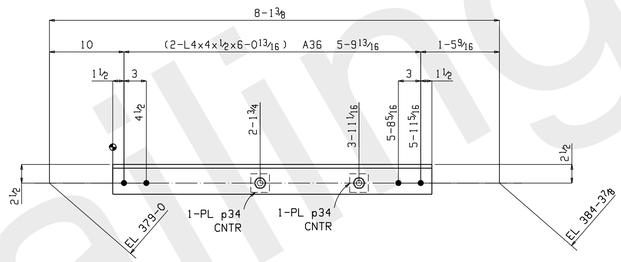

3 VERTICAL BRACES 2131VB6

SHOP BOLTS:
2-3/4x3 A490N

BILL OF MATERIAL

NO REQ	MARK NO	ASSY MARK	DESCRIPTION	LENGTH		REMARKS	WEIGHT TOTAL
4	2131VB1		VERTICAL BRACE				501
4		2131VB1L	L4x4x1/2	4	8 3/4	A36	242
4		2131VB1R	L4x4x1/2	4	8 3/4	A36	242
8		p34	PL3/4x2 1/2	0	2 1/2	A36	11
8			3/4 Dia A490N	0	3	1HD WASH	6
4	2131VB3		VERTICAL BRACE				951
4		2131VB3L	L6x6x3/4	4	1 1/8	A36	470
4		2131VB3R	L6x6x3/4	4	1 1/8	A36	470
8		p351	PL3/8x2 1/2	0	2 1/2	A36	5
8			3/4 Dia A490N	0	3	1HD WASH	6
3	2131VB5		VERTICAL BRACE				479
3		2131VB5L	L4x4x1/2	6	0 13/16	A36	233
3		2131VB5R	L4x4x1/2	6	0 13/16	A36	233
6		p34	PL3/4x2 1/2	0	2 1/2	A36	8
6			3/4 Dia A490N	0	3	1HD WASH	5
3	2131VB6		VERTICAL BRACE				479
3		2131VB6L	L4x4x1/2	6	0 13/16	A36	233
3		2131VB6R	L4x4x1/2	6	0 13/16	A36	233
6		p34	PL3/4x2 1/2	0	2 1/2	A36	8
6			3/4 Dia A490N	0	3	1HD WASH	5
2	2131VB2		VERTICAL BRACE				216
2		2131VB2L	L4x4x1/2	4	0 11/16	A36	104
2		2131VB2R	L4x4x1/2	4	0 11/16	A36	104
4		p34	PL3/4x2 1/2	0	2 1/2	A36	5
4			3/4 Dia A490N	0	3	1HD WASH	3
2	2131VB4		VERTICAL BRACE				220
2		2131VB4L	L4x4x1/2	4	1 11/16	A36	106
2		2131VB4R	L4x4x1/2	4	1 11/16	A36	106
4		p34	PL3/4x2 1/2	0	2 1/2	A36	5
4			3/4 Dia A490N	0	3	1HD WASH	3

SHOP NOTES:

HOLES: 13/16" Dia U.N.O
SURFACE PREP: SSPC-SP 2
FINISH: 1 S/C EPOXY PRIMER (SW)
1 F/C HP EPOXY (SW)
ELECTRODES: E70XX - (LOW HYDROGEN)

JOB NAME: THE LUBRIZOL CORP
CUSTOMER: CHEMSTRESS CONSTRUCTION
JOB#: 11-509
DESCRIPTION: DRYER FRAMING DETAILS

SCALE	DRAWN BY	CHECK	O.K.
1 1/4=12"	MC	-	-

FormulaFabricating LLC
5200 W. 164th. Street o Brook Park, Ohio 44142
Phone 216-898-5788 o Fax 216-898-5898
formulafabricating.com

DATE: 7.20.11 SHEET: 2131

DRAWINGS PREPARED BY,
GLOBAL DETAILING, INC.
JOB # 11-372

NO	DATE	ISSUES OR REVISIONS	BY
1	Aug 18 2011	FAB	TDB
0	Aug 3 2011	FOR APPROVAL	TDB

Global Detailing, Inc

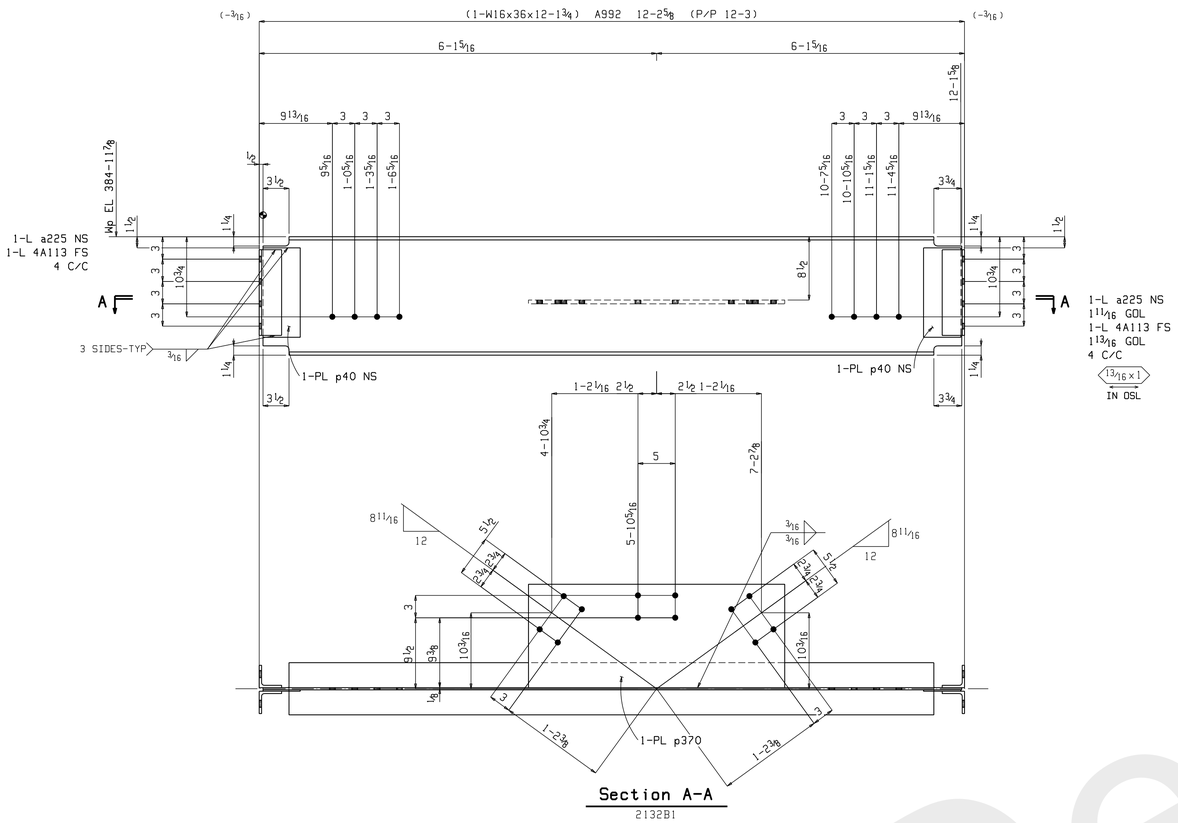

Section A-A

2132B1

ONE BEAM 2132B1

W	15⅞x5/16
F	7x7/16

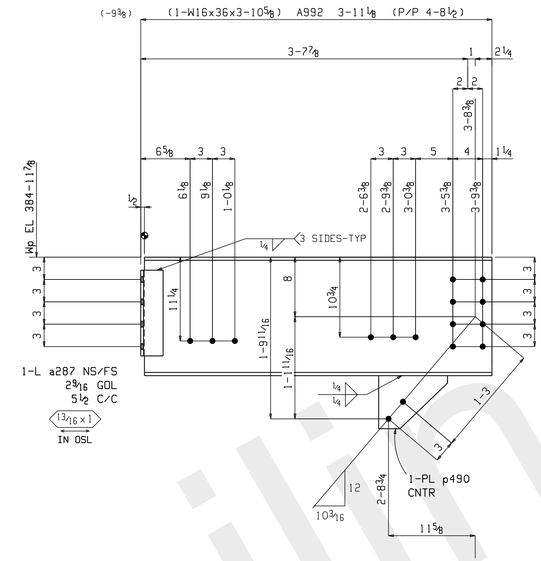

2 BEAMS 2132B2

W	15⅞x3/16
F	7x7/16

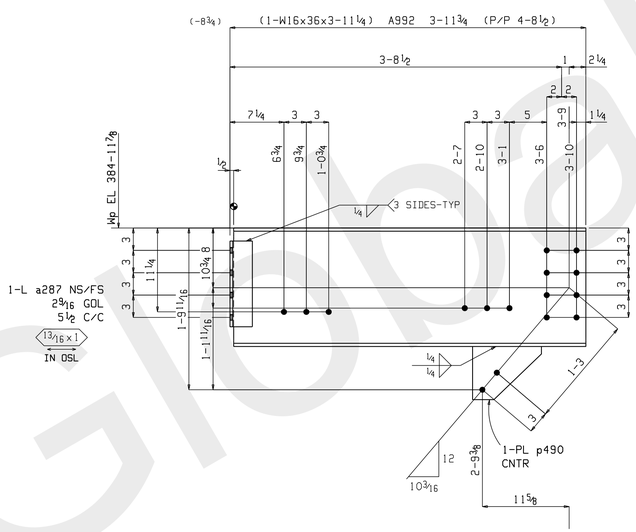

2 BEAMS 2132B3

W	15⅞x5/16
F	7x7/16

BILL OF MATERIAL

NO REQ	MARK NO	ASSY MARK	DESCRIPTION	LENGTH		REMARKS	WEIGHT TOTAL
ONE	2132B1		BEAM				535
1		2132B1	W16x36	12	1¾	A992	437
2		a225	L3x3x5/16	0	11½	A36	12
2		4A113	L3x3x5/16	0	11½	A36	12
1		p370	PL½x13⅞	2	10⅜	A36	68
2		p40	PL3/16x5	1	0	A36	6
			FIELD BOLTS				
16			¾ Dia A325N	0	1¾	1HD WASH	
2	2132B2		BEAM				340
2		2132B2	W16x36	3	10⅝	A992	280
4		a287	L4x3x⅜	0	11½	A36	33
2		p490	PL¾x7⅛	0	9¼	A36	28
			FIELD BOLTS				
4			¾ Dia A490N	0	3	1HD WASH	
28			¾ Dia A490N	0	1¾	1HD WASH	
2	2132B3		BEAM				344
2		2132B3	W16x36	3	11¼	A992	284
4		a287	L4x3x⅜	0	11½	A36	33
2		p490	PL¾x7⅛	0	9¼	A36	28
			FIELD BOLTS				
4			¾ Dia A490N	0	3	1HD WASH	
28			¾ Dia A490N	0	1¾	1HD WASH	

SHOP NOTES:
HOLES: 13/16" Dia U.N.O
SURFACE PREP: SSPC-SP 2
FINISH: 1 S/C EPOXY PRIMER (SW)
1 F/C HP EPOXY (SW)
ELECTRODES: E70XX - (LOW HYDROGEN)

JOB NAME: THE LUBRIZOL CORP
CUSTOMER: CHEMSTRESS CONSTRUCTION
JOB#: 11-509
DESCRIPTION: DRYER FRAMING DETAILS

SCALE	DRAWN BY	CHECK	O.K.
1¼=12"	MC	-	-

FormulaFabricating LLC
5200 W. 164th. Street ▫ Brook Park, Ohio 44142
Phone 216-898-5788 ▫ Fax 216-898-5898
formulafabricating.com

DATE: 7.20.11 SHEET: 2132

DRAWINGS PREPARED BY, GLOBAL DETAILING, INC. JOB # 11-372

NO	DATE	ISSUES OR REVISIONS	BY
1	Aug 18 2011	FAB	TDB
0	Aug 3 2011	FOR APPROVAL	TDB

Global Detailing, Inc

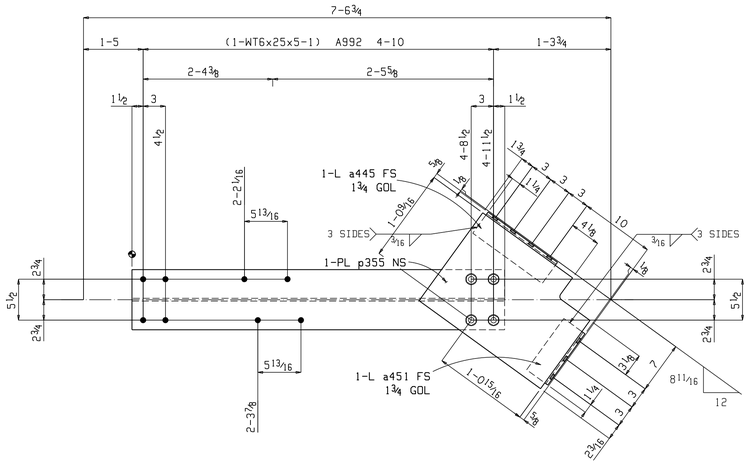

2 HORIZONTAL BRACES 2133BH1

W | 6⅛x⅜
F | 8 1/16x⅝

SHOP NOTE:
TOE DIRECTION FAR SIDE

SHOP BOLTS:
4-¾x2¼ A490N

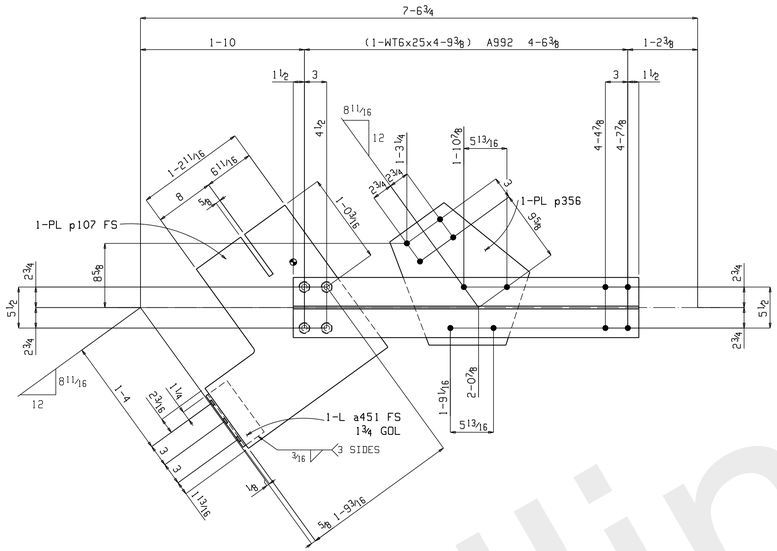

ONE HORIZONTAL BRACE 2133HB2

W | 6⅛x⅜
F | 8 1/16x⅝

SHOP NOTE:
TOE DIRECTION NEAR SIDE

SHOP BOLTS:
4-¾x2¼ A490N

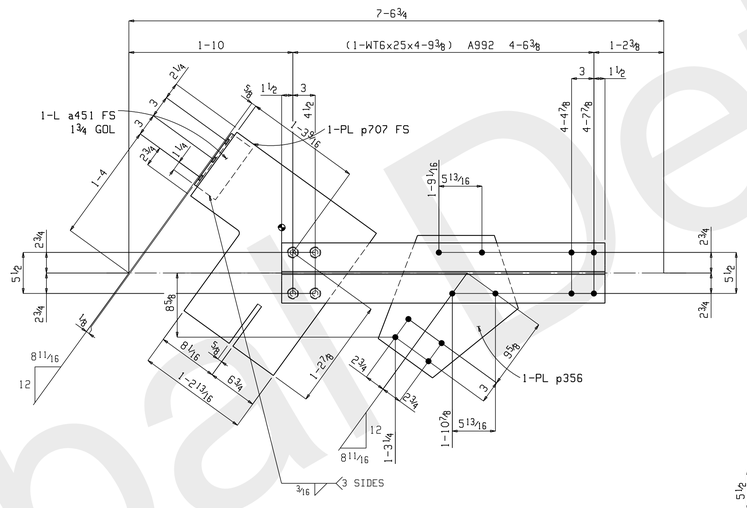

ONE HORIZONTAL BRACE 2133HB4

W | 6⅛x⅜
F | 8 1/16x⅝

SHOP NOTE:
TOE DIRECTION NEAR SIDE

SHOP BOLTS:
4-¾x2¼ A490N

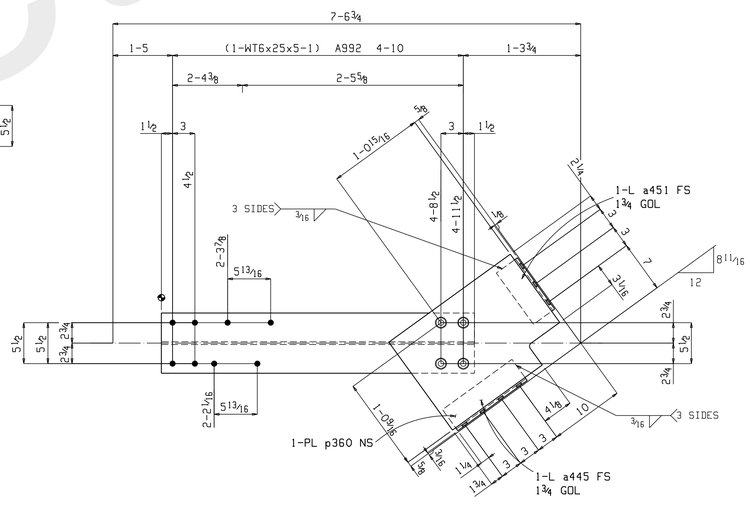

ONE HORIZONTAL BRACE 2133HB5

W | 6⅛x⅜
F | 8 1/16x⅝

SHOP NOTE:
TOE DIRECTION FAR SIDE

SHOP BOLTS:
4-¾x2¼ A490N

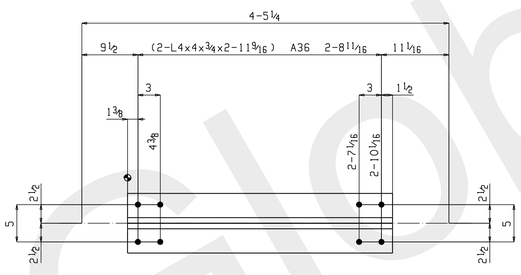

2 HORIZONTAL BRACES 2133HB3

BILL OF MATERIAL

NO REQ	MARK NO	ASSY MARK	DESCRIPTION	LENGTH		REMARKS	WEIGHT TOTAL
2	2133BH1		HORIZONTAL BRACE				365
2		2133BH1	WT6x25	5	1	A992	254
2		a445	L3½x3x5/16	0	11½	A36	13
2		a451	L3½x3x5/16	0	8½	A36	9
2		p355	PL½x14 9/16	1	8⅛	A36	83
8			¾ Dia A490N	0	2¼	1HD WASH	5
ONE	2133HB2		HORIZONTAL BRACE				252
1		2133HB2	WT6x25	4	9⅜	A992	120
1		a451	L3½x3x5/16	0	8½	A36	5
1		p107	PL½x23⅛	1	11 9/16	A36	77
1		p356	PL½x16 11/16	1	8⅜	A36	48
4			¾ Dia A490N	0	2¼	1HD WASH	3
			FIELD BOLTS				
4			¾ Dia A325N	0	2½	1HD WASH	
4			¾ Dia A490N	0	2½	1HD WASH	
2	2133HB3		HORIZONTAL BRACE				219
2		2133HB3L	L4x4x¾	2	11 9/16	A36	110
2		2133HB3R	L4x4x¾	2	11 9/16	A36	110
			FIELD BOLTS				
4			¾ Dia A325N	0	2½	1HD WASH	
ONE	2133HB4		HORIZONTAL BRACE				252
1		2133HB4	WT6x25	4	9⅜	A992	120
1		a451	L3½x3x5/16	0	8½	A36	5
1		p707	PL½x23⅛	1	11 9/16	A36	77
1		p356	PL½x16 11/16	1	8⅜	A36	48
4			¾ Dia A490N	0	2¼	1HD WASH	3
			FIELD BOLTS				
4			¾ Dia A325N	0	2½	1HD WASH	
4			¾ Dia A490N	0	2½	1HD WASH	
ONE	2133HB5		HORIZONTAL BRACE				182
1		2133HB5	WT6x25	5	1	A992	127
1		a445	L3½x3x5/16	0	11½	A36	6
1		a451	L3½x3x5/16	0	8½	A36	5
1		p360	PL½x14 9/16	1	8⅛	A36	42
4			¾ Dia A490N	0	2¼	1HD WASH	3

SHOP NOTES:
HOLES: 13/16" Dia U.N.O
SURFACE PREP: SSPC-SP 2
FINISH: 1 S/C EPOXY PRIMER (SW)
1 F/C HP EPOXY (SW)
ELECTRODES: E70XX - (LOW HYDROGEN)

JOB NAME: THE LUBRIZOL CORP
CUSTOMER: CHEMSTRESS CONSTRUCTION
JOB#: 11-509
DESCRIPTION: DRYER FRAMING DETAILS

SCALE	DRAWN BY	CHECK	O.K.
1¼=12"	MC	-	-

FormulaFabricating LLC
5200 W. 164th. Street o Brook Park, Ohio 44142
Phone 216-898-5788 o Fax 216-898-5898
formulafabricating.com

DATE: 7.20.11 SHEET: 2133

DRAWINGS PREPARED BY,
GLOBAL DETAILING, INC.
JOB # 11-372

NO	DATE	ISSUES OR REVISIONS	BY
1	Aug 18 2011	FAB	TDB
0	Aug 3 2011	FOR APPROVAL	TDB

Global Detailing, Inc

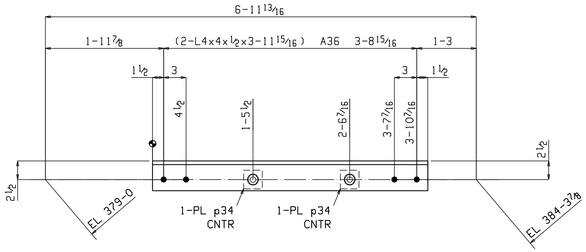

2 VERTICAL BRACES 2134VB1

SHOP BOLTS:
2-3/4x3 A490N

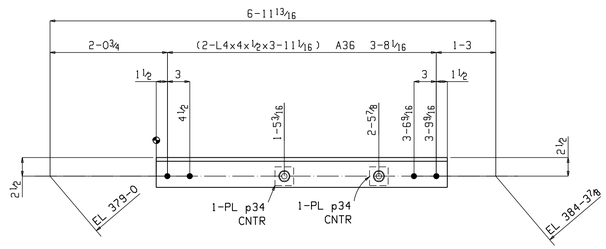

2 VERTICAL BRACES 2134VB2

SHOP BOLTS:
2-3/4x3 A490N

BILL OF MATERIAL

NO REQ	MARK NO	ASSY MARK	DESCRIPTION	LENGTH		REMARKS	WEIGHT TOTAL
2	2134VB1		VERTICAL BRACE				213
2		2134VB1L	L4x4x1/2	3	11 15/16	A36	102
2		2134VB1R	L4x4x1/2	3	11 15/16	A36	102
4		p34	PL3/4x2 1/2	0	2 1/2	A36	5
4			3/4 Dia A490N	0	3	1HD WASH	3
2	2134VB2		VERTICAL BRACE				209
2		2134VB2L	L4x4x1/2	3	11 1/16	A36	100
2		2134VB2R	L4x4x1/2	3	11 1/16	A36	100
4		p34	PL3/4x2 1/2	0	2 1/2	A36	5
4			3/4 Dia A490N	0	3	1HD WASH	3

SHOP NOTES:

HOLES: 13/16" Dia U.N.O
SURFACE PREP: SSPC-SP 2
FINISH: 1 S/C EPOXY PRIMER (SW)
1 F/C HP EPOXY (SW)
ELECTRODES: E70XX - (LOW HYDROGEN)

JOB NAME: THE LUBRIZOL CORP
CUSTOMER: CHEMSTRESS CONSTRUCTION
JOB#: 11-509
DESCRIPTION: DRYER FRAMING DETAILS

SCALE	DRAWN BY	CHECK	O.K.
1 1/4=12"	MC	-	-

FormulaFabricating LLC
5200 W. 164th. Street • Brook Park, Ohio 44142
Phone 216-898-5788 • Fax 216-898-5898
formulafabricating.com

DATE: 7.20.11 SHEET: 2134

DRAWINGS PREPARED BY,
GLOBAL DETAILING, INC.
JOB # 11-372

NO	DATE	ISSUES OR REVISIONS	BY
1	Aug 19 2011	FAB	TDB
0	Aug 3 2011	FOR APPROVAL	TDB

Global Detailing, Inc

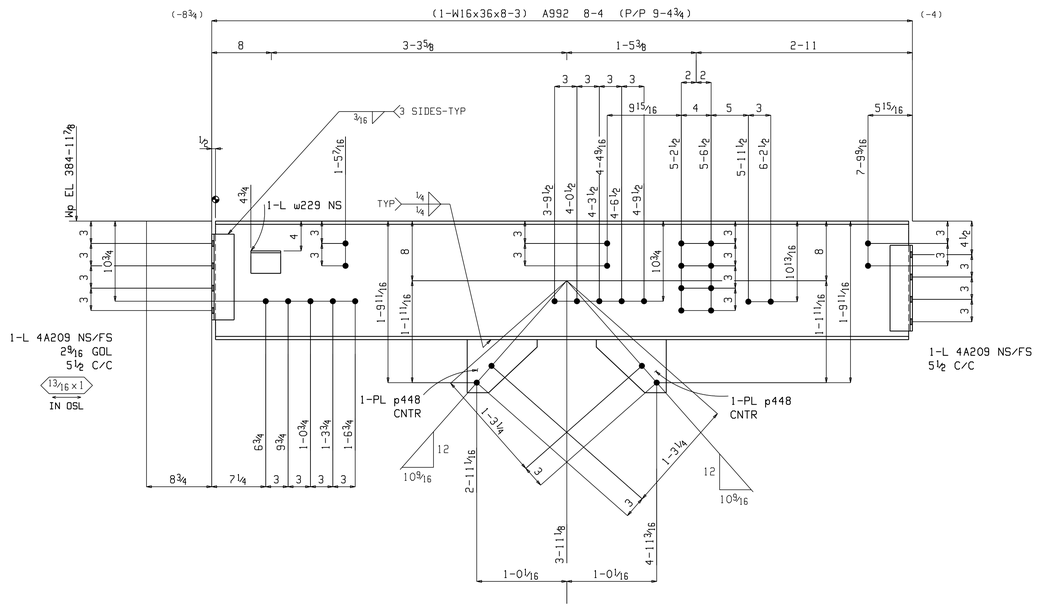

ONE BEAM 2135B1

W | 15⅞x5⁄16
F | 7x7⁄16

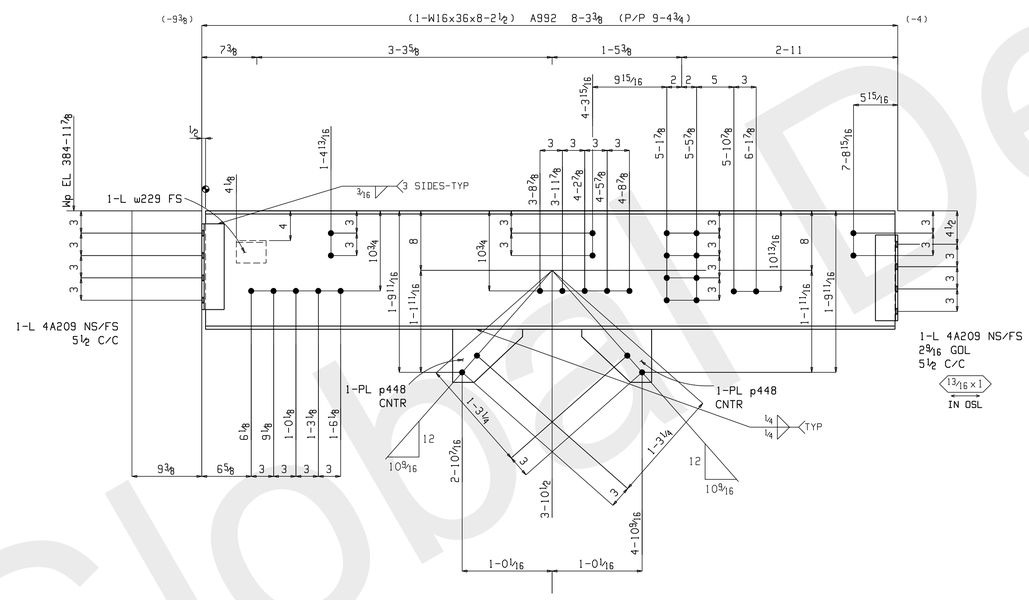

ONE BEAM 2135B2

W | 15⅞x5⁄16
F | 7x7⁄16

BILL OF MATERIAL

NO REQ	MARK NO	ASSY MARK	DESCRIPTION	LENGTH		REMARKS	WEIGHT TOTAL
ONE	2135B1		BEAM				355
1		2135B1	W16x36	8	3	A992	297
4		4A209	L4x3x5⁄16	0	11½	A36	28
1		w229	L4x3x¼	0	4	A36	2
2		p448	PL¾x7⅛	0	9⅜	A36	28
			FIELD BOLTS				
4			¾ Dia A490N	0	3	1HD WASH	
11			¾ Dia A325N	0	1¾	1HD WASH	
15			¾ Dia A490N	0	1¾	1HD WASH	
ONE	2135B2		BEAM				353
1		2135B2	W16x36	8	2½	A992	296
4		4A209	L4x3x5⁄16	0	11½	A36	28
1		w229	L4x3x¼	0	4	A36	2
2		p448	PL¾x7⅛	0	9⅜	A36	28
			FIELD BOLTS				
4			¾ Dia A490N	0	3	1HD WASH	
11			¾ Dia A325N	0	1¾	1HD WASH	
15			¾ Dia A490N	0	1¾	1HD WASH	

SHOP NOTES:
HOLES: 13⁄16" Dia U.N.O
SURFACE PREP: SSPC-SP 2
FINISH: 1 S/C EPOXY PRIMER (SW)
1 F/C HP EPOXY (SW)
ELECTRODES: E70XX - (LOW HYDROGEN)

JOB NAME: THE LUBRIZOL CORP
CUSTOMER: CHEMSTRESS CONSTRUCTION
JOB#: 11-509
DESCRIPTION: DRYER FRAMING DETAILS

SCALE	DRAWN BY	CHECK	O.K.
1¼=12"	MC	-	-

FormulaFabricating LLC
5200 W. 164th. Street o Brook Park, Ohio 44142
Phone 216-898-5788 o Fax 216-898-5898
formulafabricating.com

DATE: 7.20.11 SHEET: 2135

DRAWINGS PREPARED BY, GLOBAL DETAILING, INC. JOB # 11-372

NO	DATE	ISSUES OR REVISIONS	BY
1	Aug 18 2011	FAB	TDB
0	Aug 3 2011	FOR APPROVAL	TDB

Global Detailing, Inc

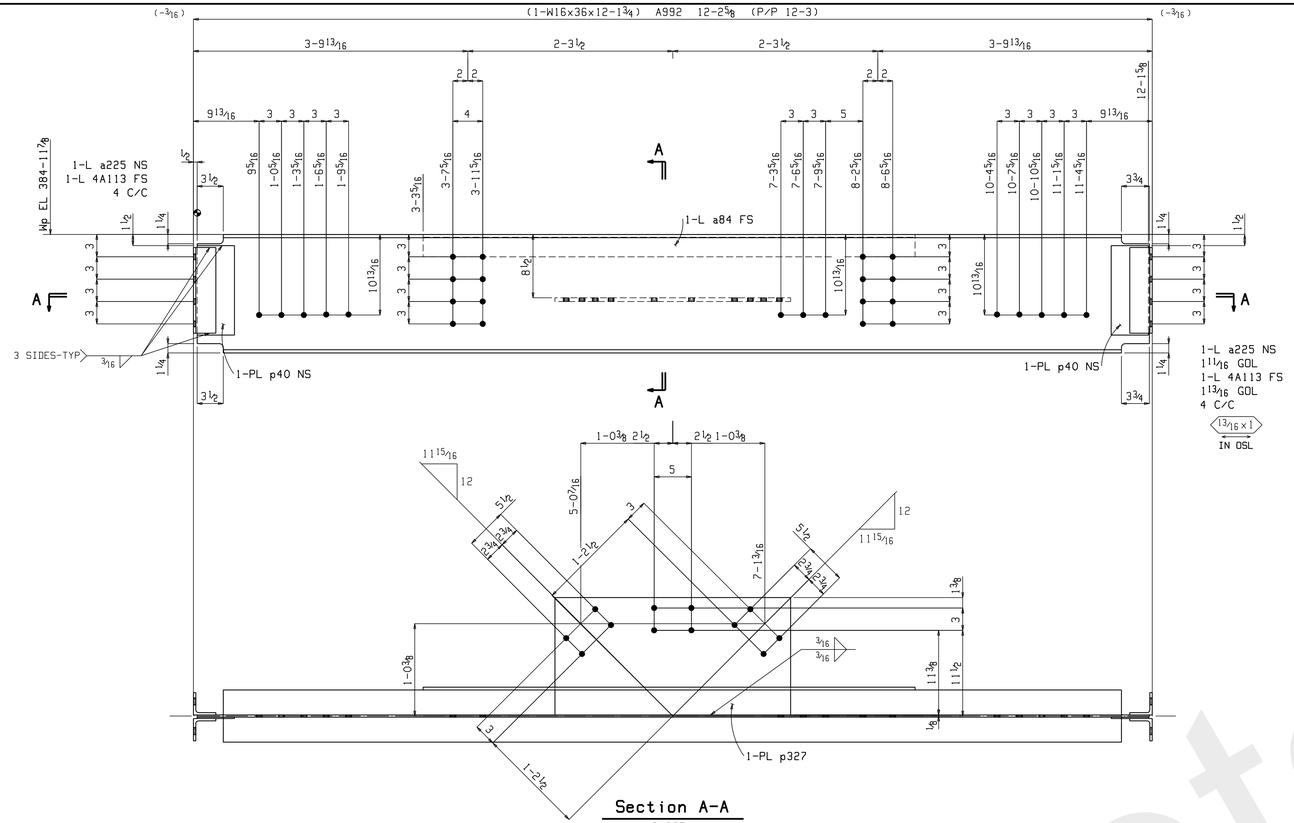

ONE BEAM 2136B1

W 15 7/8 x 5/16
F 7 x 7/16

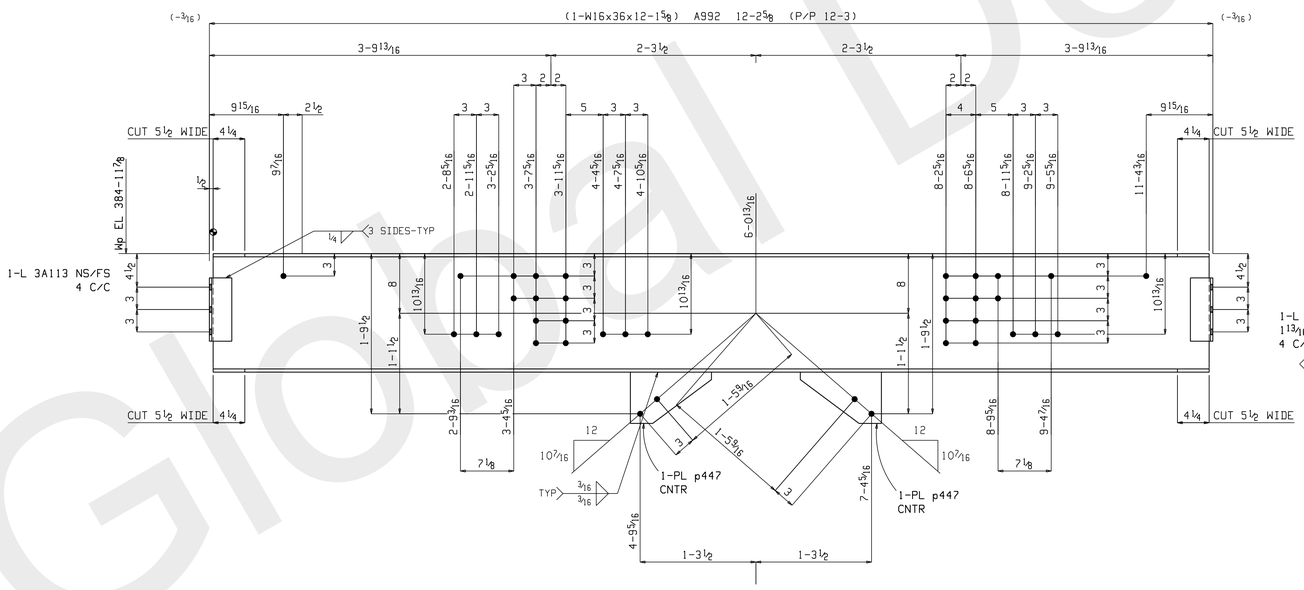

ONE BEAM 2136B2

W 15 7/8 x 5/16
F 7 x 7/16

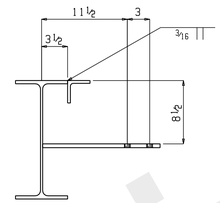

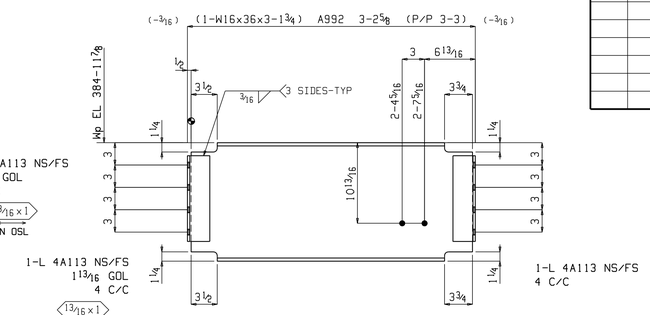

ONE BEAM 2136B3

W 15 7/8 x 5/16
F 7 x 7/16

BILL OF MATERIAL

NO REQ	MARK NO	ASSY MARK	DESCRIPTION	LENGTH		REMARKS	WEIGHT TOTAL
ONE	2136B1		BEAM				578
1		2136B1	W16x36	12	1 3/4	A992	437
1		a84	L3x3x3/8	5	7	A36	40
2		a225	L3x3x5/16	0	11 1/2	A36	12
2		4A113	L3x3x5/16	0	11 1/2	A36	12
1		p327	PL 1/2x15 3/4	2	7 5/8	A36	71
2		p40	PL 3/16x5	1	0	A36	6
			FIELD BOLTS				
8			3/4 Dia A325N	0	2 3/4	1HD WASH	
6			3/4 Dia A490N	0	2	1HD WASH	
4			3/4 Dia A325N	0	2	1HD WASH	
23			3/4 Dia A490N	0	1 3/4	1HD WASH	
ONE	2136B2		BEAM				486
1		2136B2	W16x36	12	1 5/8	A992	437
4		3A113	L3x3x5/16	0	8 1/2	A36	17
2		p447	PL 3/4x6 7/8	0	10 7/8	A36	32
			FIELD BOLTS				
4			3/4 Dia A490N	0	3	1HD WASH	
4			3/4 Dia A325N	0	1 3/4	1HD WASH	
25			3/4 Dia A490N	0	1 3/4	1HD WASH	
ONE	2136B3		BEAM				137
1		2136B3	W16x36	3	1 3/4	A992	113
4		4A113	L3x3x5/16	0	11 1/2	A36	23
			FIELD BOLTS				
2			3/4 Dia A490N	0	2	1HD WASH	

SHOP NOTES:
HOLES: 13/16" Dia U.N.O
SURFACE PREP: SSPC-SP 2
FINISH: 1 S/C EPOXY PRIMER (SW)
1 F/C HP EPOXY (SW)
ELECTRODES: E70XX - (LOW HYDROGEN)

JOB NAME: THE LUBRIZOL CORP
CUSTOMER: CHEMSTRESS CONSTRUCTION
JOB#: 11-509
DESCRIPTION: DRYER FRAMING DETAILS

SCALE	DRAWN BY	CHECK	O.K.
1 1/4=12"	MC	-	-

FormulaFabricating LLC
5200 W. 164th. Street • Brook Park, Ohio 44142
Phone 216-898-5788 • Fax 216-898-5838
formulafabricating.com

DATE: 7.20.11 SHEET: 2136

NO	DATE	ISSUES OR REVISIONS	BY
0	Aug 3 2011	FOR APPROVAL	TDB

DRAWINGS PREPARED BY, GLOBAL DETAILING, INC. JOB # 11-372

Global Detailing, Inc

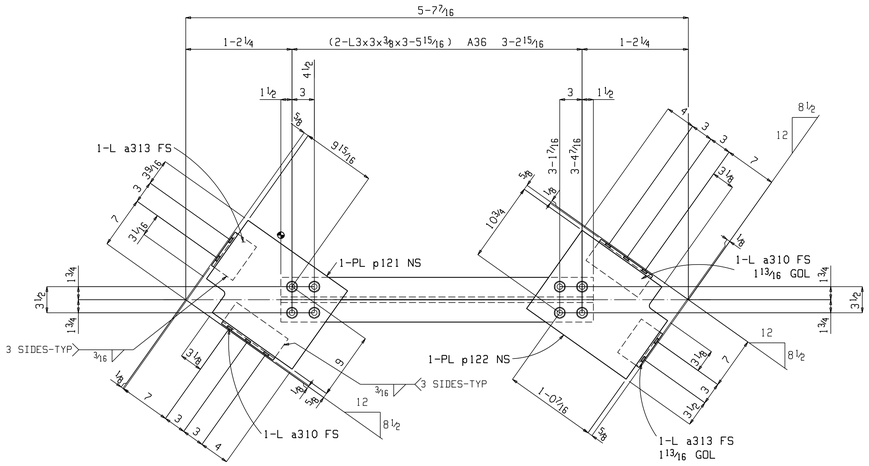

2 HORIZONTAL BRACES 2137HB1

SHOP BOLTS:
8-3/4x2 A490N

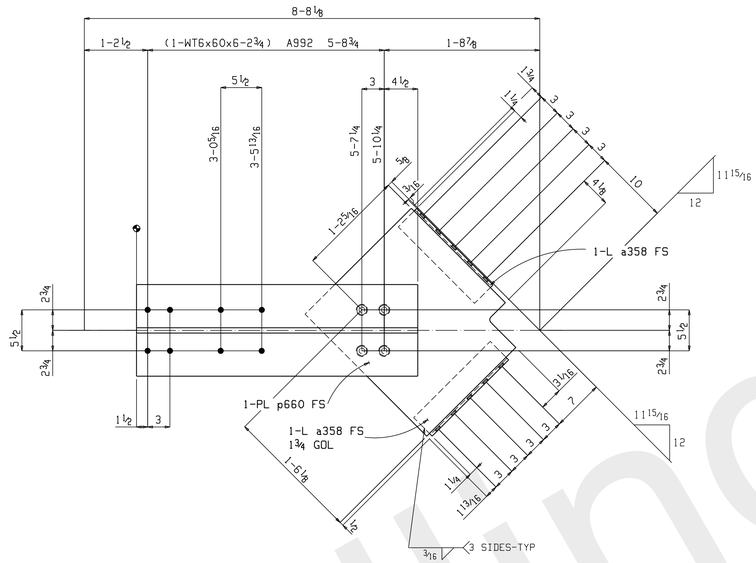

ONE HORIZONTAL BRACE 2137HB2

W	6 9/16 x 11/16
F	12 5/16 x 1 1/8

SHOP NOTE:
TOE DIRECTION NEAR SIDE

SHOP BOLTS:
4-3/4x2 3/4 A490N

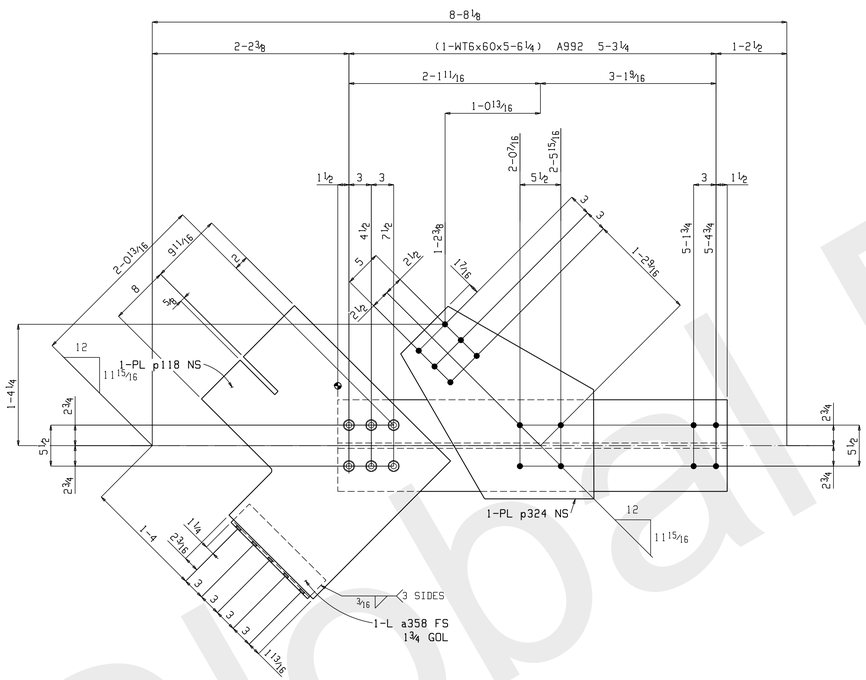

ONE HORIZONTAL BRACE 2137HB3

W	6 9/16 x 11/16
F	12 5/16 x 1 1/8

SHOP NOTE:
TOE DIRECTION FAR SIDE

SHOP BOLTS:
6-3/4x2 3/4 A325N

BILL OF MATERIAL

NO REQ	MARK NO	ASSY MARK	DESCRIPTION	LENGTH		REMARKS	WEIGHT TOTAL
2	2137HB1		HORIZONTAL BRACE				231
2		2137HB1L	L3x3x3/8	3	5 15/16	A36	50
2		2137HB1R	L3x3x3/8	3	5 15/16	A36	50
4		a310	L3 1/2x3x5/16	0	8 1/2	A36	19
4		a313	L3 1/2x3x5/16	0	5 1/2	A36	12
2		p121	PL3/8x12 7/8	1	4 3/8	A36	45
2		p122	PL3/8x12 7/8	1	4 3/8	A36	45
16			3/4 Dia A490N	0	2	1HD WASH	10
ONE	2137HB2		HORIZONTAL BRACE				459
1		2137HB2	WT6x60	6	2 3/4	A992	374
2		a358	L3 1/2x3x5/16	1	2 1/2	A36	16
1		p660	PL1/2x20 1/8	1	11 1/8	A36	66
4			3/4 Dia A490N	0	2 3/4	1HD WASH	3
ONE	2137HB3		HORIZONTAL BRACE				547
1		2137HB3	WT6x60	5	6 1/4	A992	331
1		a358	L3 1/2x3x5/16	1	2 1/2	A36	8
1		p118	PL1/2x26 1/8	2	5 9/16	A36	110
1		p324	PL1/2x20 11/16	2	8 1/8	A36	94
6			3/4 Dia A325N	0	2 3/4	1HD WASH	4
			FIELD BOLTS				
4			3/4 Dia A325N	0	3 3/4	1HD WASH	
6			3/4 Dia A490N	0	2	1HD WASH	

SHOP NOTES:
HOLES: 13/16" Dia U.N.O
SURFACE PREP: SSPC-SP 2
FINISH: 1 S/C EPOXY PRIMER (SW)
1 F/C HP EPOXY (SW)
ELECTRODES: E70XX - (LOW HYDROGEN)

JOB NAME: THE LUBRIZOL CORP
CUSTOMER: CHEMSTRESS CONSTRUCTION
JOB#: 11-509
DESCRIPTION: DRYER FRAMING DETAILS

SCALE	DRAWN BY	CHECK	O.K.
1 1/4=12"	MC	-	-

FormulaFabricating LLC
5200 W. 164th. Street o Brook Park, Ohio 44142
Phone 216-898-5788 o Fax 216-898-5898
formulafabricating.com

DATE: 7.20.11 SHEET: 2137

DRAWINGS PREPARED BY,
GLOBAL DETAILING, INC.
JOB # 11-372

NO	DATE	ISSUES OR REVISIONS	BY
1	Aug 18 2011	FAB	TDB
0	Aug 3 2011	FOR APPROVAL	TDB

Global Detailing Inc

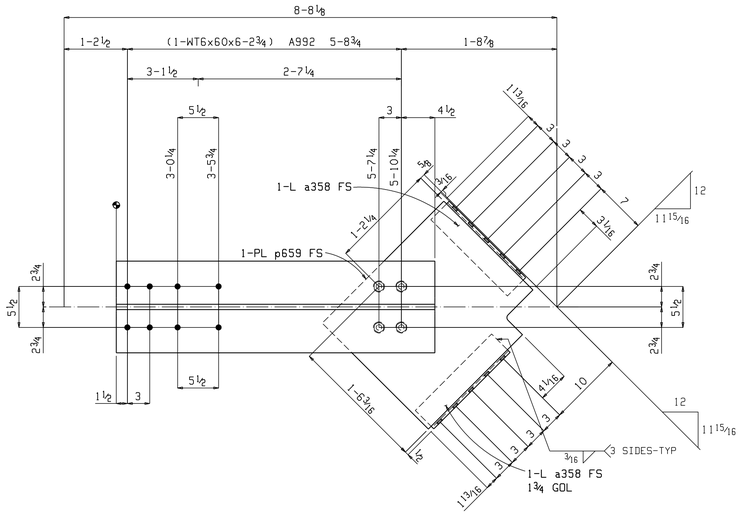

ONE HORIZONTAL BRACE 2138HB1

W | 6 9/16 x 11/16
F | 12 5/16 x 1 1/8

SHOP NOTE:
TOE DIRECTION NEAR SIDE

SHOP BOLTS:
4-3/4x2 3/4 A490N

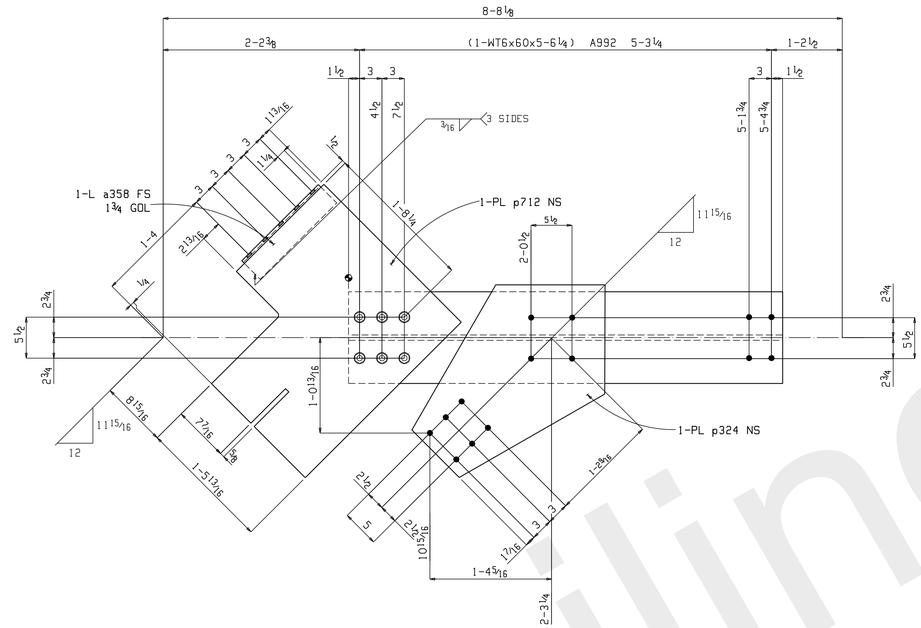

ONE HORIZONTAL BRACE 2138HB2

W | 6 9/16 x 11/16
F | 12 5/16 x 1 1/8

SHOP NOTE:
TOE DIRECTION FAR SIDE

SHOP BOLTS:
6-3/4x2 3/4 A325N

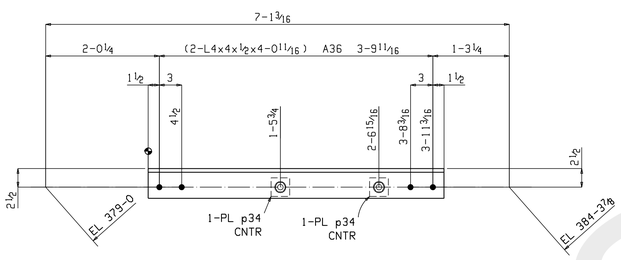

ONE VERTICAL BRACE 2138VB1

SHOP BOLTS:
2-3/4x3 A490N

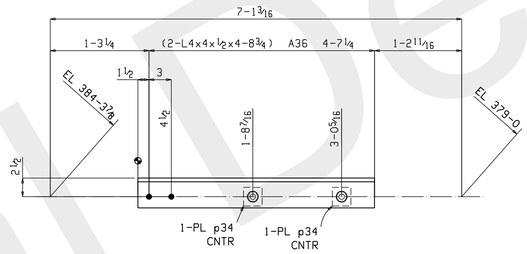

2 VERTICAL BRACES 2138VB2

SHOP BOLTS:
2-3/4x2 1/4 A490N

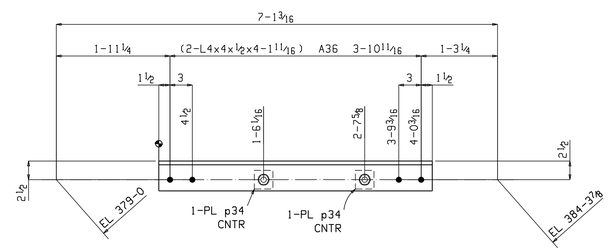

ONE VERTICAL BRACE 2138VB3

SHOP BOLTS:
2-3/4x3 A490N

BILL OF MATERIAL

NO REQ	MARK NO	ASSY MARK	DESCRIPTION	LENGTH		REMARKS	WEIGHT TOTAL
ONE	2138HB1		HORIZONTAL BRACE				459
1		2138HB1	WT6x60	6	2 3/4	A992	374
2		a358	L3 1/2x3x5/16	1	2 1/2	A36	16
1		p659	PL 1/2x20 1/8	1	11 1/8	A36	66
4			3/4 Dia A490N	0	2 3/4	1HD WASH	3
ONE	2138HB2		HORIZONTAL BRACE				547
1		2138HB2	WT6x60	5	6 1/4	A992	331
1		a358	L3 1/2x3x5/16	1	2 1/2	A36	8
1		p712	PL 1/2x26 1/8	2	5 9/16	A36	110
1		p324	PL 1/2x20 11/16	2	8 1/8	A36	94
6			3/4 Dia A325N	0	2 3/4	1HD WASH	4
			FIELD BOLTS				
4			3/4 Dia A325N	0	3 3/4	1HD WASH	
ONE	2138VB1		VERTICAL BRACE				108
1		2138VB1L	L4x4x1/2	4	0 11/16	A36	52
1		2138VB1R	L4x4x1/2	4	0 11/16	A36	52
2		p34	PL 3/4x2 1/2	0	2 1/2	A36	3
2			3/4 Dia A490N	0	3	1HD WASH	2
2	2138VB2		VERTICAL BRACE				250
2		2138VB2L	L4x4x1/2	4	8 3/4	A36	121
2		2138VB2R	L4x4x1/2	4	8 3/4	A36	121
4		p34	PL 3/4x2 1/2	0	2 1/2	A36	5
4			3/4 Dia A490N	0	2 1/4	1HD WASH	3
ONE	2138VB3		VERTICAL BRACE				110
1		2138VB3L	L4x4x1/2	4	1 11/16	A36	53
1		2138VB3R	L4x4x1/2	4	1 11/16	A36	53
2		p34	PL 3/4x2 1/2	0	2 1/2	A36	3
2			3/4 Dia A490N	0	3	1HD WASH	2

SHOP NOTES:
HOLES: 13/16" Dia U.N.O
SURFACE PREP: SSPC-SP 2
FINISH: 1 S/C EPOXY PRIMER (SW)
1 F/C HP EPOXY (SW)
ELECTRODES: E70XX - (LOW HYDROGEN)

JOB NAME: THE LUBRIZOL CORP
CUSTOMER: CHEMSTRESS CONSTRUCTION
JOB#: 11-509
DESCRIPTION: DRYER FRAMING DETAILS

SCALE	DRAWN BY	CHECK	O.K.
1 1/4=12"	MC	-	-

FormulaFabricating LLC
5200 W. 164th. Street • Brook Park, Ohio 44142
Phone 216-898-5788 • Fax 216-898-5898
formulafabricating.com

DATE: 7.20.11 SHEET: 2138

DRAWINGS PREPARED BY,
GLOBAL DETAILING, INC.
JOB # 11-372

NO	DATE	ISSUES OR REVISIONS	BY
1	Aug 18 2011	FAB	TDB
0	Aug 3 2011	FOR APPROVAL	TDB

Global Detailing, Inc

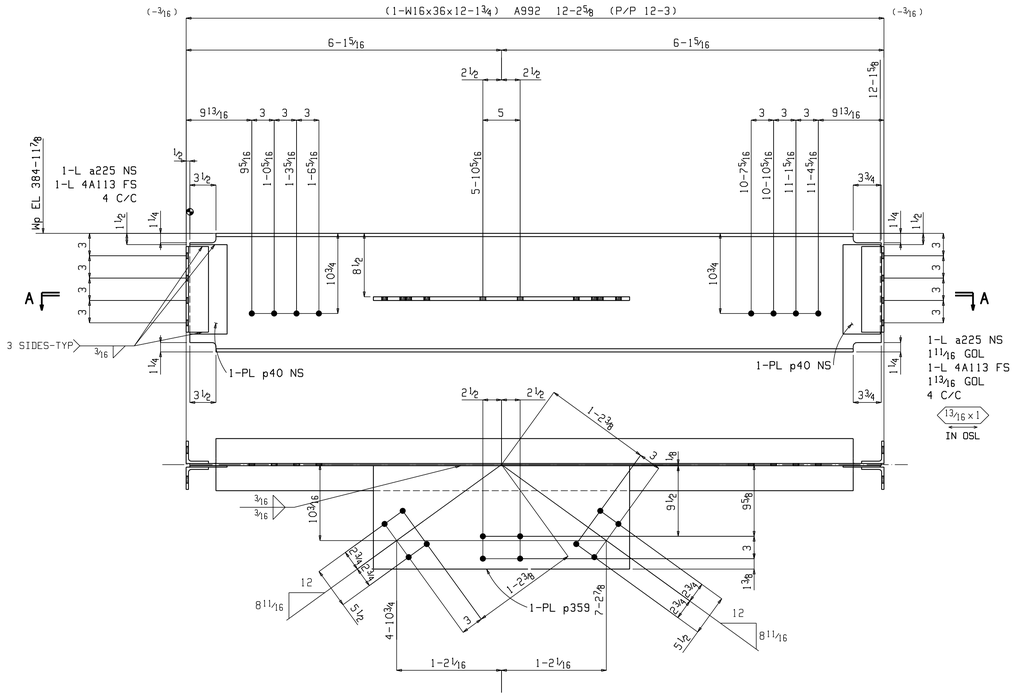

Section A-A
2139B1

ONE BEAM 2139B1

W 15⅞x5/16
F 7x7/16

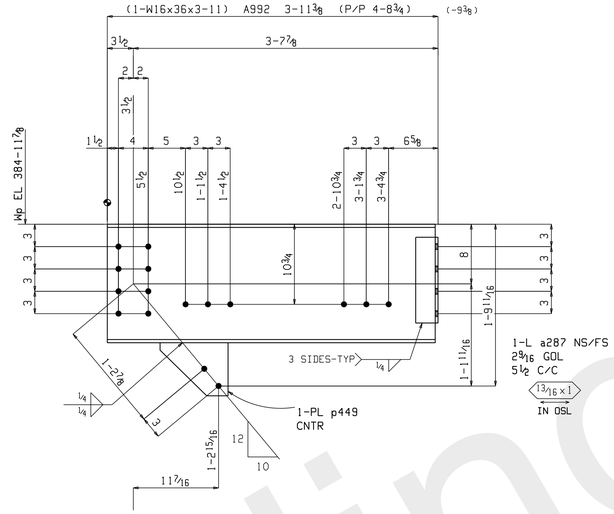

ONE BEAM 2139B2

W 15⅞x5/16
F 7x7/16

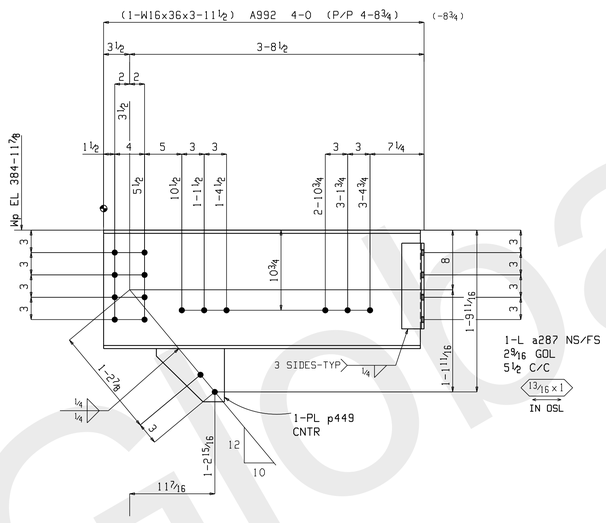

ONE BEAM 2139B3

W 15⅞x5/16
F 7x7/16

BILL OF MATERIAL

NO REQ	MARK NO	ASSY MARK	DESCRIPTION	LENGTH		REMARKS	WEIGHT TOTAL
ONE	2139B1		BEAM				535
1		2139B1	W16x36	12	1¾	A992	437
2		a225	L3x3x5/16	0	11½	A36	12
2		4A113	L3x3x5/16	0	11½	A36	12
1		p359	PL½x13⅞	2	10⅜	A36	68
2		p40	PL3/16x5	1	0	A36	6
			FIELD BOLTS				
4			¾ Dia A325N	0	2½	1HD WASH	
8			¾ Dia A325N	0	2¼	1HD WASH	
8			¾ Dia A490N	0	1¾	1HD WASH	
ONE	2139B2		BEAM				171
1		2139B2	W16x36	3	11	A992	141
2		a287	L4x3x⅜	0	11½	A36	16
1		p449	PL¾x7⅛	0	9⅛	A36	14
			FIELD BOLTS				
2			¾ Dia A490N	0	3	1HD WASH	
14			¾ Dia A490N	0	1¾	1HD WASH	
ONE	2139B3		BEAM				173
1		2139B3	W16x36	3	11½	A992	143
2		a287	L4x3x⅜	0	11½	A36	16
1		p449	PL¾x7⅛	0	9⅛	A36	14
			FIELD BOLTS				
2			¾ Dia A490N	0	3	1HD WASH	
14			¾ Dia A490N	0	1¾	1HD WASH	

SHOP NOTES:
HOLES: 13/16" Dia U.N.O
SURFACE PREP: SSPC-SP 2
FINISH: 1 S/C EPOXY PRIMER (SW)
1 F/C HP EPOXY (SW)
ELECTRODES: E70XX - (LOW HYDROGEN)

JOB NAME: THE LUBRIZOL CORP
CUSTOMER: CHEMSTRESS CONSTRUCTION
JOB#: 11-509
DESCRIPTION: DRYER FRAMING DETAILS

SCALE	DRAWN BY	CHECK	O.K.
1¼=12"	MC	-	-

FormulaFabricating LLC
5200 W. 164th. Street • Brook Park, Ohio 44142
Phone 216-898-5788 • Fax 216-898-5898
formulafabricating.com

DATE: 7.20.11 SHEET: 2139

DRAWINGS PREPARED BY,
GLOBAL DETAILING, INC.
JOB # 11-372

NO	DATE	ISSUES OR REVISIONS	BY
1	Aug 18 2011	FAB	TDB
0	Aug 3 2011	FOR APPROVAL	TDB

Global Detailing, Inc

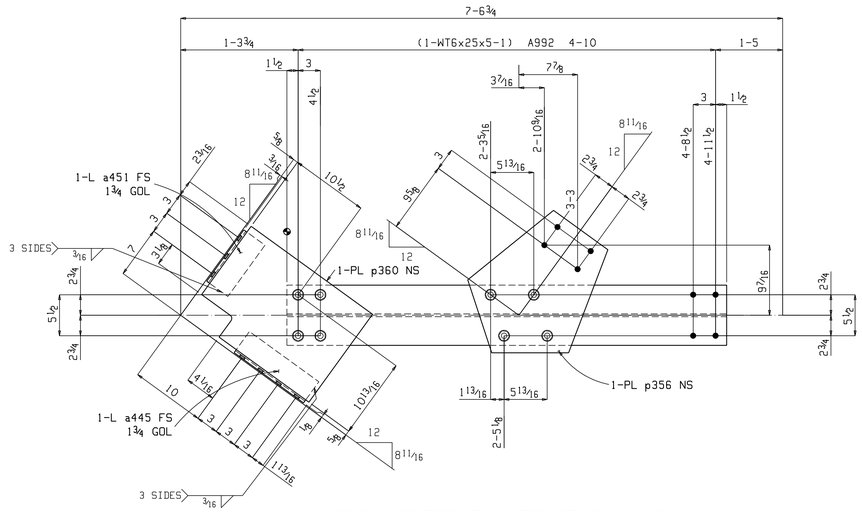

ONE HORIZONTAL BRACE 2140HB1

W 6⅛x⅜
F 8 1/16x⅝

SHOP NOTE:
TOE DIRECTION FAR SIDE

SHOP BOLTS:
8-¾x2¼ A490N

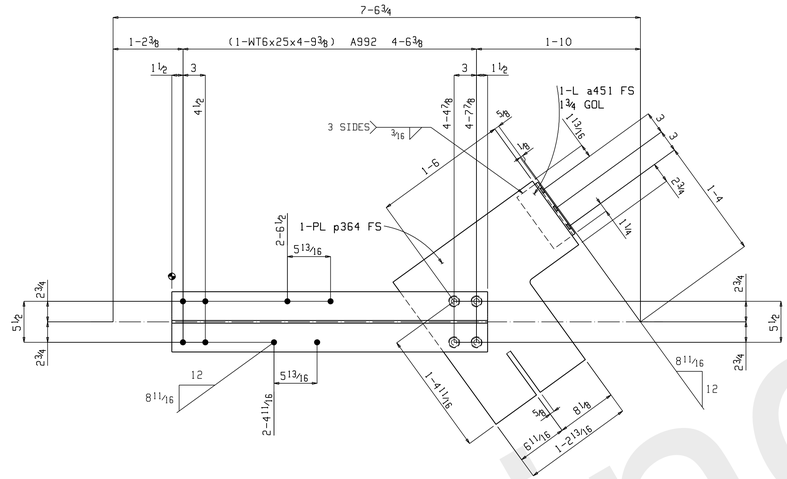

ONE HORIZONTAL BRACE 2140HB2

W 6⅛x⅜
F 8 1/16x⅝

SHOP NOTE:
TOE DIRECTION NEAR SIDE

SHOP BOLTS:
4-¾x2¼ A490N

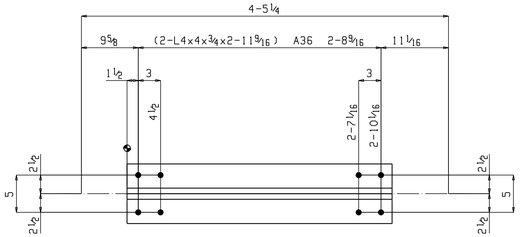

ONE HORIZONTAL BRACE 2140HB3

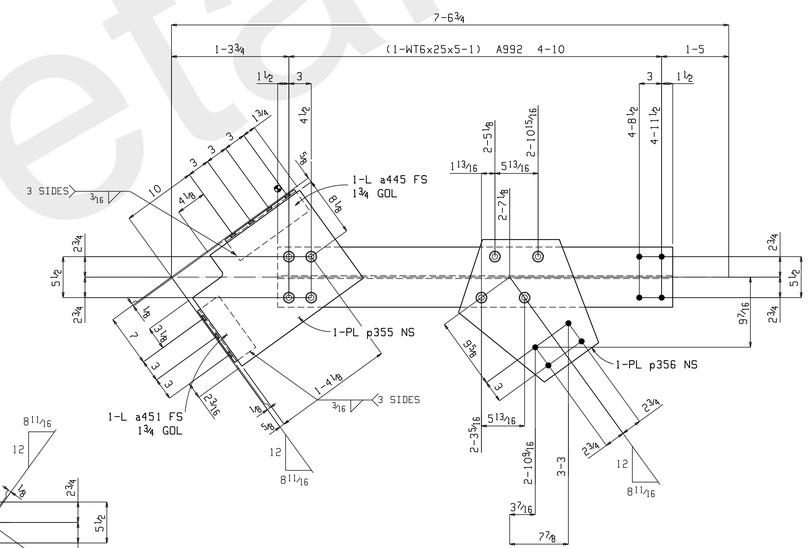

ONE HORIZONTAL BRACE 2140HB5

W 6⅛x⅜
F 8 1/16x⅝

SHOP NOTE:
TOE DIRECTION FAR SIDE

SHOP BOLTS:
8-¾x2¼ A490N

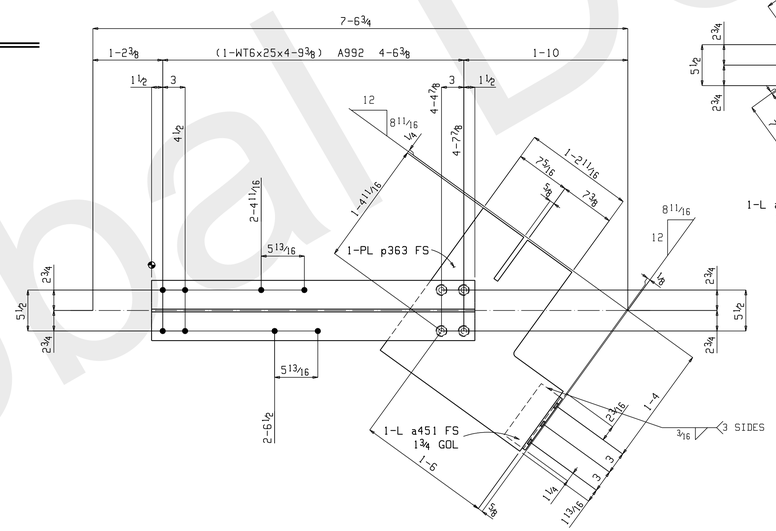

ONE HORIZONTAL BRACE 2140HB4

SHOP NOTE:
TOE DIRECTION NEAR SIDE

W 6⅛x⅜
F 8 1/16x⅝

SHOP BOLTS:
4-¾x2¼ A490N

BILL OF MATERIAL

NO REQ	MARK NO	ASSY MARK	DESCRIPTION	LENGTH		REMARKS	WEIGHT TOTAL
ONE	2140HB1		HORIZONTAL BRACE				233
1		2140HB1	WT6x25	5	1	A992	127
1		a445	L3½x3x5/16	0	11½	A36	6
1		a451	L3½x3x5/16	0	8½	A36	5
1		p356	PL½x16 11/16	1	8⅜	A36	48
1		p360	PL½x14 9/16	1	8⅛	A36	42
8			¾ Dia A490N	0	2¼	1HD WASH	5
			FIELD BOLTS				
4			¾ Dia A325N	0	2½	1HD WASH	
ONE	2140HB2		HORIZONTAL BRACE				204
1		2140HB2	WT6x25	4	9⅜	A992	120
1		a451	L3½x3x5/16	0	8½	A36	5
1		p364	PL½x23⅛	1	11 9/16	A36	77
4			¾ Dia A490N	0	2¼	1HD WASH	3
ONE	2140HB3		HORIZONTAL BRACE				110
1		2140HB3L	L4x4x¾	2	11 9/16	A36	55
1		2140HB3R	L4x4x¾	2	11 9/16	A36	55
ONE	2140HB4		HORIZONTAL BRACE				204
1		2140HB4	WT6x25	4	9⅜	A992	120
1		a451	L3½x3x5/16	0	8½	A36	5
1		p363	PL½x23⅛	1	11 9/16	A36	77
4			¾ Dia A490N	0	2¼	1HD WASH	3
ONE	2140HB5		HORIZONTAL BRACE				233
1		2140HB5	WT6x25	5	1	A992	127
1		a445	L3½x3x5/16	0	11½	A36	6
1		a451	L3½x3x5/16	0	8½	A36	5
1		p356	PL½x16 11/16	1	8⅜	A36	48
1		p355	PL½x14 9/16	1	8⅛	A36	42
8			¾ Dia A490N	0	2¼	1HD WASH	5
			FIELD BOLTS				
4			¾ Dia A490N	0	2½	1HD WASH	

SHOP NOTES:
HOLES: 13/16" Dia U.N.O
SURFACE PREP: SSPC-SP 2
FINISH: 1 S/C EPOXY PRIMER (SW)
1 F/C HP EPOXY (SW)
ELECTRODES: E70XX - (LOW HYDROGEN)

JOB NAME: THE LUBRIZOL CORP
CUSTOMER: CHEMSTRESS CONSTRUCTION
JOB#: 11-509
DESCRIPTION: DRYER FRAMING DETAILS

SCALE	DRAWN BY	CHECK	O.K.
1¼=12"	MC	-	-

FormulaFabricating LLC
5200 W. 164th. Street ◦ Brook Park, Ohio 44142
Phone 216-898-5788 ◦ Fax 216-898-5898
formulafabricating.com

DATE: 7.20.11 SHEET: 2140

DRAWINGS PREPARED BY, GLOBAL DETAILING, INC. JOB # 11-372

NO	DATE	ISSUES OR REVISIONS	BY
1	Aug 18 2011	FAB	TDB
0	Aug 3 2011	FOR APPROVAL	TDB

Global Detailing, Inc

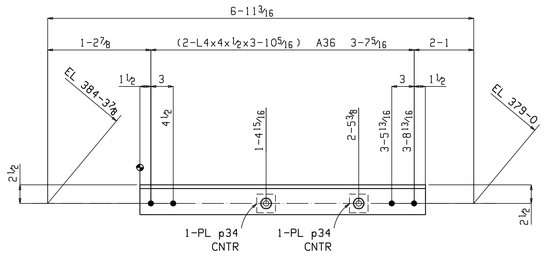

ONE VERTICAL BRACE 2141VB1

SHOP BOLTS:
2-3/4x3 A490N

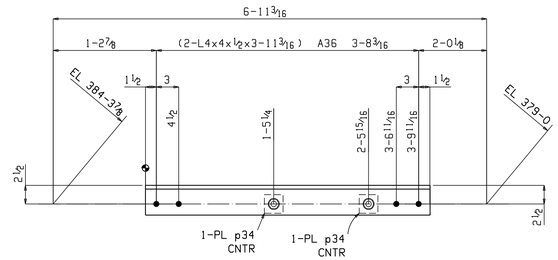

ONE VERTICAL BRACE 2141VB2

SHOP BOLTS:
2-3/4x3 A490N

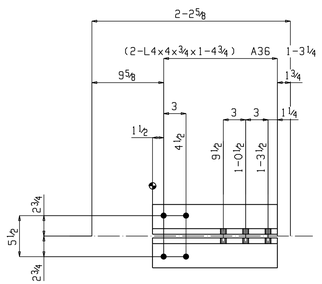

2 HORIZONTAL BRACES 2141HB1

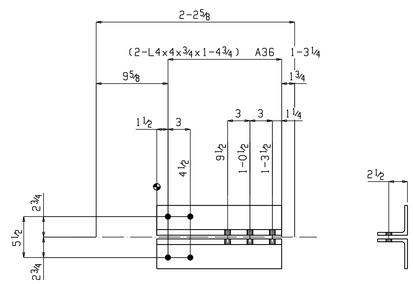

4 HORIZONTAL BRACES 2141HB2

BILL OF MATERIAL

NO REQ	MARK NO	ASSY MARK	DESCRIPTION	LENGTH		REMARKS	WEIGHT TOTAL
ONE	2141VB1		VERTICAL BRACE				103
1		2141VB1L	L4x4x1/2	3	10 5/16	A36	49
1		2141VB1R	L4x4x1/2	3	10 5/16	A36	49
2		p34	PL3/4x2 1/2	0	2 1/2	A36	3
2			3/4 Dia A490N	0	3	1HD WASH	2
ONE	2141VB2		VERTICAL BRACE				105
1		2141VB2L	L4x4x1/2	3	11 3/16	A36	50
1		2141VB2R	L4x4x1/2	3	11 3/16	A36	50
2		p34	PL3/4x2 1/2	0	2 1/2	A36	3
2			3/4 Dia A490N	0	3	1HD WASH	2
2	2141HB1		HORIZONTAL BRACE				103
2		2141HB1L	L4x4x3/4	1	4 3/4	A36	52
2		2141HB1R	L4x4x3/4	1	4 3/4	A36	52
4	2141HB2		HORIZONTAL BRACE				207
4		2141HB2L	L4x4x3/4	1	4 3/4	A36	103
4		2141HB2R	L4x4x3/4	1	4 3/4	A36	103

SHOP NOTES:
HOLES: 13/16" Dia U.N.O
SURFACE PREP: SSPC-SP 2
FINISH: 1 S/C EPOXY PRIMER (SW)
1 F/C HP EPOXY (SW)
ELECTRODES: E70XX - (LOW HYDROGEN)

JOB NAME: THE LUBRIZOL CORP
CUSTOMER: CHEMSTRESS CONSTRUCTION
JOB#: 11-509
DESCRIPTION: DRYER FRAMING DETAILS

SCALE	DRAWN BY	CHECK	O.K.
1 1/4=12"	MC	-	-

FormulaFabricating LLC
5200 W. 164th. Street • Brook Park, Ohio 44142
Phone 216-898-5788 • Fax 216-898-5898
formulafabricating.com

DATE: 7.20.11 SHEET: 2141

DRAWINGS PREPARED BY,
GLOBAL DETAILING, INC.
JOB # 11-372

NO	DATE	ISSUES OR REVISIONS	BY
1	Aug 18 2011	FAB	TDB
0	Aug 3 2011	FOR APPROVAL	TDB

Global Detailing, Inc

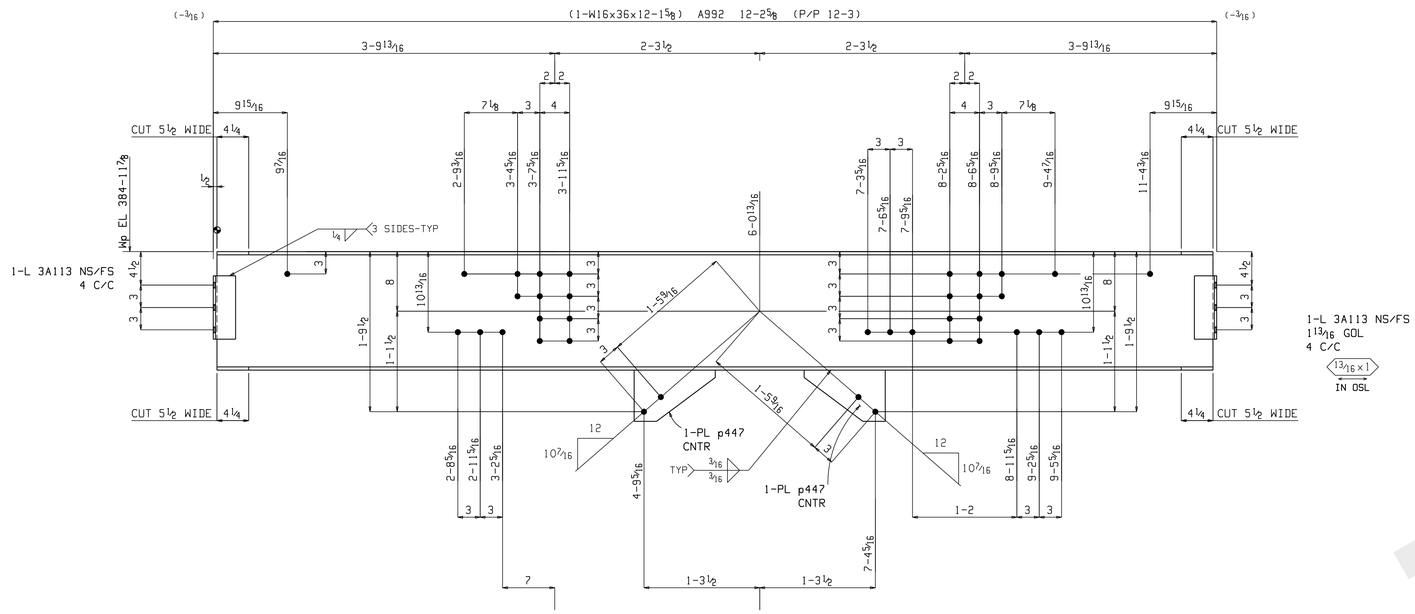

ONE BEAM 2142B1

W | 15 7/8 x 5/16
F | 7 x 7/16

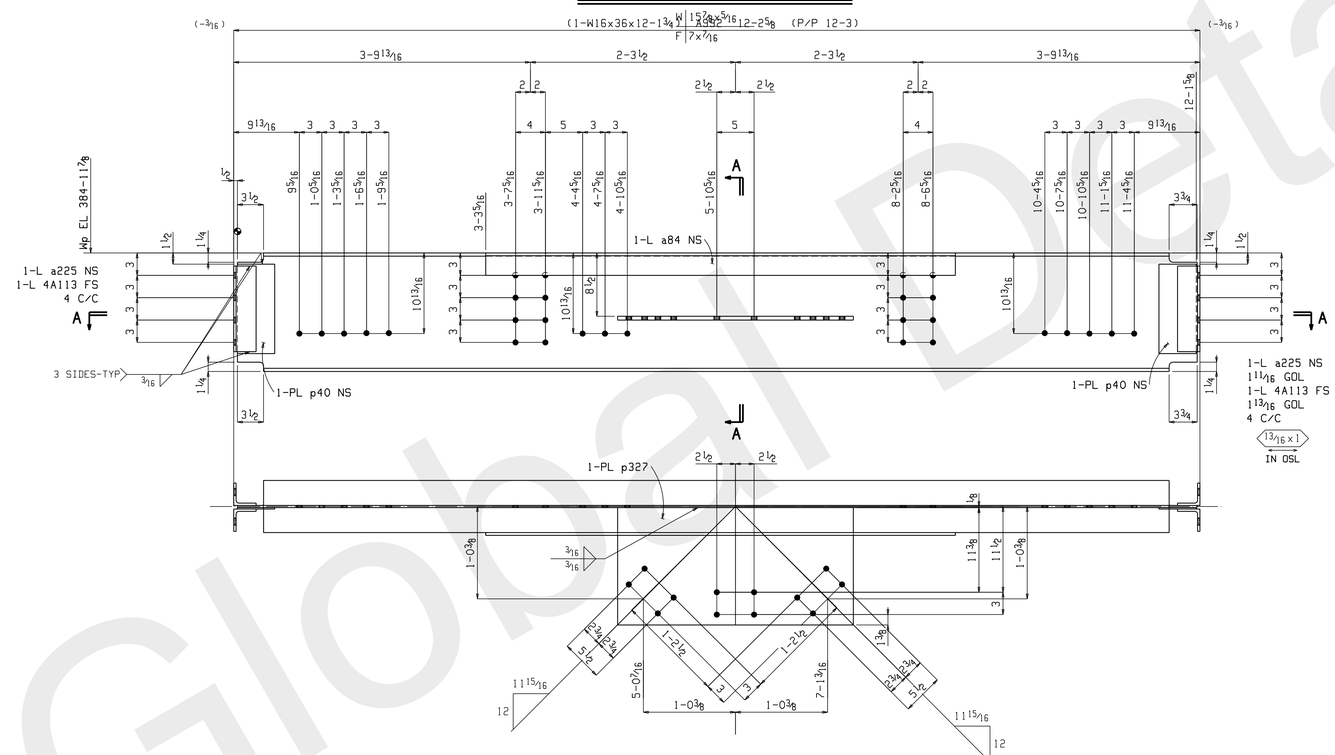

Section A-A
2142B2

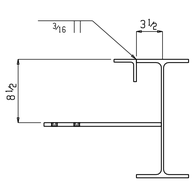

Section A-A
2142B2

ONE BEAM 2142B2

W | 15 7/8 x 5/16
F | 7 x 7/16

BILL OF MATERIAL

NO REQ	MARK NO	ASSY MARK	DESCRIPTION	LENGTH		REMARKS	WEIGHT TOTAL
ONE	2142B1		BEAM				486
1		2142B1	W16x36	12	1 5/8	A992	437
4		3A113	L3x3x5/16	0	8 1/2	A36	17
2		p447	PL3/4x6 7/8	0	10 7/8	A36	32
			FIELD BOLTS				
4			3/4 Dia A490N	0	3	1HD WASH	
4			3/4 Dia A325N	0	1 3/4	1HD WASH	
25			3/4 Dia A490N	0	1 3/4	1HD WASH	
ONE	2142B2		BEAM				578
1		2142B2	W16x36	12	1 3/4	A992	437
1		a84	L3x3x3/8	5	7	A36	40
2		a225	L3x3x5/16	0	11 1/2	A36	12
2		4A113	L3x3x5/16	0	11 1/2	A36	12
1		p327	PL1/2x15 3/4	2	7 5/8	A36	71
2		p40	PL3/16x5	1	0	A36	6
			FIELD BOLTS				
8			3/4 Dia A325N	0	2 3/4	1HD WASH	
4			3/4 Dia A325N	0	2 1/2	1HD WASH	
6			3/4 Dia A490N	0	2	1HD WASH	
23			3/4 Dia A490N	0	1 3/4	1HD WASH	

SHOP NOTES:
HOLES: 13/16" Dia U.N.O
SURFACE PREP: SSPC-SP 2
FINISH: 1 S/C EPOXY PRIMER (SW)
1 F/C HP EPOXY (SW)
ELECTRODES: E70XX - (LOW HYDROGEN)

JOB NAME: THE LUBRIZOL CORP
CUSTOMER: CHEMSTRESS CONSTRUCTION
JOB#: 11-509
DESCRIPTION: DRYER FRAMING DETAILS

SCALE	DRAWN BY	CHECK	O.K.
1 1/4=12"	MC	-	-

FormulaFabricating LLC
5200 W. 164th. Street ▫ Brook Park, Ohio 44142
Phone 216-898-5788 ▫ Fax 216-898-5898
formulafabricating.com

DATE: 7.20.11 SHEET: 2142

DRAWINGS PREPARED BY, GLOBAL DETAILING, INC. JOB # 11-372

NO	DATE	ISSUES OR REVISIONS	BY
0	Aug 3 2011	FOR APPROVAL	TDB

Global Detailing, Inc

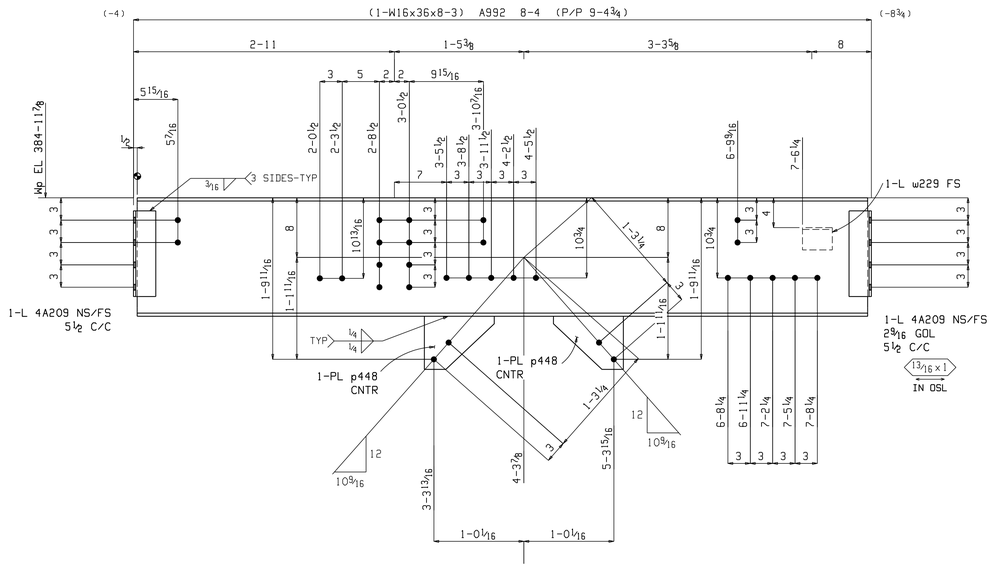

ONE BEAM 2143B1

W	15⅞x5/16
F	7x7/16

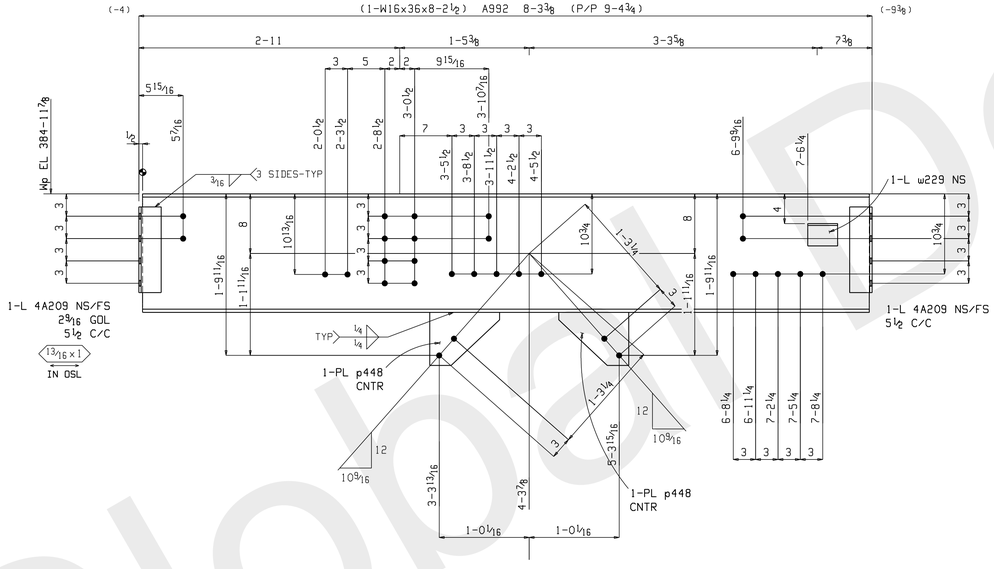

ONE BEAM 2143B2

W	15⅞x5/16
F	7x7/16

BILL OF MATERIAL

NO REQ	MARK NO	ASSY MARK	DESCRIPTION	LENGTH		REMARKS	WEIGHT TOTAL
ONE	2143B1		BEAM				355
1		2143B1	W16x36	8	3	A992	297
4		4A209	L4x3x5/16	0	11½	A36	28
1		w229	L4x3x¼	0	4	A36	2
2		p448	PL¾x7⅛	0	9⅜	A36	28
			FIELD BOLTS				
4			¾ Dia A490N	0	3	1HD WASH	
11			¾ Dia A325N	0	1¾	1HD WASH	
15			¾ Dia A490N	0	1¾	1HD WASH	
ONE	2143B2		BEAM				353
1		2143B2	W16x36	8	2½	A992	296
4		4A209	L4x3x5/16	0	11½	A36	28
1		w229	L4x3x¼	0	4	A36	2
2		p448	PL¾x7⅛	0	9⅜	A36	28
			FIELD BOLTS				
4			¾ Dia A490N	0	3	1HD WASH	
11			¾ Dia A325N	0	1¾	1HD WASH	
15			¾ Dia A490N	0	1¾	1HD WASH	

SHOP NOTES:
HOLES: 13/16" Dia U.N.O
SURFACE PREP: SSPC-SP 2
FINISH: 1 S/C EPOXY PRIMER (SW)
1 F/C HP EPOXY (SW)
ELECTRODES: E70XX - (LOW HYDROGEN)

JOB NAME: THE LUBRIZOL CORP
CUSTOMER: CHEMSTRESS CONSTRUCTION
JOB#: 11-509
DESCRIPTION: DRYER FRAMING DETAILS

SCALE	DRAWN BY	CHECK	O.K.
1¼=12"	MC	-	-

FormulaFabricating LLC
5200 W. 164th. Street o Brook Park, Ohio 44142
Phone 216-898-5788 o Fax 216-898-5898
formulafabricating.com

DATE: 7.20.11 SHEET: 2143

DRAWINGS PREPARED BY, GLOBAL DETAILING, INC.
JOB # 11-372

NO	DATE	ISSUES OR REVISIONS	BY
1	Aug 18 2011	FAB	TDB
0	Aug 3 2011	FOR APPROVAL	TDB

Global Detailing, Inc

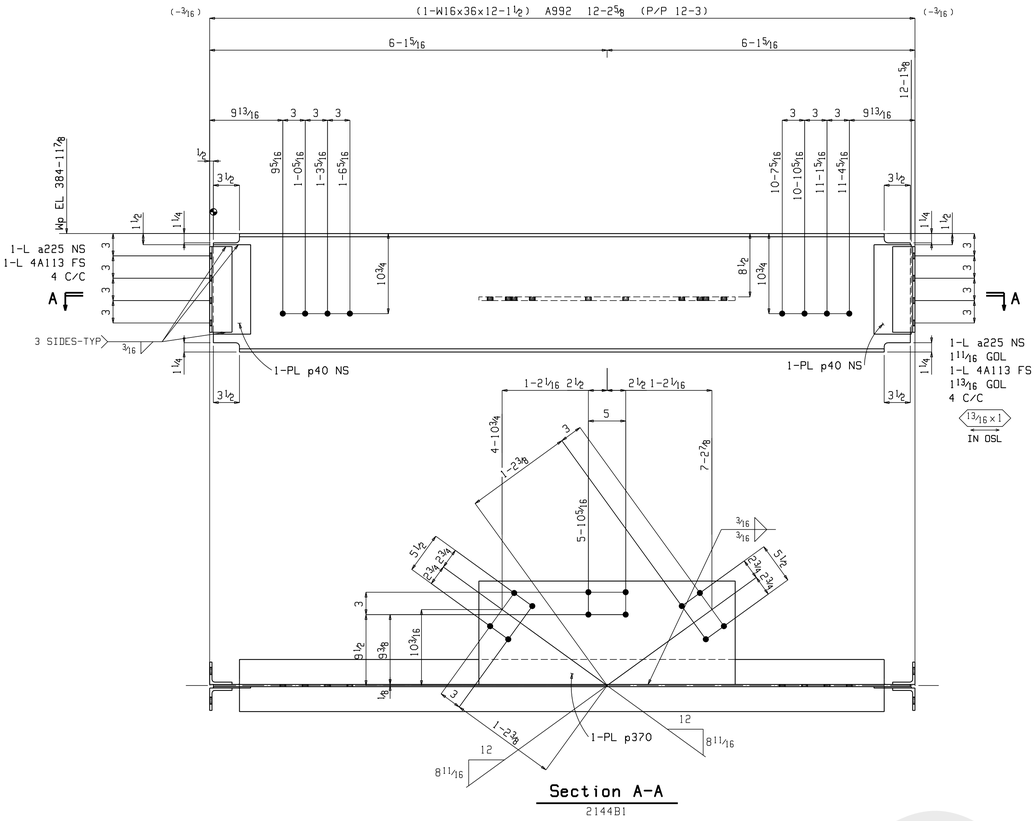

ONE BEAM 2144B1

W | 15⅞x5/16
F | 7x7/16

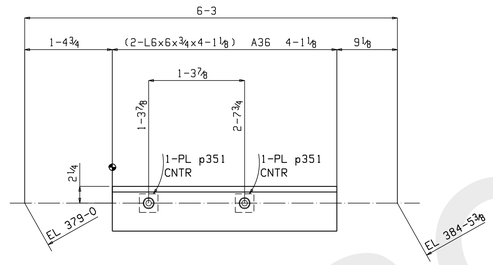

2 VERTICAL BRACES 2144VB1

SHOP BOLTS:
2-¾x3 A490N

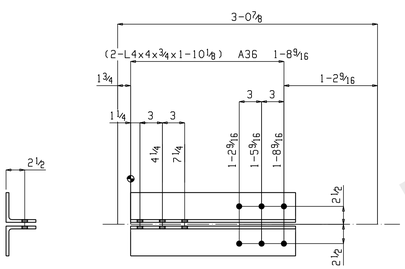

ONE HORIZONTAL BRACE 2144HB1

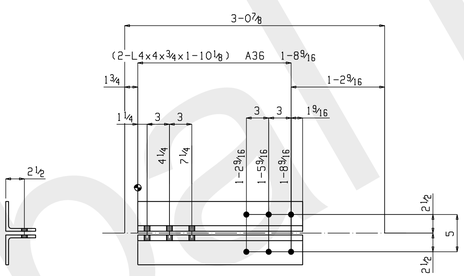

2 HORIZONTAL BRACES 2144HB2

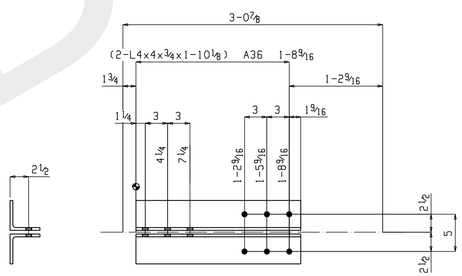

ONE HORIZONTAL BRACE 2144HB3

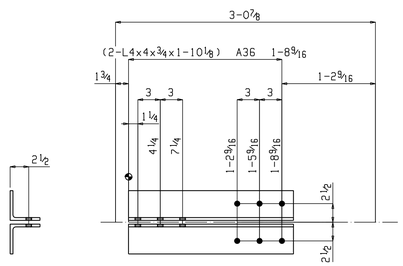

2 HORIZONTAL BRACES 2144HB4

BILL OF MATERIAL

NO REQ	MARK NO	ASSY MARK	DESCRIPTION	LENGTH		REMARKS	WEIGHT TOTAL
ONE	2144B1		BEAM				534
1		2144B1	W16x36	12	1½	A992	437
2		a225	L3x3x5/16	0	11½	A36	12
2		4A113	L3x3x5/16	0	11½	A36	12
1		p370	PL½x13⅞	2	10⅜	A36	68
2		p40	PL3/16x5	1	0	A36	6
			FIELD BOLTS				
4			¾ Dia A325N	0	2½	1HD WASH	
16			¾ Dia A325N	0	1¾	1HD WASH	
2	2144VB1		VERTICAL BRACE				476
2		2144VB1L	L6x6x¾	4	1⅛	A36	235
2		2144VB1R	L6x6x¾	4	1⅛	A36	235
4		p351	PL⅜x2½	0	2½	A36	3
4			¾ Dia A490N	0	3	1HD WASH	3
ONE	2144HB1		HORIZONTAL BRACE				68
1		2144HB1L	L4x4x¾	1	10⅛	A36	34
1		2144HB1R	L4x4x¾	1	10⅛	A36	34
			FIELD BOLTS				
6			¾ Dia A490N	0	2½	1HD WASH	
2	2144HB2		HORIZONTAL BRACE				136
2		2144HB2L	L4x4x¾	1	10⅛	A36	68
2		2144HB2R	L4x4x¾	1	10⅛	A36	68
ONE	2144HB3		HORIZONTAL BRACE				68
1		2144HB3L	L4x4x¾	1	10⅛	A36	34
1		2144HB3R	L4x4x¾	1	10⅛	A36	34
2	2144HB4		HORIZONTAL BRACE				136
2		2144HB4L	L4x4x¾	1	10⅛	A36	68
2		2144HB4R	L4x4x¾	1	10⅛	A36	68
			FIELD BOLTS				
6			¾ Dia A490N	0	2½	1HD WASH	

SHOP NOTES:
HOLES: 13/16" Dia U.N.O
SURFACE PREP: SSPC-SP 2
FINISH: 1 S/C EPOXY PRIMER (SW)
1 F/C HP EPOXY (SW)
ELECTRODES: E70XX - (LOW HYDROGEN)

JOB NAME: THE LUBRIZOL CORP
CUSTOMER: CHEMSTRESS CONSTRUCTION
JOB#: 11-509
DESCRIPTION: DRYER FRAMING DETAILS

SCALE	DRAWN BY	CHECK	O.K.
1¼=12"	MC	-	-

FormulaFabricating LLC
5200 W. 164th. Street ▫ Brook Park, Ohio 44142
Phone 216-898-5788 ▫ Fax 216-898-5898
formulafabricating.com

DATE: 7.20.11 SHEET: 2144

DRAWINGS PREPARED BY, GLOBAL DETAILING, INC. JOB # 11-372

NO	DATE	ISSUES OR REVISIONS	BY
1	Aug 18 2011	FAB	TDB
0	Aug 3 2011	FOR APPROVAL	TDB

Global Detailing, Inc

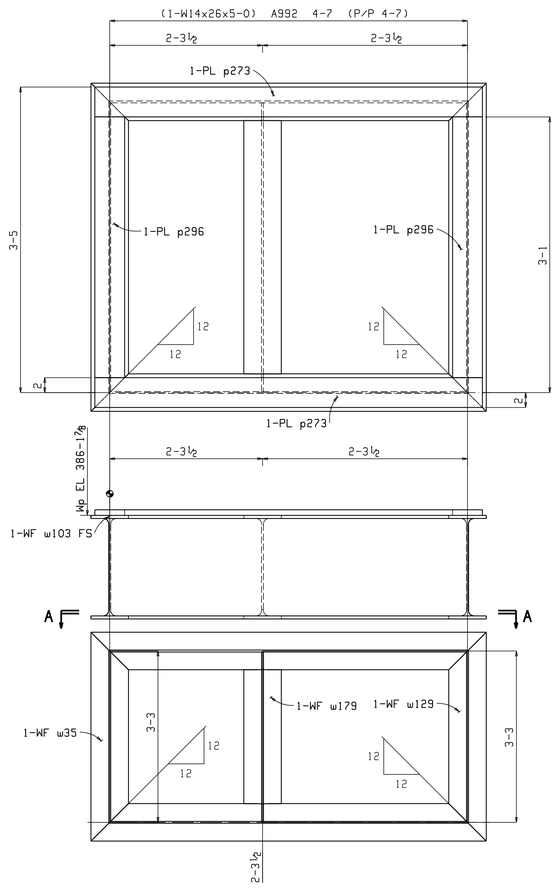

Section A-A

2145F1

3 FRAMES 2145F1

W 13⅞x¼
F 5x7/16

BILL OF MATERIAL

NO REQ	MARK NO	ASSY MARK	DESCRIPTION	LENGTH		REMARKS	WEIGHT TOTAL
3	2145F1		FRAME				2082
3		2145F1	W14x26	5	0	A992	390
3		w103	W14x26	5	0	A992	390
3		w35	W14x26	3	8	A992	285
3		w129	W14x26	3	8	A992	285
3		w179	W14x26	3	2¾	A992	252
6		p273	PL¾x4	4	11	A36	300
6		p296	PL¾x4	2	11	A36	180

SHOP NOTES:

HOLES: 13/16" Dia U.N.O
SURFACE PREP: SSPC-SP 2
FINISH: 1 S/C EPOXY PRIMER (SW)
1 F/C HP EPOXY (SW)
ELECTRODES: E70XX - (LOW HYDROGEN)

JOB NAME: THE LUBRIZOL CORP
CUSTOMER: CHEMSTRESS CONSTRUCTION
JOB#: 11-509
DESCRIPTION: DRYER FRAMING DETAILS

SCALE	DRAWN BY	CHECK	O.K.
1¼=12"	MC	-	-

FormulaFabricating LLC
5200 W. 164th. Street ▫ Brook Park, Ohio 44142
Phone 216-898-5788 ▫ Fax 216-898-5898
formulafabricating.com

DATE: 7.20.11 SHEET: 2145

DRAWINGS PREPARED BY, GLOBAL DETAILING, INC. JOB # 11-372

NO	DATE	ISSUES OR REVISIONS	BY
1	Aug 11 2011	FAB	TDB
0	Aug 3 2011	FOR APPROVAL	TDB

Global Detailing, Inc

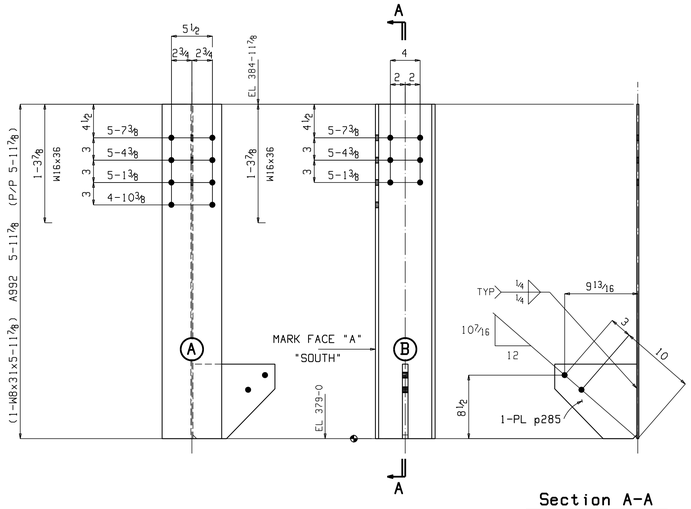

Section A-A
2146C1

ONE COLUMN 2146C1

W 8x5/16
F 8x7/16

AT GRID:
2

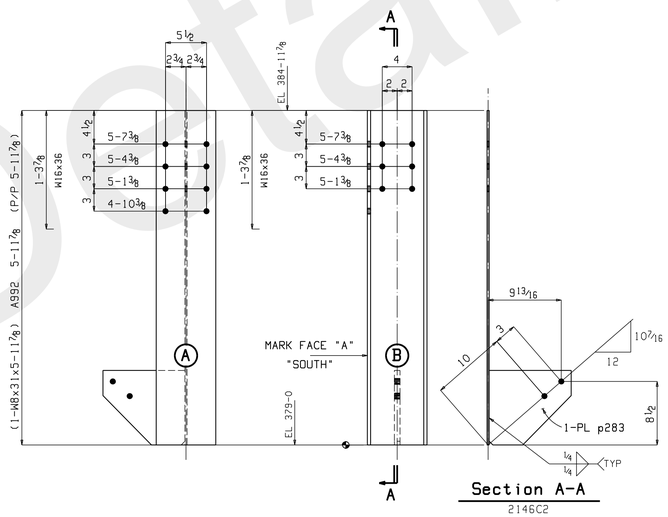

Section A-A
2146C2

ONE COLUMN 2146C2

W 8x5/16
F 8x7/16

AT GRID:
1.75

BILL OF MATERIAL

NO REQ	MARK NO	ASSY MARK	DESCRIPTION	LENGTH		REMARKS	WEIGHT TOTAL
ONE	2146C1		COLUMN				209
1		2146C1	W8x31	5	11 7/8	A992	186
1		p285	PL 3/4x10	0	11	A36	23
			FIELD BOLTS				
2			3/4 Dia A490N	0	3	1HD WASH	
8			3/4 Dia A490N	0	2	1HD WASH	
6			3/4 Dia A325N	0	1 3/4	1HD WASH	
ONE	2146C2		COLUMN				209
1		2146C2	W8x31	5	11 7/8	A992	186
1		p283	PL 3/4x10	0	11	A36	23
			FIELD BOLTS				
2			3/4 Dia A490N	0	3	1HD WASH	
8			3/4 Dia A490N	0	2	1HD WASH	
6			3/4 Dia A325N	0	1 3/4	1HD WASH	

SHOP NOTES:
HOLES: 13/16" Dia U.N.O
SURFACE PREP: SSPC-SP 2
FINISH: 1 S/C EPOXY PRIMER (SW)
1 F/C HP EPOXY (SW)
ELECTRODES: E70XX - (LOW HYDROGEN)

JOB NAME: THE LUBRIZOL CORP
CUSTOMER: CHEMSTRESS CONSTRUCTION
JOB#: 11-509
DESCRIPTION: DRYER FRAMING DETAILS

SCALE	DRAWN BY	CHECK	O.K.
1 1/4=12"	MC	-	-

FormulaFabricating LLC
5200 W. 164th. Street ◦ Brook Park, Ohio 44142
Phone 216-898-5788 ◦ Fax 216-898-5838
formulafabricating.com

DATE: 7.20.11 SHEET: 2146

DRAWINGS PREPARED BY,
GLOBAL DETAILING, INC.
JOB # 11-372

NO	DATE	ISSUES OR REVISIONS	BY
1	Aug 18 2011	FAB	TDB
0	Aug 8 2011	FOR APPROVAL	TDB

Global Detailing, Inc

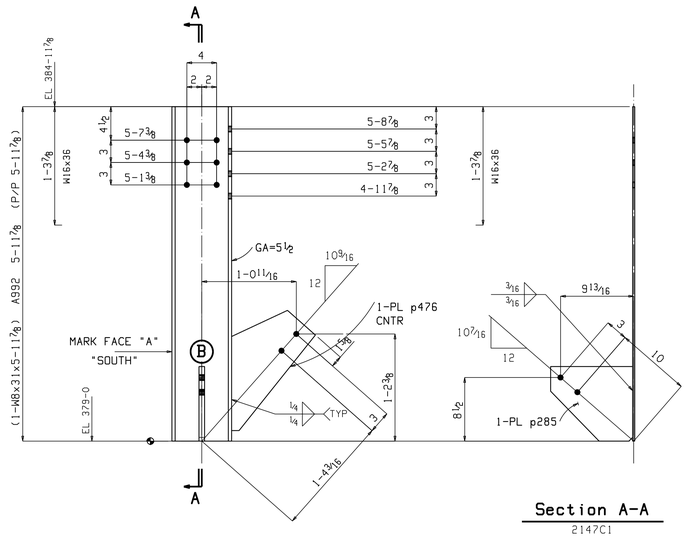

Section A-A
2147C1

2 COLUMNS 2147C1

W	8x5/16
F	8x7/16

AT GRID:
1.5
2

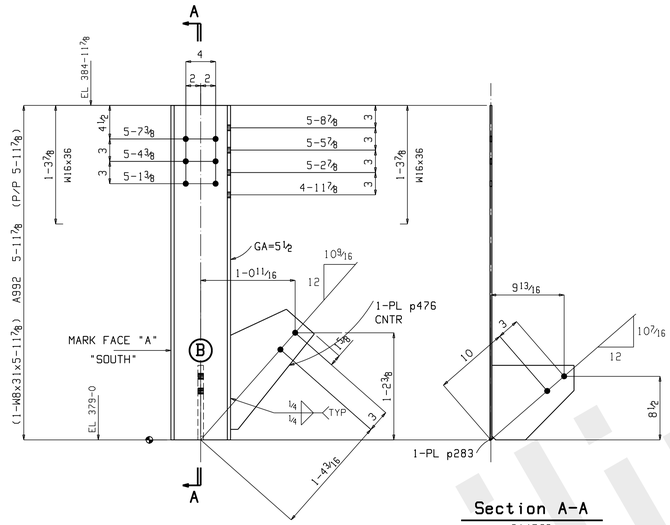

Section A-A
2147C2

2 COLUMNS 2147C2

W	8x5/16
F	8x7/16

AT GRID:
1.25
1.75

BILL OF MATERIAL

NO REQ	MARK NO	ASSY MARK	DESCRIPTION	LENGTH		REMARKS	WEIGHT TOTAL
2	2147C1		COLUMN				495
2		2147C1	W8x31	5	11 7/8	A992	371
2		p476	PL3/4x11 1/4	1	4 1/8	A36	77
2		p285	PL3/4x10	0	11	A36	47
			FIELD BOLTS				
8			3/4 Dia A490N	0	3	1HD WASH	
16			3/4 Dia A490N	0	2	1HD WASH	
12			3/4 Dia A490N	0	1 3/4	1HD WASH	
2	2147C2		COLUMN				495
2		2147C2	W8x31	5	11 7/8	A992	371
2		p476	PL3/4x11 1/4	1	4 1/8	A36	77
2		p283	PL3/4x10	0	11	A36	47
			FIELD BOLTS				
8			3/4 Dia A490N	0	3	1HD WASH	
16			3/4 Dia A490N	0	2	1HD WASH	
12			3/4 Dia A490N	0	1 3/4	1HD WASH	

SHOP NOTES:
HOLES: 13/16" Dia U.N.O
SURFACE PREP: SSPC-SP 2
FINISH: 1 S/C EPOXY PRIMER (SW)
1 F/C HP EPOXY (SW)
ELECTRODES: E70XX - (LOW HYDROGEN)

JOB NAME: THE LUBRIZOL CORP
CUSTOMER: CHEMSTRESS CONSTRUCTION
JOB#: 11-509
DESCRIPTION: DRYER FRAMING DETAILS

SCALE	DRAWN BY	CHECK	O.K.
1 1/4=12"	MC	-	-

FormulaFabricating LLC
5200 W. 164th. Street • Brook Park, Ohio 44142
Phone 216-898-5788 • Fax 216-898-5898
formulafabricating.com

DATE: 7.20.11 SHEET: 2147

DRAWINGS PREPARED BY,
GLOBAL DETAILING, INC.
JOB # 11-372

NO	DATE	ISSUES OR REVISIONS	BY
1	Aug 18 2011	FAB	TDB
0	Aug 8 2011	FOR APPROVAL	TDB

Global Detailing, Inc