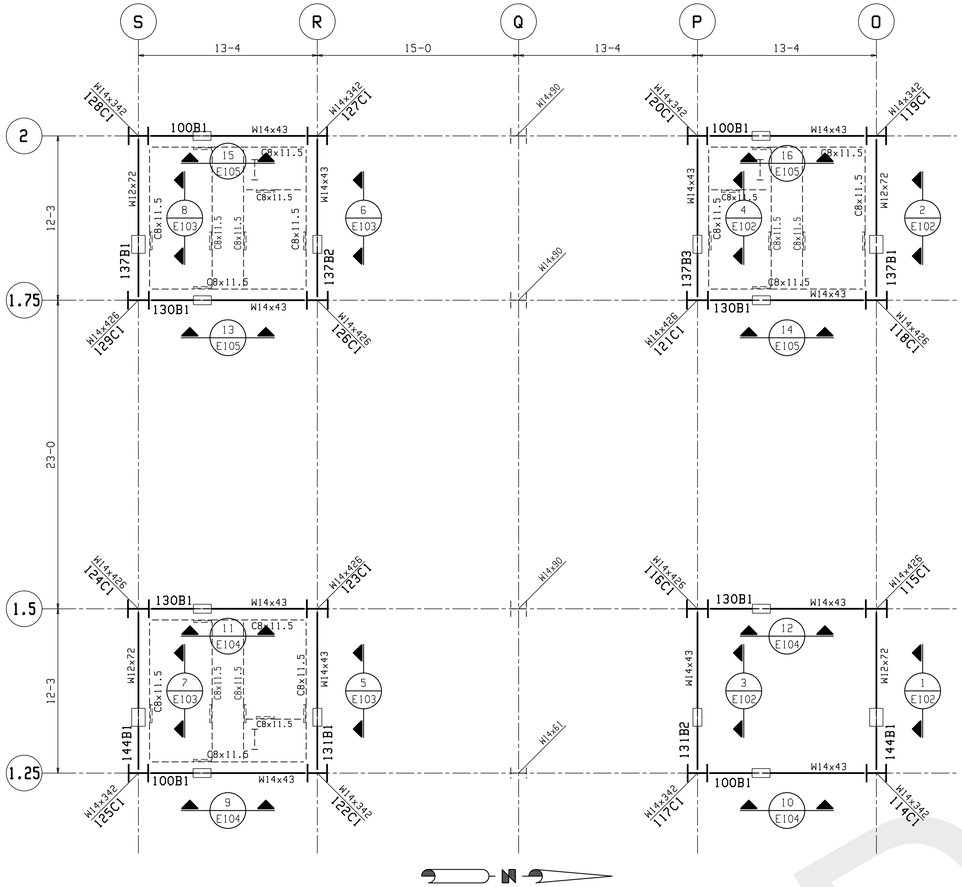

PARTIAL 1ST FLOOR PLAN

1) TOP OF STEEL AT ELEVATION 360-5¾ (U.N.O.)
2) C8's SHOWN THIS PLAN, REFER TO E501 FOR MARKS

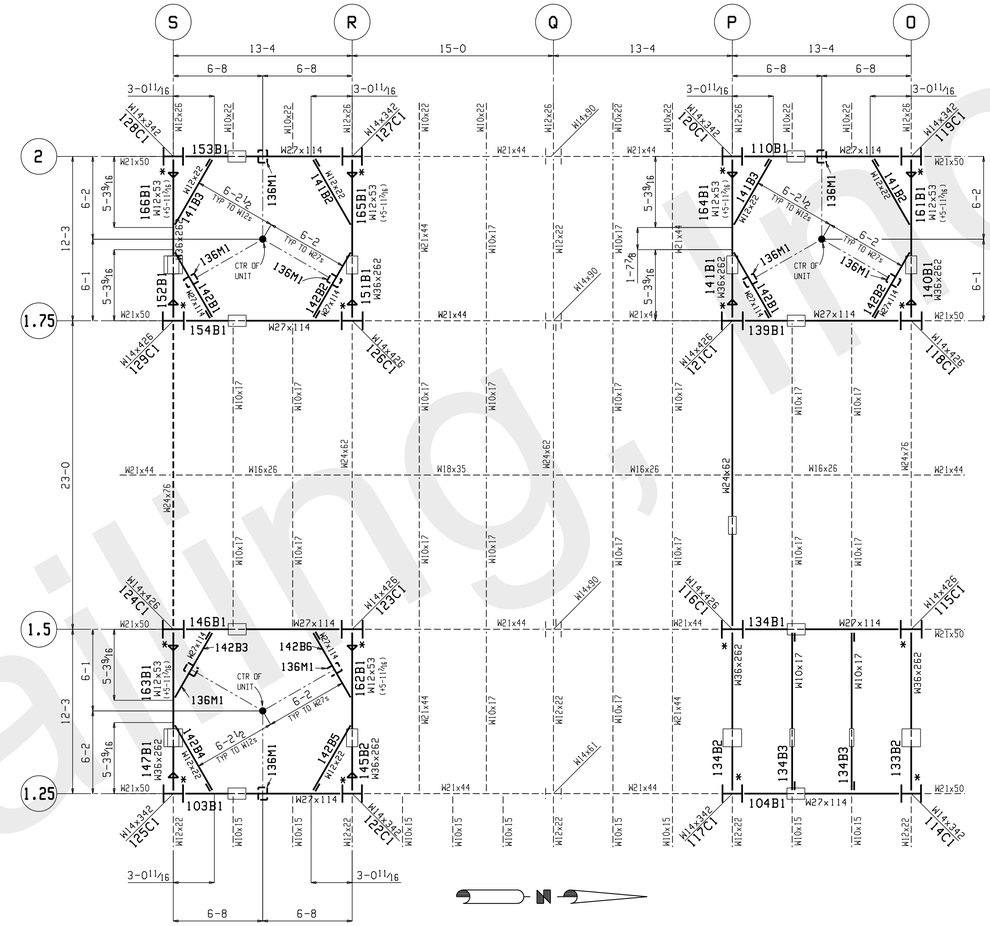

PARTIAL 3RD FLOOR PLAN

1) TOP OF STEEL AT ELEVATION 379-0 (U.N.O.)
2) (*) REPRESENTS A490X BOLTS TO BE USED

Global Detailing, Inc

DRAWINGS PREPARED BY,
GLOBAL DETAILING, INC.
JOB # 11-372

NO	DATE	ISSUES OR REVISIONS	BY
2	Jul 20 2011	FIELD USE	TC
1	Jun 14 2011	APP #2	TDB
0	May 6 2011	APPROVAL	TC

JOB NAME: THE LUBRIZOL CORP
CUSTOMER: CHEMSTRESS CONSTRUCTION
JOB#: 11-509
DESCRIPTION: 1ST & 3RD FLOOR PLANS

SCALE	DRAWN BY	CHECK	O.K.
–	MC	AQ	–

FormulaFabricating LLC
5200 W. 164th. Street ▫ Brook Park, Ohio 44142
Phone 216-898-5788 ▫ Fax 216-898-5898
formulafabricating.com

DATE: 5.6.11 SHEET: E100

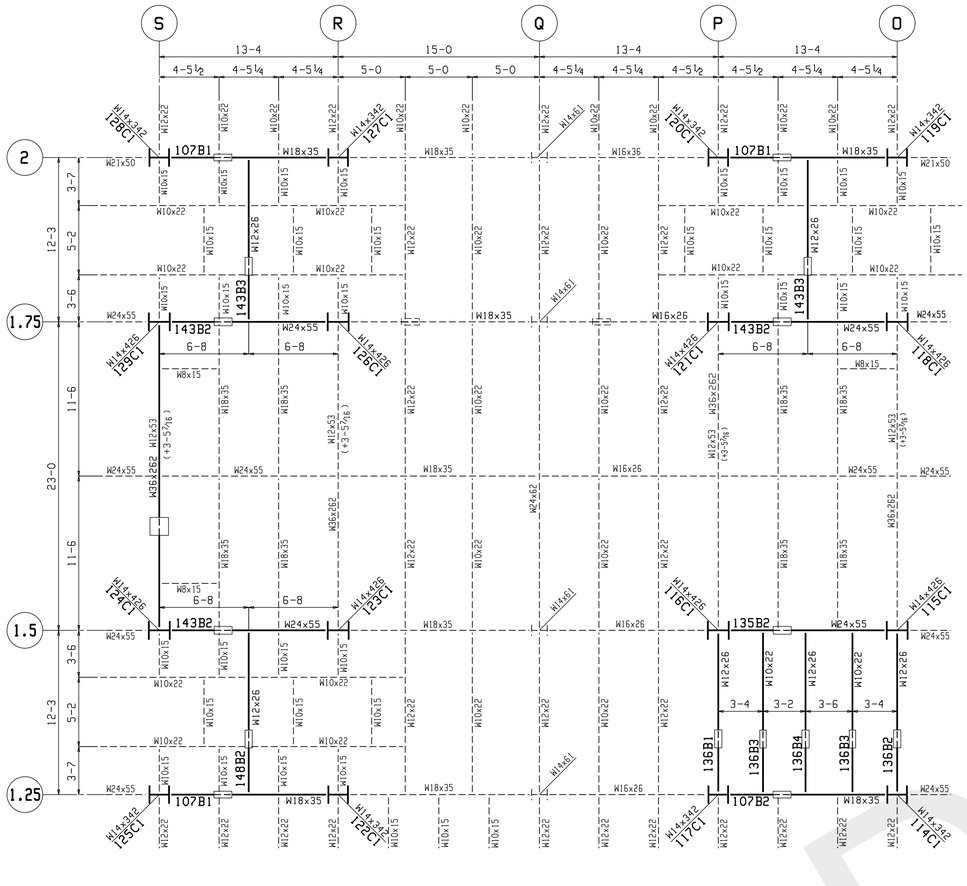

PARTIAL 4TH FLOOR PLAN

1) TOP OF STEEL AT ELEVATION 401-6 (U.N.O.)

Global Detailing, Inc

2	Jul 20 2011	FIELD USE	TC
1	Jun 14 2011	APP #2	TDB
0	May 6 2011	APPROVAL	TC
NO	DATE	ISSUES OR REVISIONS	BY

DRAWINGS PREPARED BY,
GLOBAL DETAILING, INC.
JOB # 11-372

JOB NAME: THE LUBRIZOL CORP
CUSTOMER: CHEMSTRESS CONSTRUCTION
JOB#: 11-509
DESCRIPTION: 4TH FLOOR PLAN

SCALE	DRAWN BY	CHECK	O.K.
–	MC	AQ	–

FormulaFabricating LLC
5200 W. 164th. Street ▫ Brook Park, Ohio 44142
Phone 216-898-5788 ▫ Fax 216-898-5898
formulafabricating.com

DATE: 5.6.11 SHEET: E101

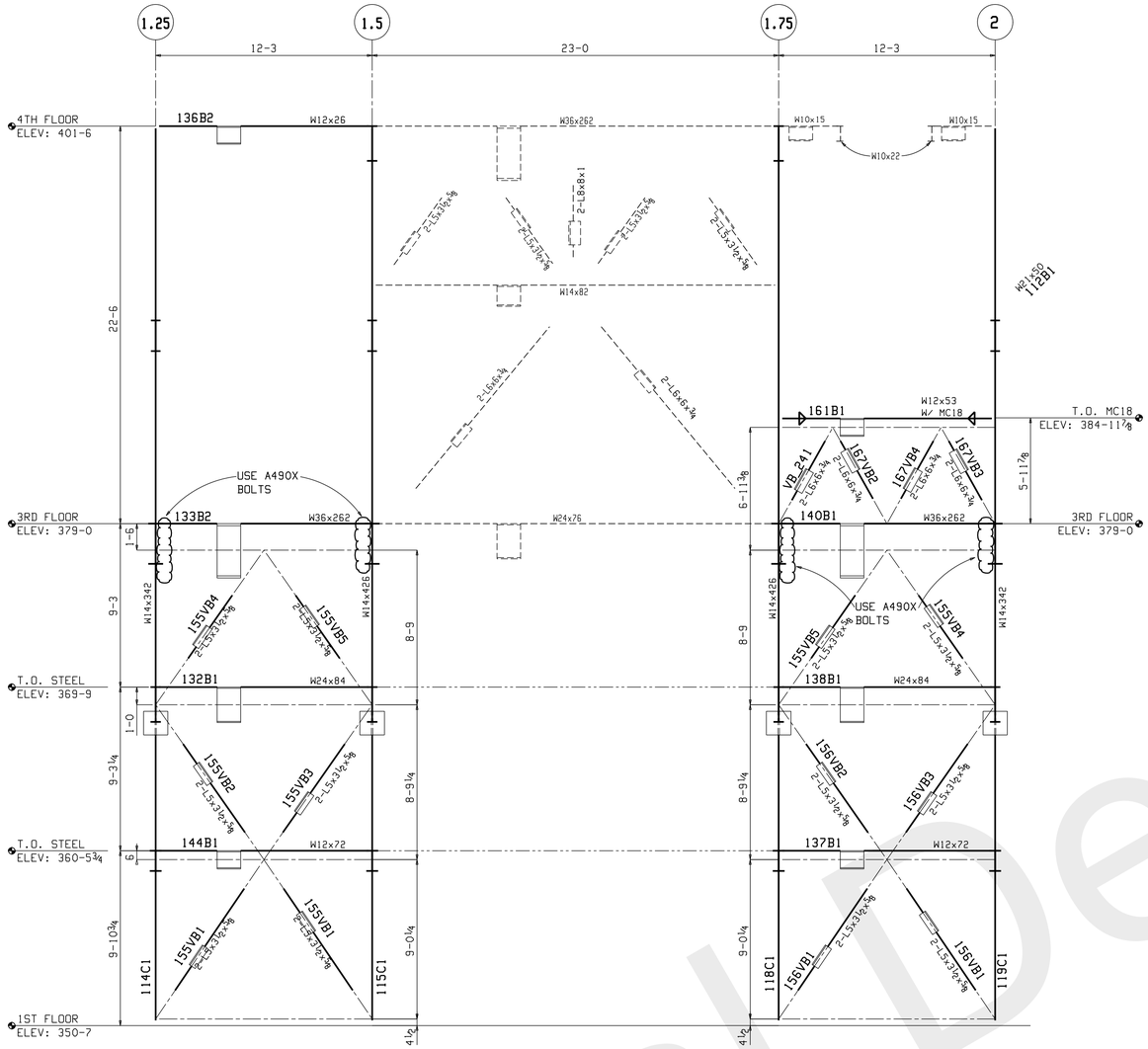

1 E102 SECTION

2 E102 SECTION

BRACING ELEVATION ALONG ROW "O"

(LOOKING SOUTH)

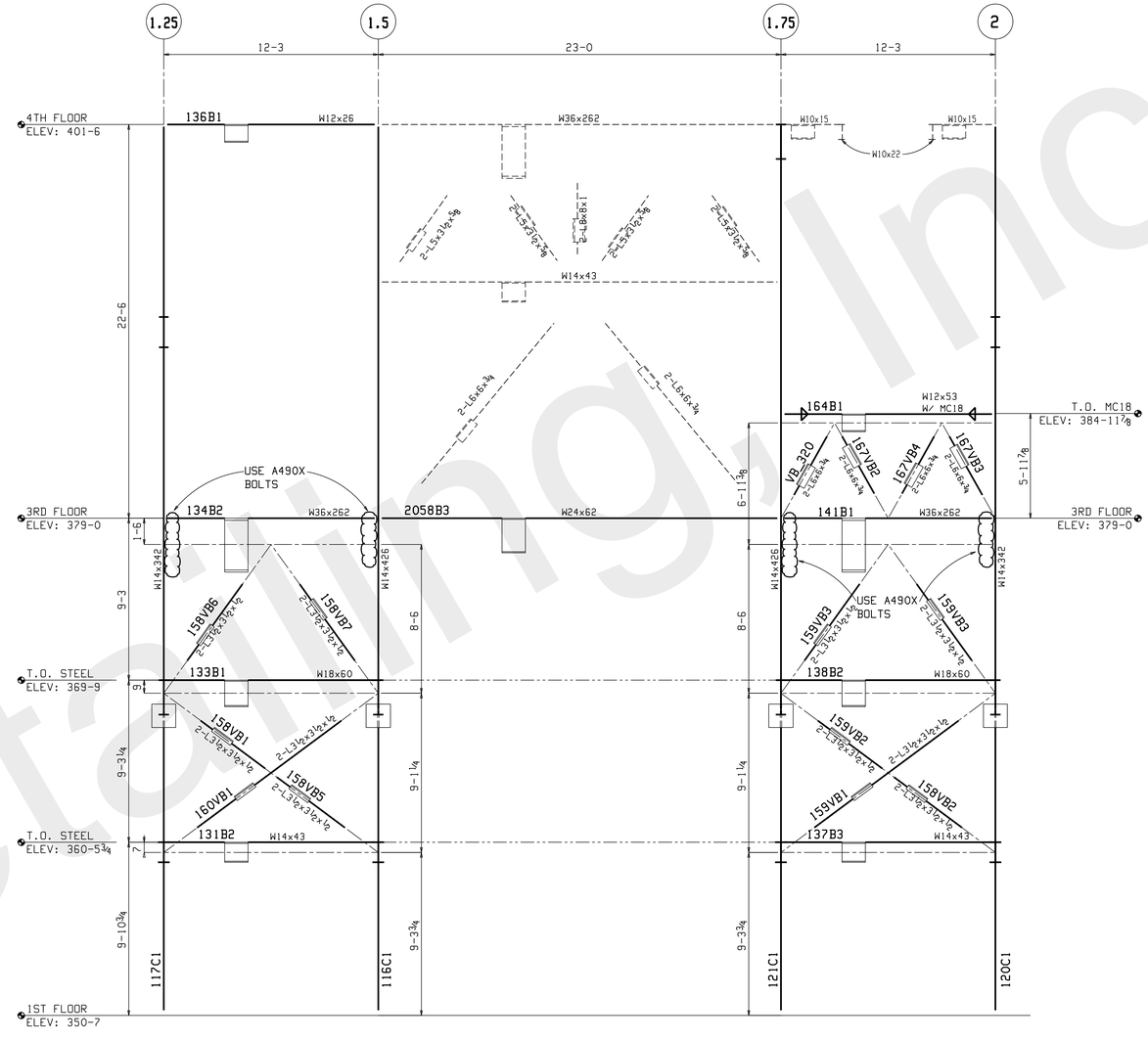

3 E102 SECTION

4 E102 SECTION

BRACING ELEVATION ALONG ROW "P"

(LOOKING SOUTH)

NOTE:
SEE SHEET #E106 FOR
TYPICAL BRACING SECTIONS

DRAWINGS PREPARED BY,
GLOBAL DETAILING, INC.
JOB # 11-372

NO	DATE	ISSUES OR REVISIONS	BY
2	Jul 20 2011	FIELD USE	TC
1	Jun 14 2011	APP #2	TDB

JOB NAME: THE LUBRIZOL CORP
CUSTOMER: CHEMSTRESS CONSTRUCTION
JOB#: 11-509
DESCRIPTION: BRACING ELEVATIONS

SCALE	DRAWN BY	CHECK	O.K.
-	MC	AQ	-

FormulaFabricating LLC
5200 W. 164th. Street ◦ Brook Park, Ohio 44142
Phone 216-898-5788 ◦ Fax 216-898-5898
formulafabricating.com

DATE: 5.6.11 SHEET: E102

Global Detailing, Inc

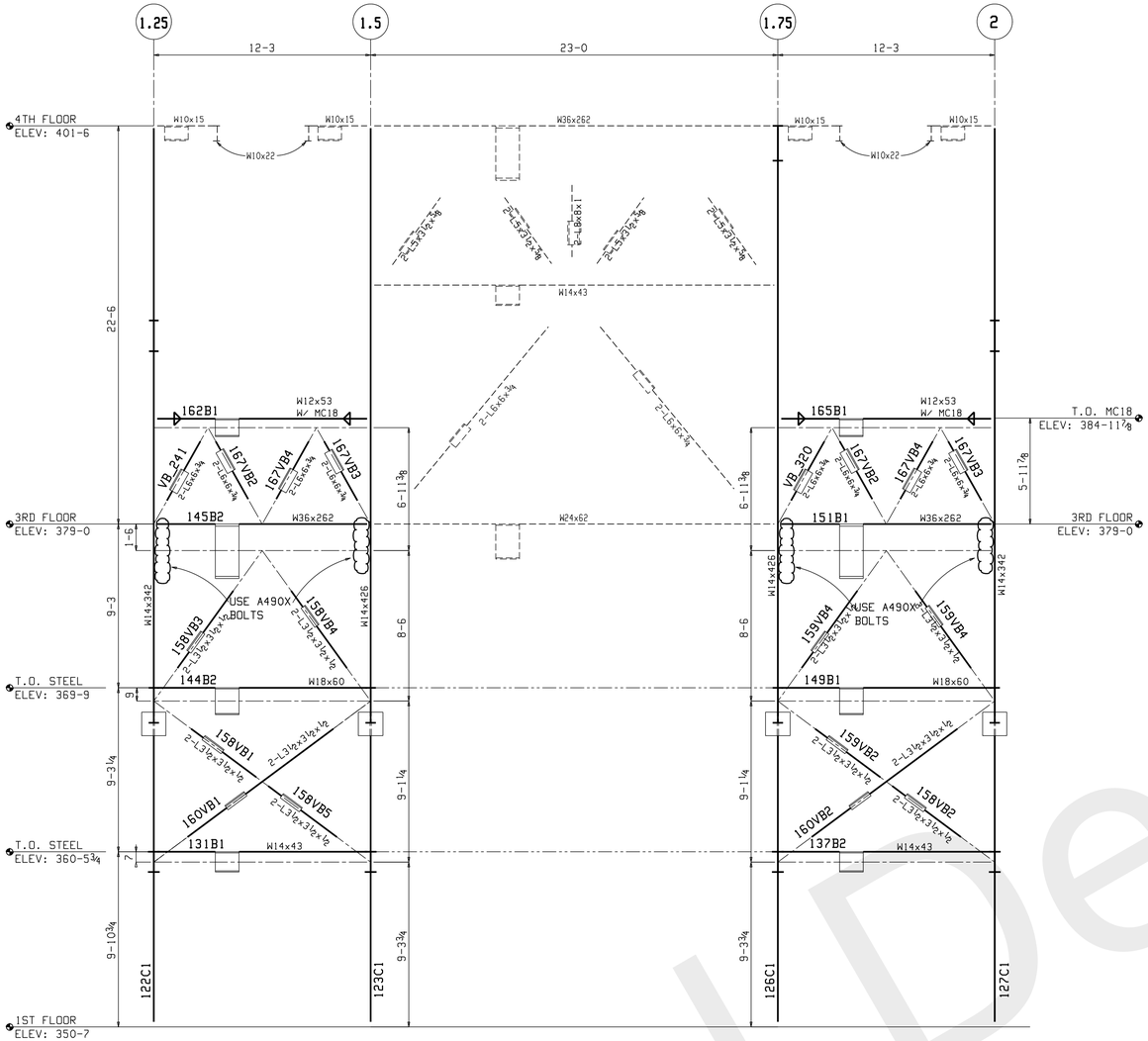

BRACING ELEVATION ALONG ROW "R"
(LOOKING SOUTH)

BRACING ELEVATION ALONG ROW "S"
(LOOKING SOUTH)

NOTE:
SEE SHEET #E106 FOR
TYPICAL BRACING SECTIONS

DRAWINGS PREPARED BY,
GLOBAL DETAILING, INC.
JOB # 11-372

NO	DATE	ISSUES OR REVISIONS	BY
2	Jul 20 2011	FIELD USE	TC
1	Jun 14 2011	APP #2	TDB

JOB NAME: THE LUBRIZOL CORP
CUSTOMER: CHEMSTRESS CONSTRUCTION
JOB#: 11-509
DESCRIPTION: BRACING ELEVATIONS

SCALE	DRAWN BY	CHECK	D.K.
–	MC	AQ	–

FormulaFabricating LLC
5200 W. 164th. Street • Brook Park, Ohio 44142
Phone 216-898-5788 • Fax 216-898-5898
formulafabricating.com

DATE: 5.6.11
SHEET: E103

Global Detailing, Inc

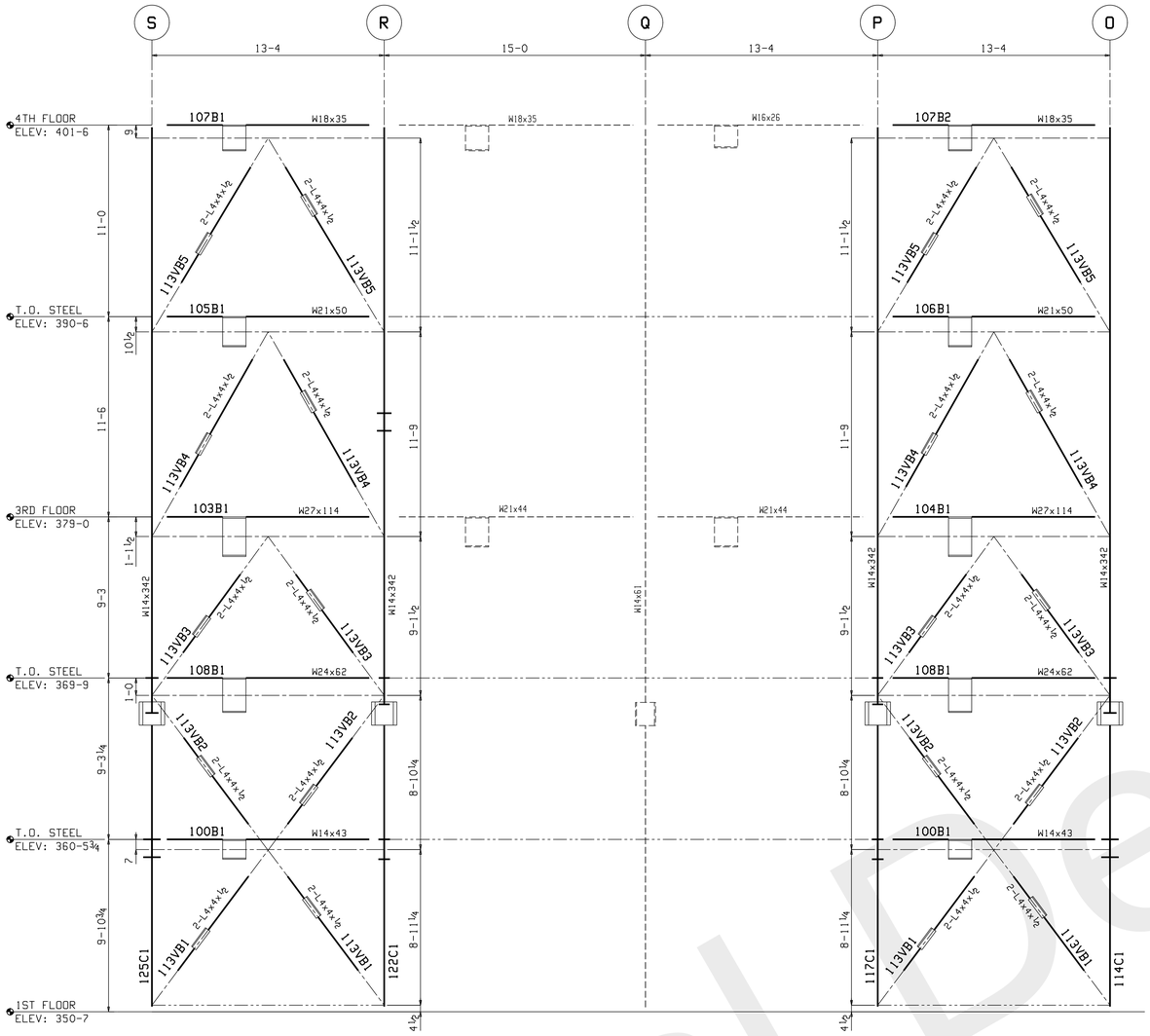

9 E104 SECTION

10 E104 SECTION

BRACING ELEVATION ALONG ROW "1.25"

(LOOKING WEST)

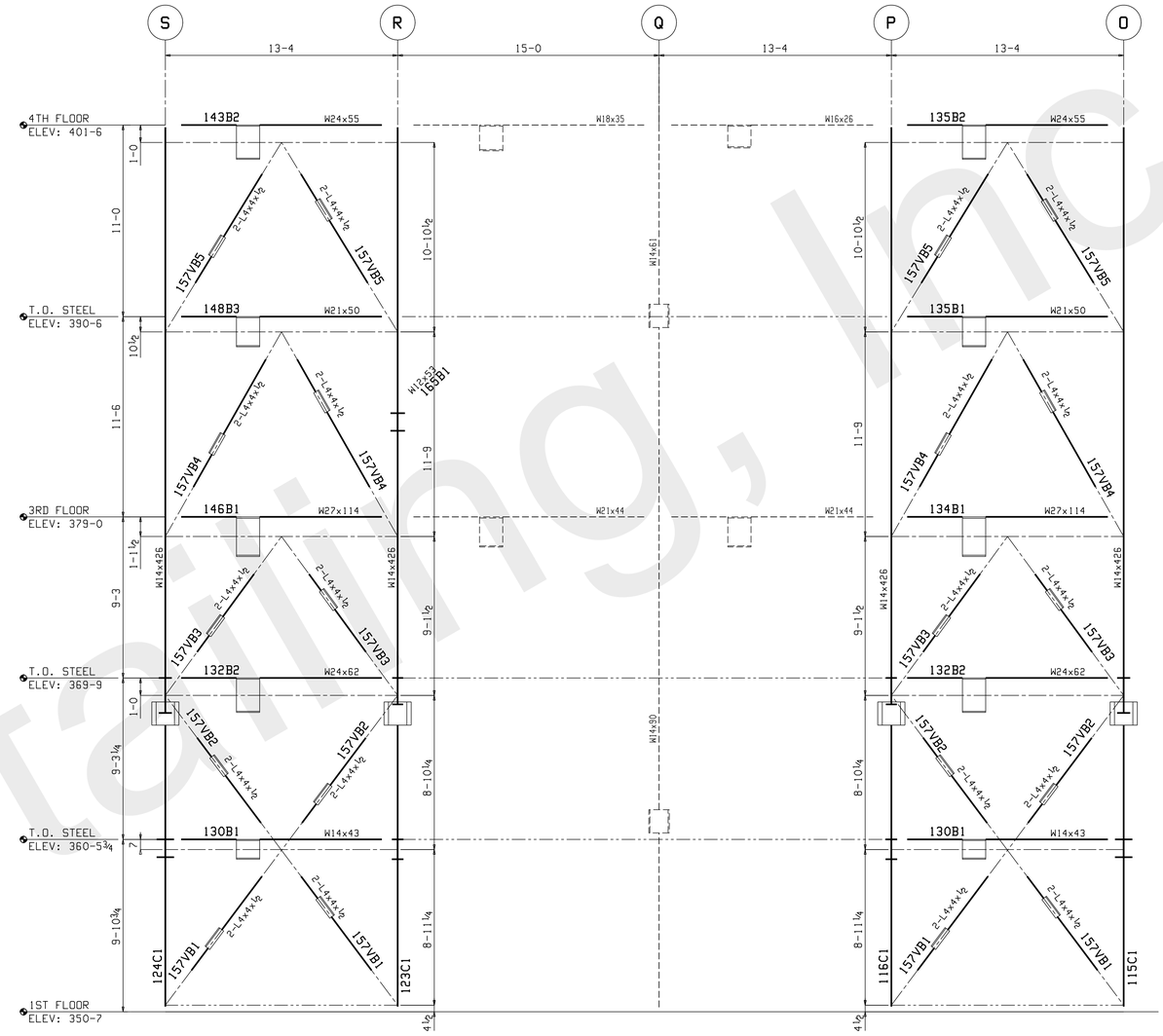

11 E104 SECTION

12 E104 SECTION

BRACING ELEVATION ALONG ROW "1.5"

(LOOKING WEST)

NOTE:
SEE SHEET #E106 FOR
TYPICAL BRACING SECTIONS

DRAWINGS PREPARED BY,
GLOBAL DETAILING, INC.
JOB # 11-372

NO	DATE	ISSUES OR REVISIONS	BY
2	Jul 20 2011	FIELD USE	TC
1	Jun 14 2011	APP #2	TDB
0	May 6 2011	APPROVAL	TC

JOB NAME: THE LUBRIZOL CORP
CUSTOMER: CHEMSTRESS CONSTRUCTION
JOB#: 11-509
DESCRIPTION: BRACING ELEVATIONS

SCALE	DRAWN BY	CHECK	O.K.
–	MC	AQ	–

FormulaFabricating LLC
5200 W. 164th. Street o Brook Park, Ohio 44142
Phone 216-898-5788 o Fax 216-898-5898
formulafabricating.com

DATE: 5.6.11 SHEET: E104

Global Detailing, Inc

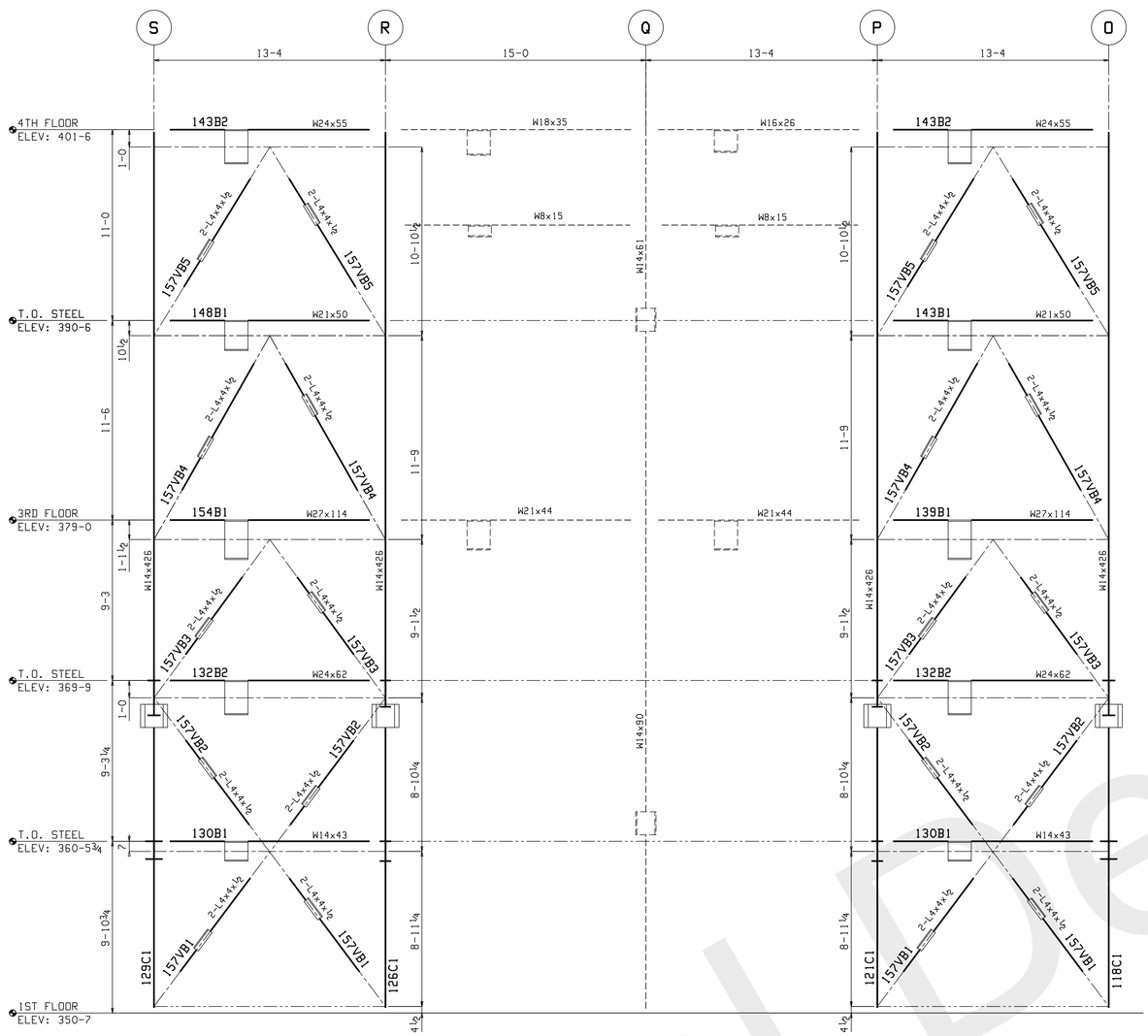

13 E105 SECTION

14 E105 SECTION

BRACING ELEVATION ALONG ROW "1.75"

(LOOKING WEST)

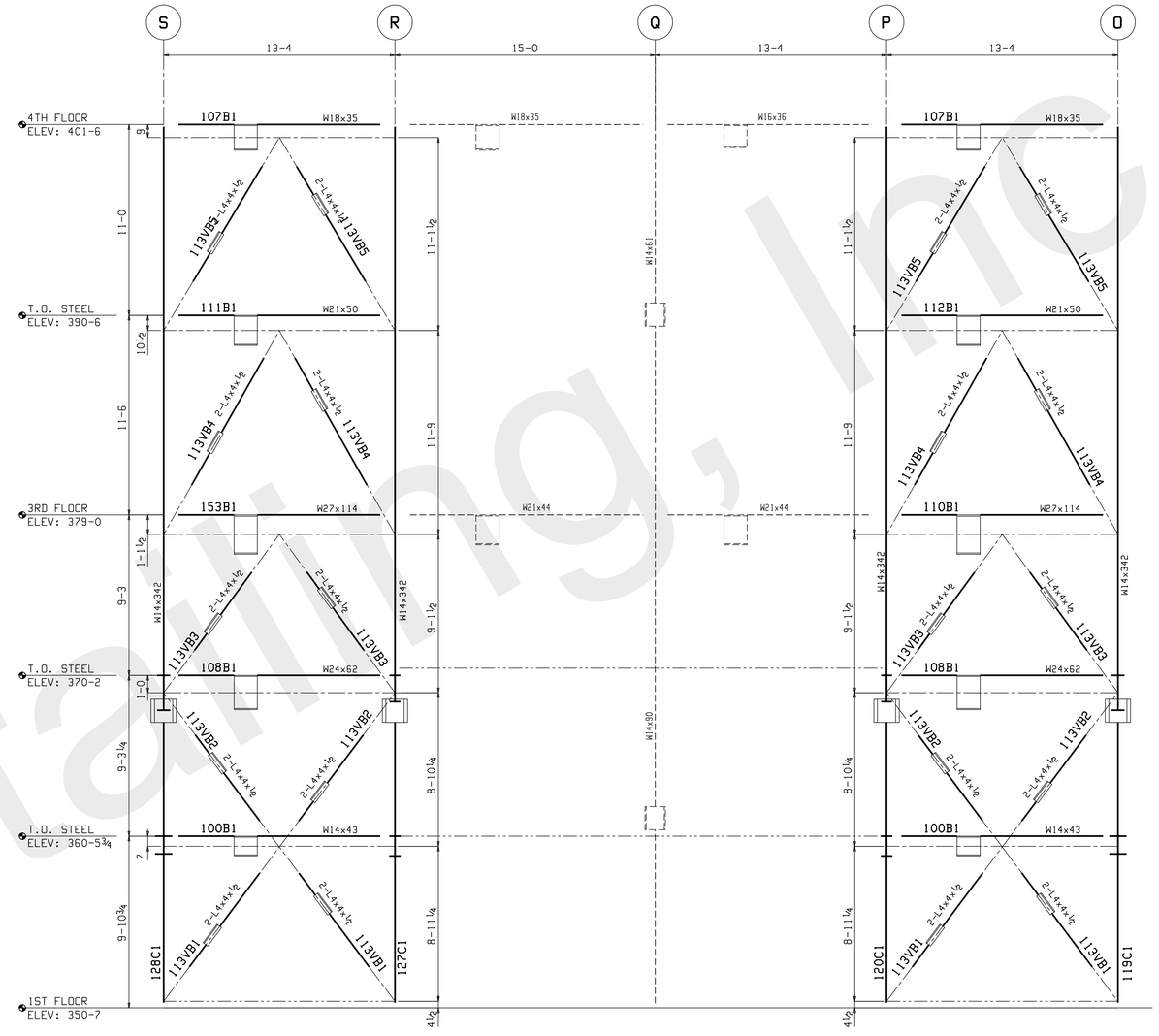

15 E105 SECTION

16 E105 SECTION

BRACING ELEVATION ALONG ROW "2"

(LOOKING WEST)

NOTE:
SEE SHEET #E106 FOR
TYPICAL BRACING SECTIONS

DRAWINGS PREPARED BY,
GLOBAL DETAILING, INC.
JOB # 11-372

NO	DATE	ISSUES OR REVISIONS	BY
2	Jul 20 2011	FIELD USE	TC
1	Jun 14 2011	APP #2	TDB
0	May 6 2011	APPROVAL	TC

JOB NAME: THE LUBRIZOL CORP
CUSTOMER: CHEMSTRESS CONSTRUCTION
JOB#: 11-509
DESCRIPTION: BRACING ELEVATIONS

SCALE	DRAWN BY	CHECK	O.K.
–	MC	AQ	–

FormulaFabricating LLC
5200 W. 164th. Street ▫ Brook Park, Ohio 44142
Phone 216-898-5788 ▫ Fax 216-898-5898
formulafabricating.com

DATE: 5.6.11 SHEET E105

Global Detailing, Inc

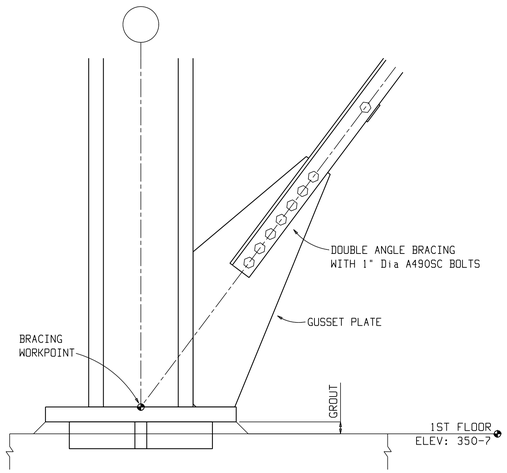

TYPICAL BRACING DETAIL AT 1ST FLOOR

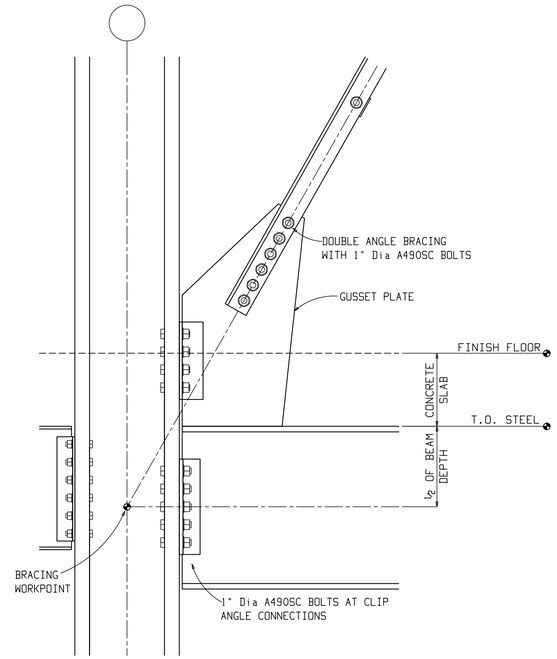

TYPICAL BRACING DETAIL AT MAIN FLOORS

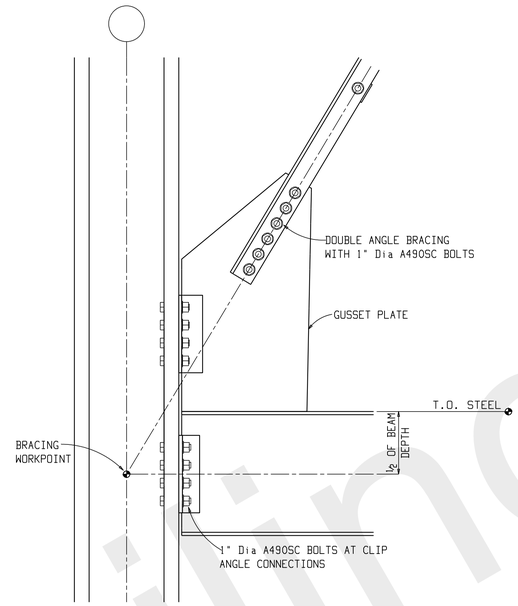

TYPICAL BRACING DETAIL AT INTERMEDIATES

Global Detailing, Inc

DRAWINGS PREPARED BY,
GLOBAL DETAILING, INC.
JOB # 11-372

NO	DATE	ISSUES OR REVISIONS	BY
2	Jul 20 2011	FIELD USE	TC
1	Jun 14 2011	APP #2	TDB
0	May 6 2011	APPROVAL	TC

JOB NAME: THE LUBRIZOL CORP
CUSTOMER: CHEMSTRESS CONSTRUCTION
JOB#: 11-509
DESCRIPTION: SECTIONS

SCALE	DRAWN BY	CHECK	O.K.
-	MC	AQ	-

FormulaFabricating LLC
5200 W. 164th. Street o Brook Park, Ohio 44142
Phone 216-898-5788 o Fax 216-898-5898
formulafabricating.com

DATE: 5.6.11 SHEET E106

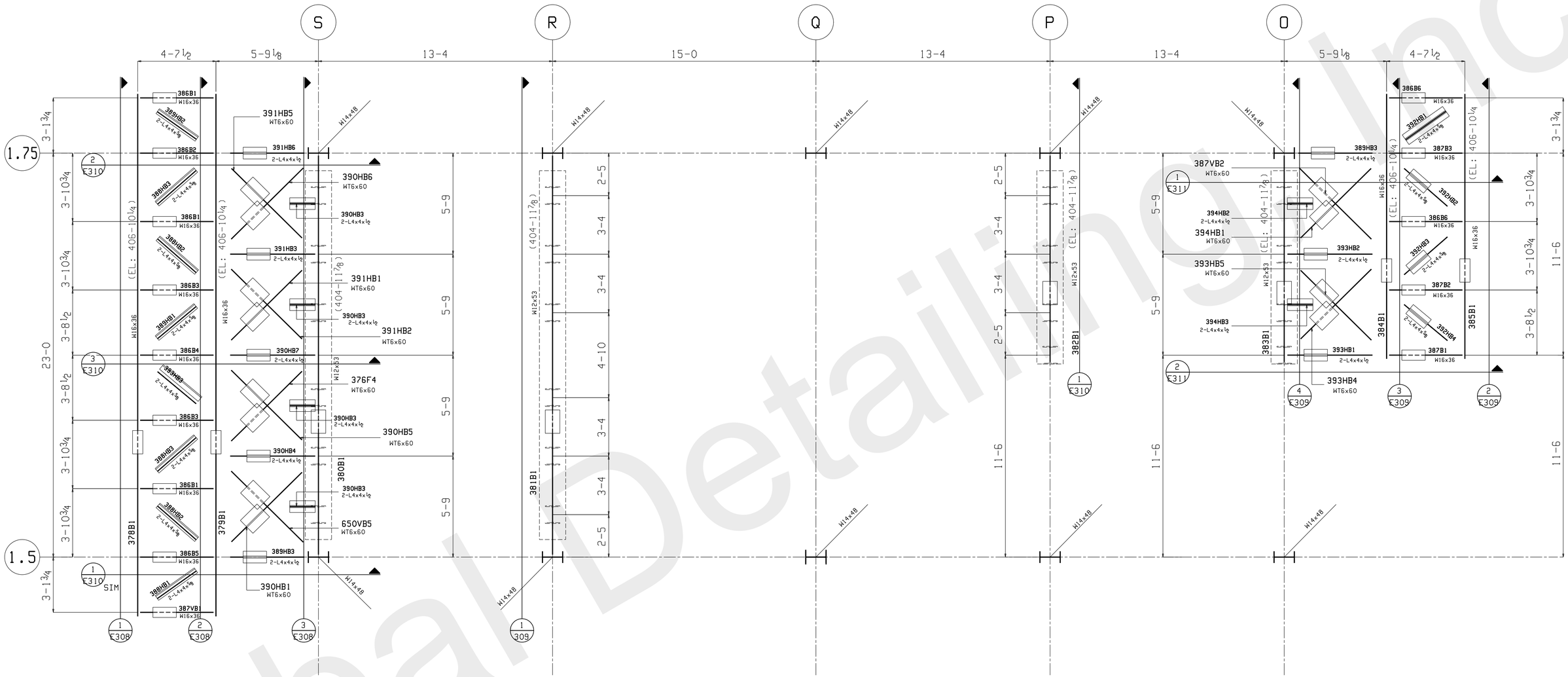

DRYER SUPPORT PLAN - @ 4TH FLOOR

1) TOP OF STEEL. @ 4th FLOOR - EL: 401-6
2) TOP OF STEEL @ SUPPORT - EL: 404-11⅞ (U.N.O.)

NO	DATE	ISSUES OR REVISIONS	BY
1	Sep 11 2011	FOR FIELD	MC
0	Aug 10 2011	FOR APPROVAL	MC

DRAWINGS PREPARED BY, GLOBAL DETAILING, INC. JOB # 11-372

JOB NAME: THE LUBRIZOL CORP
CUSTOMER: CHEMSTRESS CONSTRUCTION
JOB#: 11-509
DESCRIPTION: REACTOR SUPPORTS @ 4TH FLR

SCALE	DRAWN BY	CHECK	O.K.
–	MC	–	–

FormulaFabricating LLC
5200 W. 164th. Street ▫ Brook Park, Ohio 44142
Phone 216-898-5788 ▫ Fax 216-898-5898
formulafabricating.com

DATE: 8.10.11 SHEET: E307

Global Detailing Inc

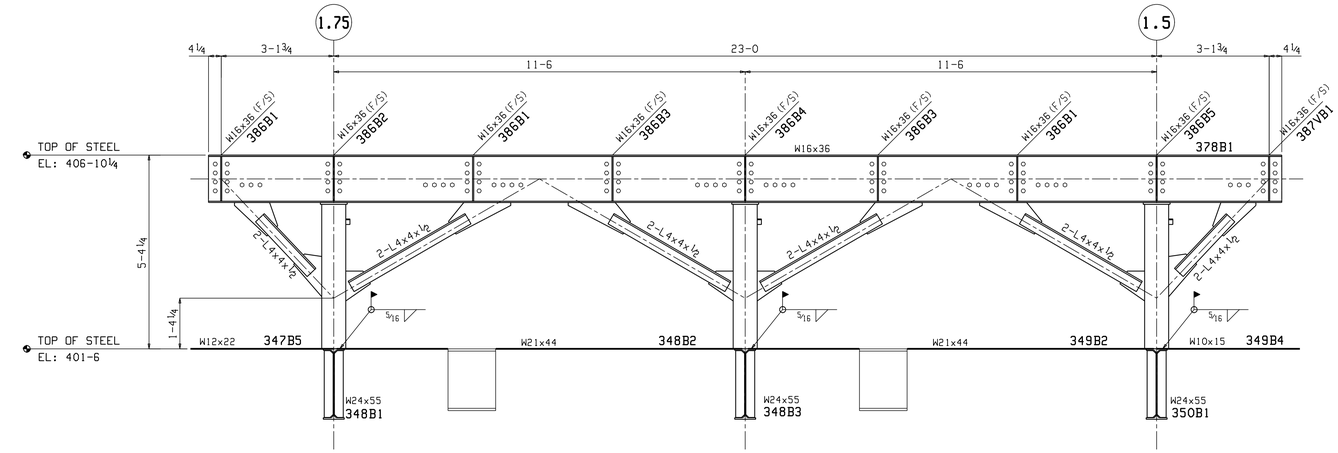

1 E308 SECTION

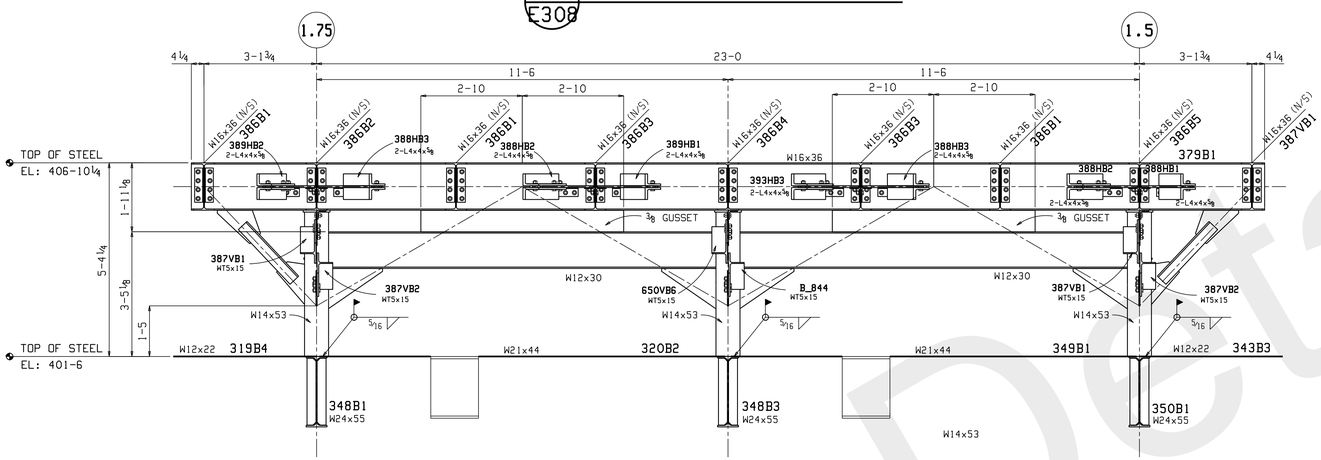

2 E308 SECTION

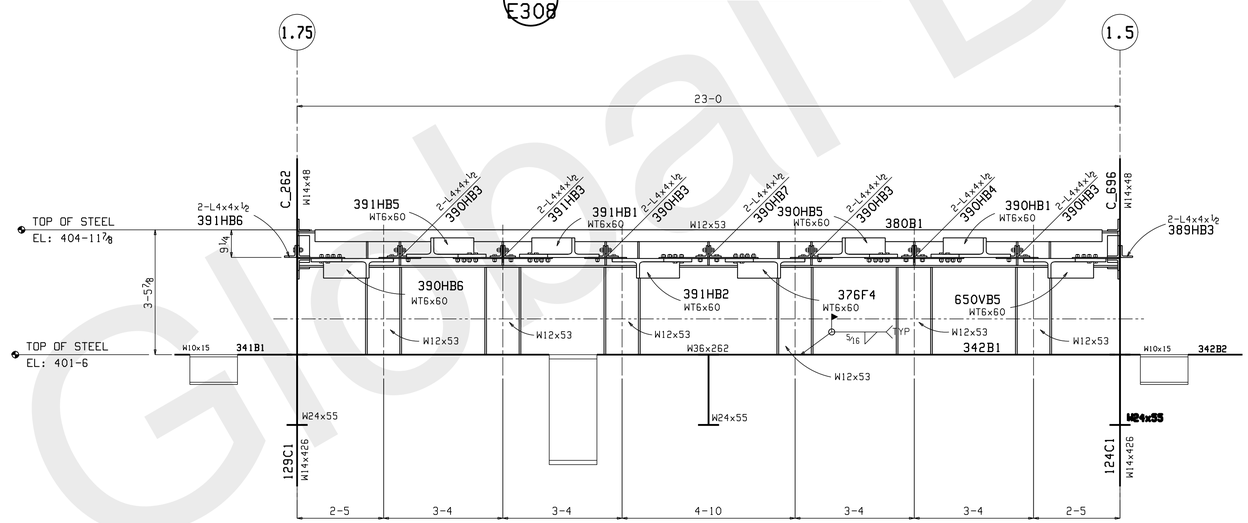

3 E308 SECTION

DRAWINGS PREPARED BY, GLOBAL DETAILING, INC. JOB # 11-372

NO	DATE	ISSUES OR REVISIONS	BY
1	Sep 1 2011	FOR FIELD	MC
0	Aug 10 2011	FOR APPROVAL	MC

JOB NAME: THE LUBRIZOL CORP
CUSTOMER: CHEMSTRESS CONSTRUCTION
JOB#: 11-509
DESCRIPTION: REACTOR SUPPORTS @ 4TH FLR

SCALE	DRAWN BY	CHECK	O.K.
–	MC	–	–

FormulaFabricating LLC
5200 W. 164th. Street • Brook Park, Ohio 44142
Phone 216-898-5788 • Fax 216-898-5898
formulafabricating.com

DATE: 8.10.11 SHEET: E308

Global Detailing, Inc

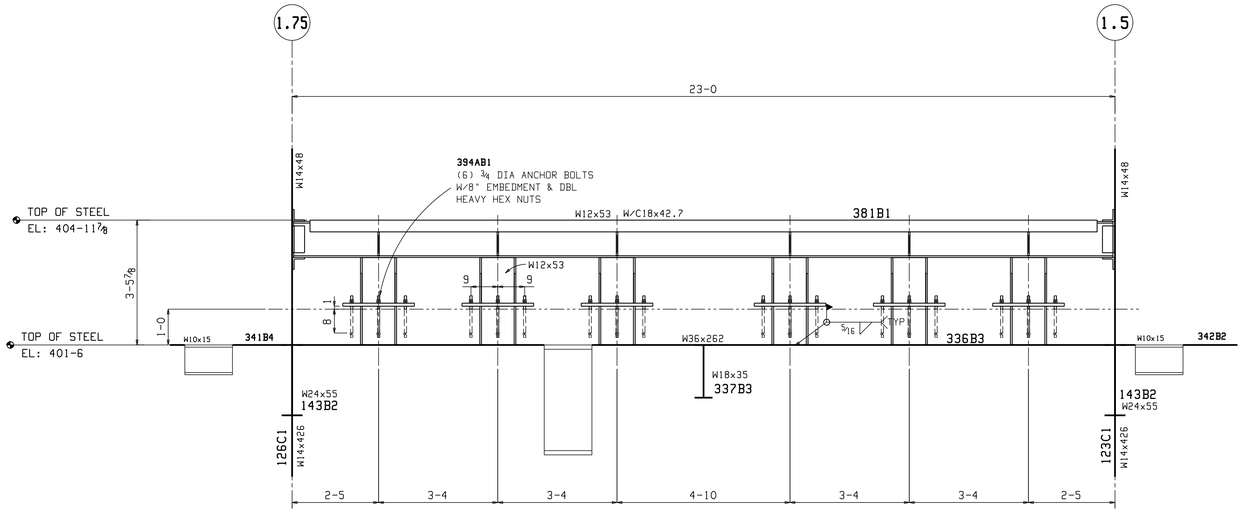

1 E309 SECTION

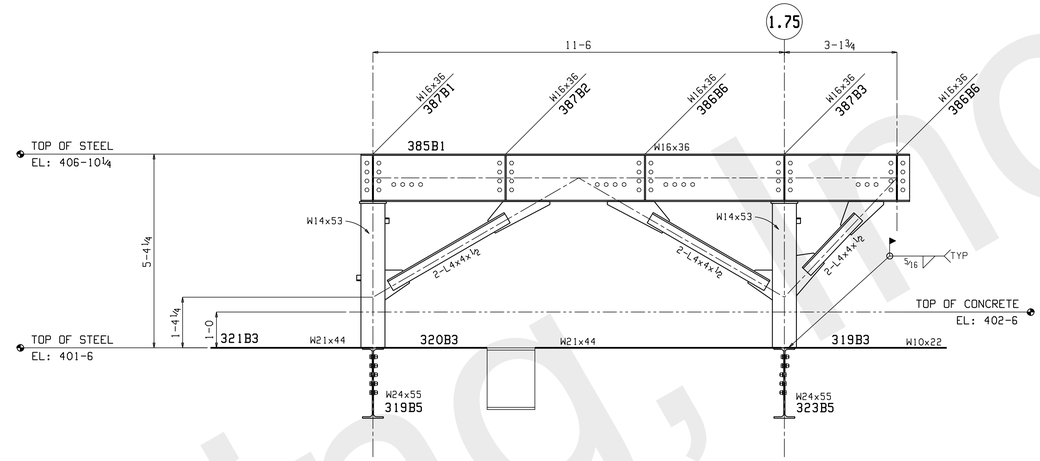

2 E309 SECTION

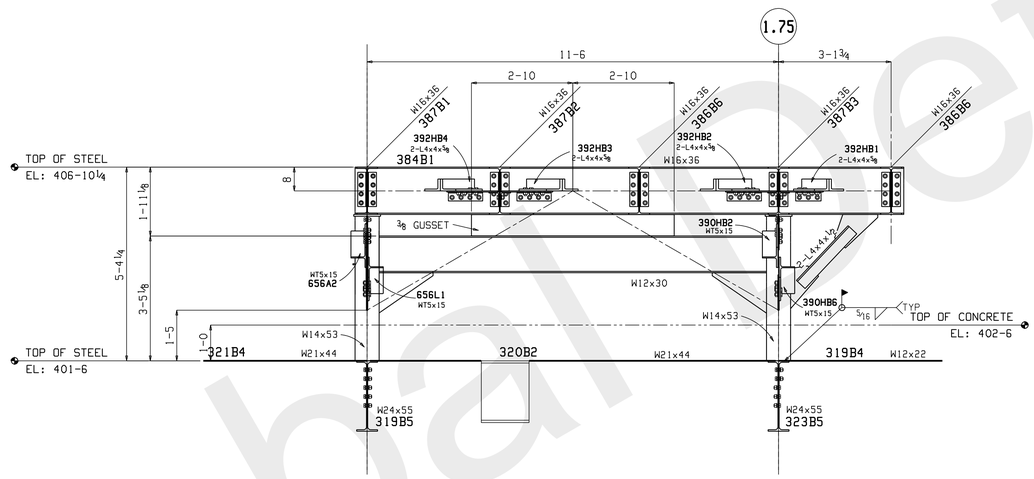

3 E309 SECTION

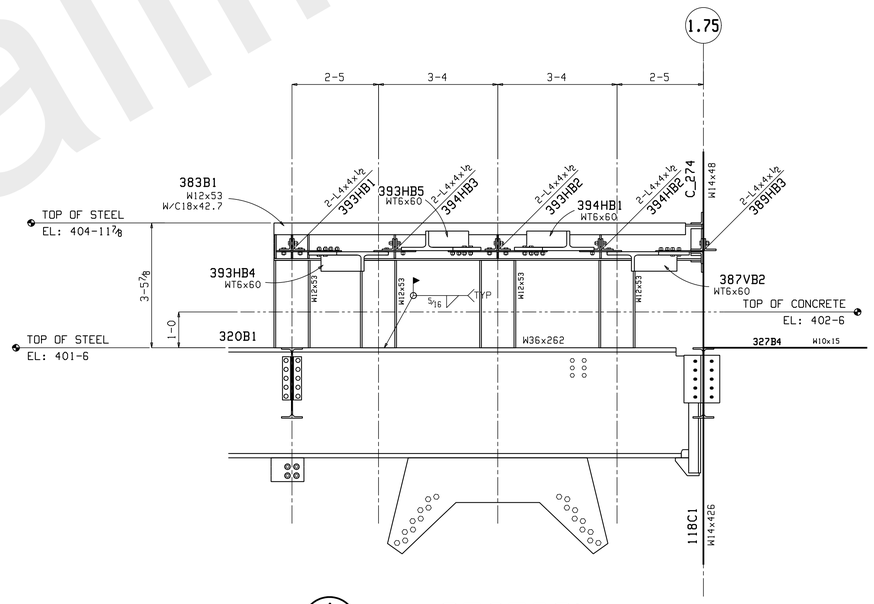

4 E309 SECTION

DRAWINGS PREPARED BY,
GLOBAL DETAILING, INC.
JOB # 11-372

NO	DATE	ISSUES OR REVISIONS	BY
1	Sep 1 2011	FOR FIELD	MC
0	Aug 10 2011	FOR APPROVAL	MC

JOB NAME: THE LUBRIZOL CORP
CUSTOMER: CHEMSTRESS CONSTRUCTION
JOB#: 11-509
DESCRIPTION: REACTOR SUPPORTS @ 4TH FLR

SCALE	DRAWN BY	CHECK	O.K.
–	MC	–	–

FormulaFabricating LLC
5200 W. 164th. Street ◦ Brook Park, Ohio 44142
Phone 216-898-5700 ◦ Fax 216-898-5838
formulafabricating.com

DATE: 8.10.11 SHEET: E309

Global Detailing, Inc

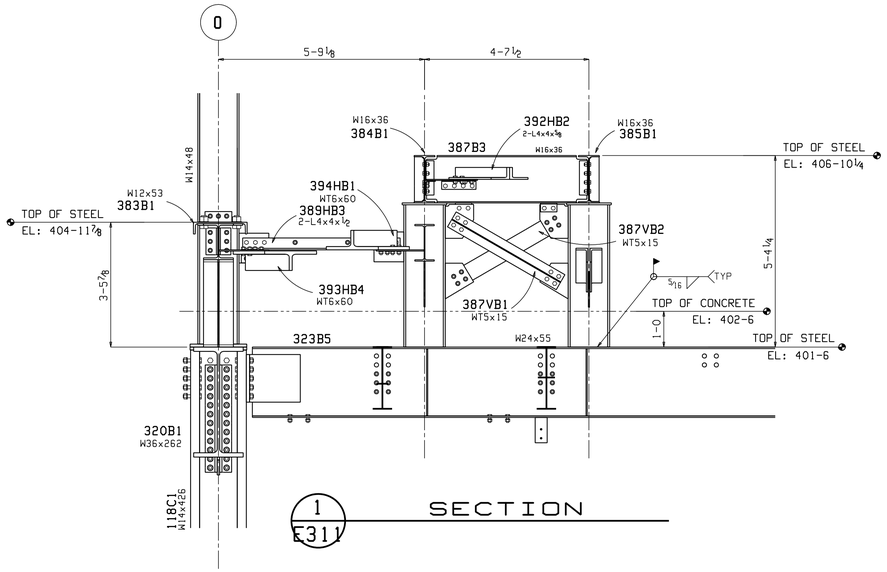

1 E311 SECTION

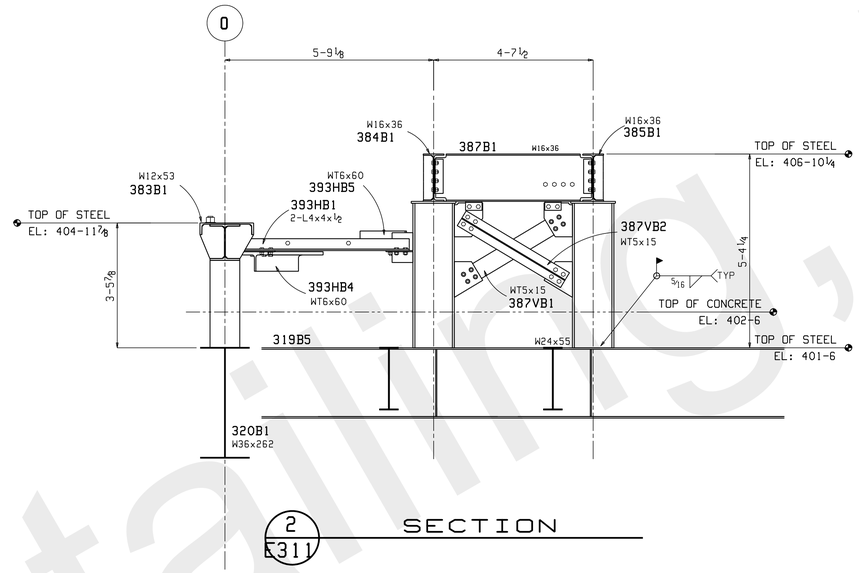

2 E311 SECTION

Global Detailing, Inc

DRAWINGS PREPARED BY,
GLOBAL DETAILING, INC.
JOB # 11-372

NO	DATE	ISSUES OR REVISIONS	BY
1	Sep 1 2011	FOR FIELD	MC
0	Aug 10 2011	FOR APPROVAL	MC

JOB NAME: THE LUBRIZOL CORP
CUSTOMER: CHEMSTRESS CONSTRUCTION
JOB#: 11-509
DESCRIPTION: REACTOR SUPPORTS @ 4TH FLR

SCALE	DRAWN BY	CHECK	O.K.
-	MC	-	-

FormulaFabricating LLC
5200 W. 164th. Street o Brook Park, Ohio 44142
Phone 216-898-5788 o Fax 216-898-5898
formulafabricating.com

DATE: 8.10.11 SHEET: E311

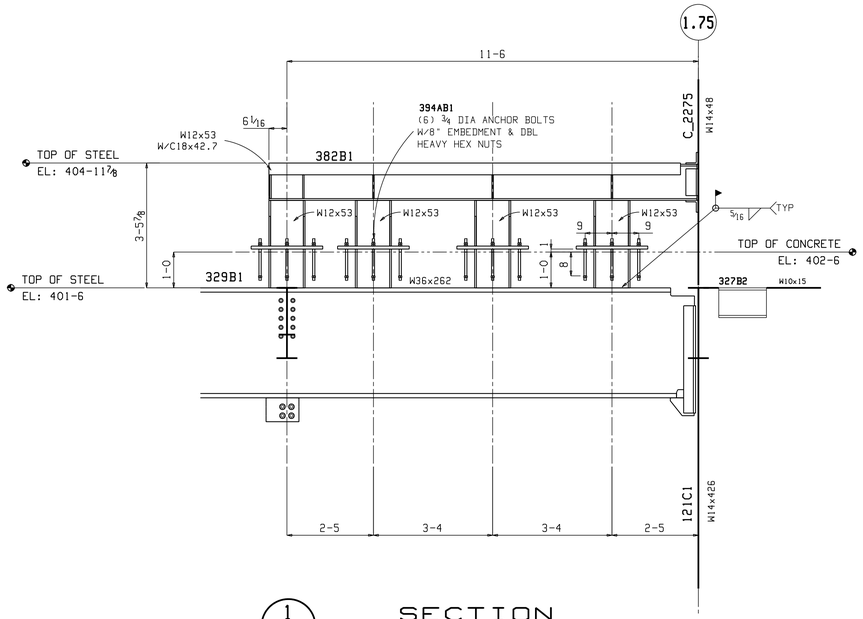

1 E310 SECTION

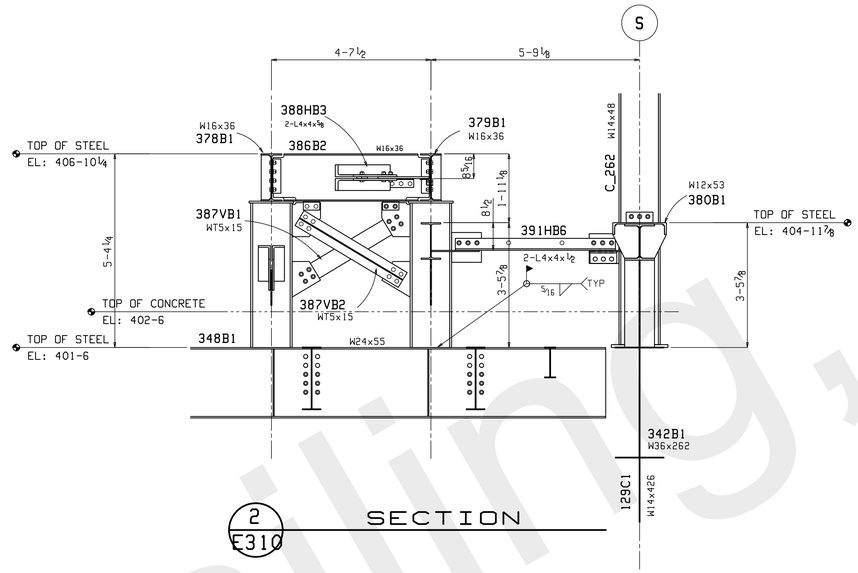

2 E310 SECTION

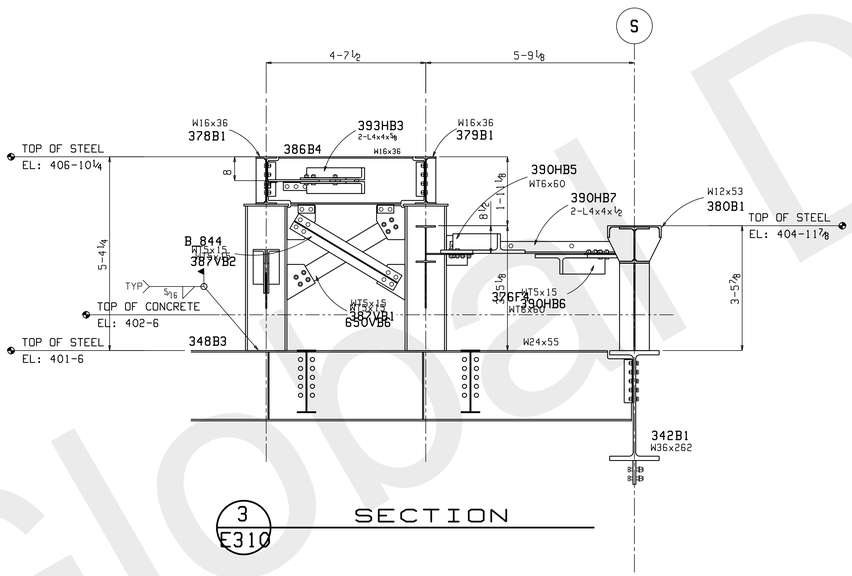

3 E310 SECTION

Global Detailing, Inc

DRAWINGS PREPARED BY,
GLOBAL DETAILING, INC.
JOB # 11-372

NO	DATE	ISSUES OR REVISIONS	BY
1	Sep 1 2011	FOR FIELD	MC
0	Aug 10 2011	FOR APPROVAL	MC

JOB NAME: THE LUBRIZOL CORP
CUSTOMER: CHEMSTRESS CONSTRUCTION
JOB#: 11-509
DESCRIPTION: REACTOR SUPPORTS @ 4TH FLR

SCALE	DRAWN BY	CHECK	O.K.
-	MC	-	-

FormulaFabricating LLC
5200 W. 164th. Street o Brook Park, Ohio 44142
Phone 216-898-5788 o Fax 216-898-5898
formulafabricating.com

DATE: 8.10.11 SHEET: E310