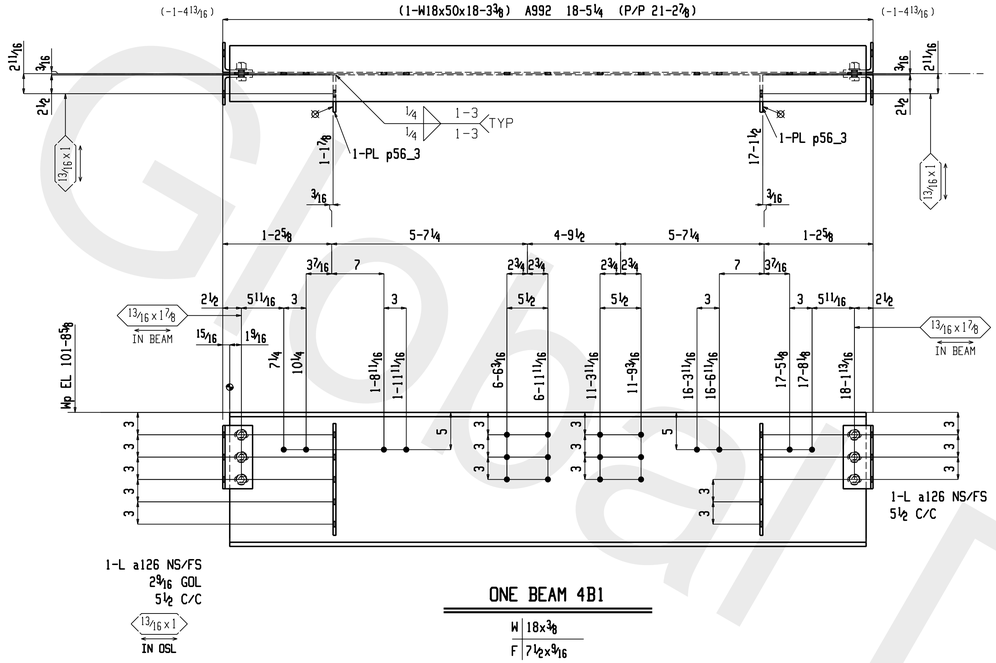

ONE BEAM 4B1

W	18x⅜
F	7½x⁹⁄₁₆

SHOP BOLTS:
6-¾x2 A325N

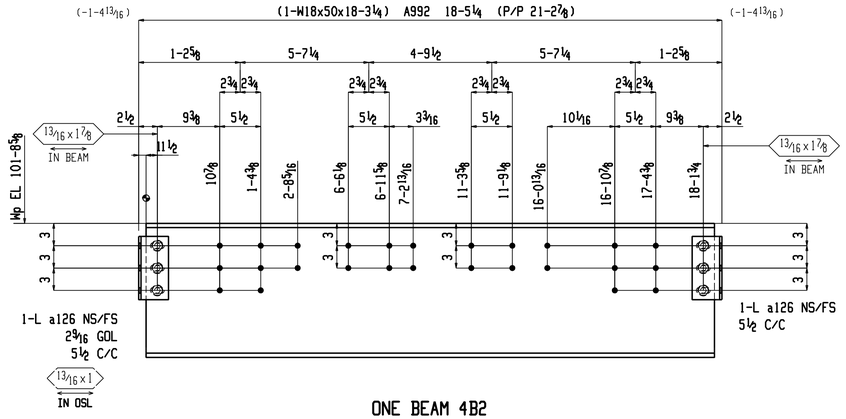

ONE BEAM 4B2

W	18x⅜
F	7½x⁹⁄₁₆

SHOP BOLTS:
6-¾x2 A325N

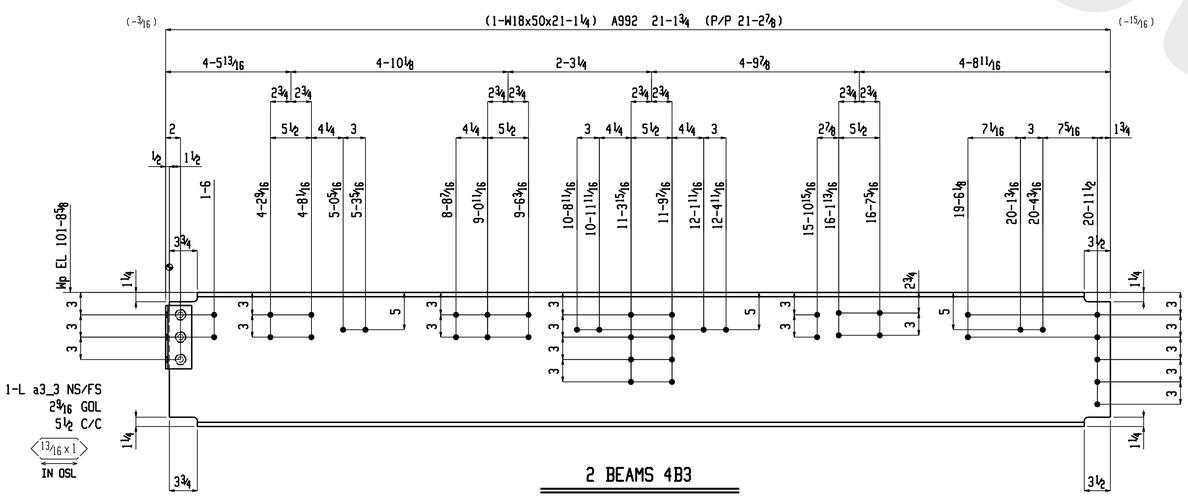

2 BEAMS 4B3

W	18x⅜
F	7½x⁹⁄₁₆

SHOP BOLTS:
3-¾x2 A325N

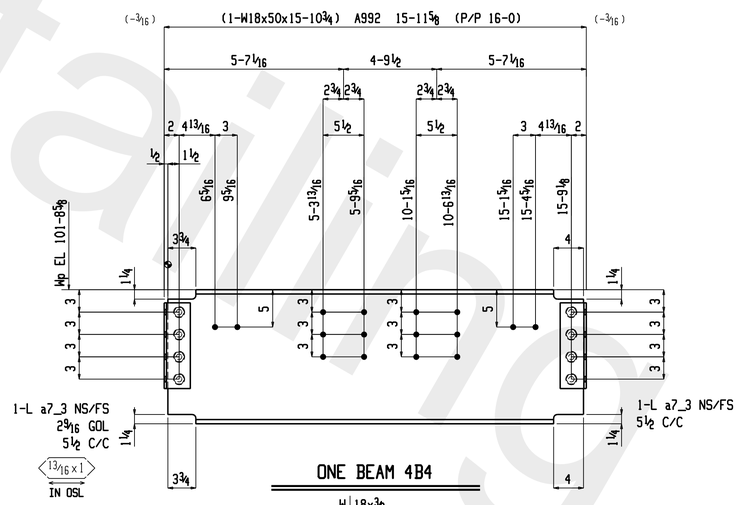

ONE BEAM 4B4

W	18x⅜
F	7½x⁹⁄₁₆

SHOP BOLTS:
8-¾x2 A325N

BILL OF MATERIAL

LINE #	QTY TOTAL	PC MARK	DESCRIPTION	LENGTH		REMARKS	WEIGHT TOTAL	ADVANCE MILL #	SEQUENCE
	ONE	4B1	BEAM				961		3
	1	4B1	W18x50	18	3⅜	A992	915		
	4	a126	L4x4x⁵⁄₁₆	0	8½	A36	24		
	2	p56_3	PL⅜x5	1	3	A36	16		
	6		¾ Dia A325N	0	2	1HD WASH	6		
			FIELD BOLTS						
	12		¾ Dia A325N	0	2¼	2HD WASH			
	18		¾ Dia A325N	0	1¾	1HD WASH			
	ONE	4B2	BEAM				944		3
	1	4B2	W18x50	18	3¼	A992	914		
	4	a126	L4x4x⁵⁄₁₆	0	8½	A36	24		
	6		¾ Dia A325N	0	2	1HD WASH	6		
			FIELD BOLTS						
	20		¾ Dia A325N	0	1¾	1HD WASH			
	2	4B3	BEAM				2142		3
	2	4B3	W18x50	21	1¼	A992	2112		
	4	a3_3	L4x3½x⁵⁄₁₆	0	8½	A36	24		
	6		¾ Dia A325N	0	2	1HD WASH	6		
			FIELD BOLTS						
	56		¾ Dia A325N	0	1¾	1HD WASH			
	ONE	4B4	BEAM				835		3
	1	4B4	W18x50	15	10¾	A992	795		
	4	a7_3	L4x3½x⁵⁄₁₆	0	11½	A36	32		
	8		¾ Dia A325N	0	2	1HD WASH	8		
			FIELD BOLTS						
	8		¾ Dia A325N	0	2¼	2HD WASH			
	4		¾ Dia A325N	0	2	1HD WASH			
	4		¾ Dia A325N	0	1¾	1HD WASH			

PAINT NOTE:

1ST COAT: SHERWIN WILLIAMS MACROPOXY 646 HS
AT 5.0 MILS DRY FILM THICKNESS

2ND COAT: SHERWIN WILLIAMS MACROPOXY 646 HS
AT 5.0 MILS DRY FILM THICKNESS

3RD COAT: SHERWIN WILLIAMS COROTHANE II
AT 2.0 MILS DRY FILM THICKNESS

DESCRIPTION: FABRICATION DETAILS
REF. DWG.: –
CUSTOMER: ROBERTS & SCHAEFER COMPANY

Specialty Construction & Maintenance Service
CONSTRUCT INCORPORATED
1514 Cargill Ave.
Wilson, NC 27893
PHONE - (252) 246-0639
FAX - (252) 246-1616

JOB NO.	8214-FS	JOB TITLE:	SGS UNIT 4 - ASH STORAGE SILO
HOLES	13⁄16 DIA.	EXC. NOTED	U.N.O.
CLEAN SPEC	SSPC-SP6	LOCATION:	PALATKA, FL
FINISH	SEE NOTE	ARCH. OR ENGR	ROBERTS & SCHAEFER COMPANY
DRY FIL THICKNESS	SEE NOTE	DRAWN	TC
ELECTRODE CLASS	E70XX	DATE	11-28-11
		CHKD	GD
		DATE	12-2011

DRAWING NO. 4
REV NO. 1

STRUCTURE UNSTABLE UNTIL ERECTION IS COMPLETE. ERECTOR TO GUY AS REQUIRED.

PAINT PIECE MARK TO READ RIGHT SIDE UP ON LEFT END OF PIECE. ERECT WITH MARK AT SAME END AS SHOWN ON ERECTION PLAN AND RIGHT SIDE UP.

DRAWINGS PREPARED BY, GLOBAL DETAILING, INC.
JOB # 11-387

REV	DATE	BY	DESCRIPTION
1	Dec 11 2011	TC	FABRICATION
0	Nov 29 2011	TC	FOR APPROVAL

Global Detailing, Inc.

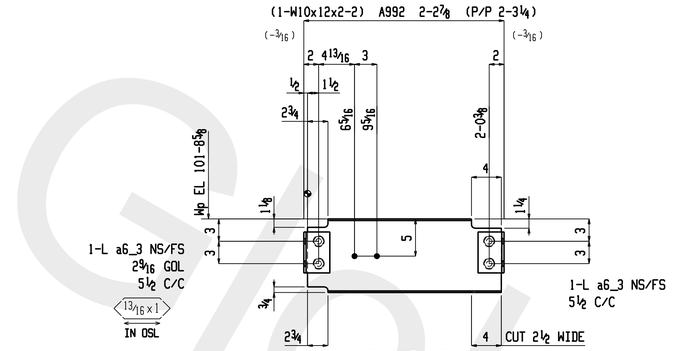

2 BEAMS 6B1

W	9 7/8 x 3/16
F	3 15/16 x 3/16

SHOP BOLTS:
4-3/4x2 A325N

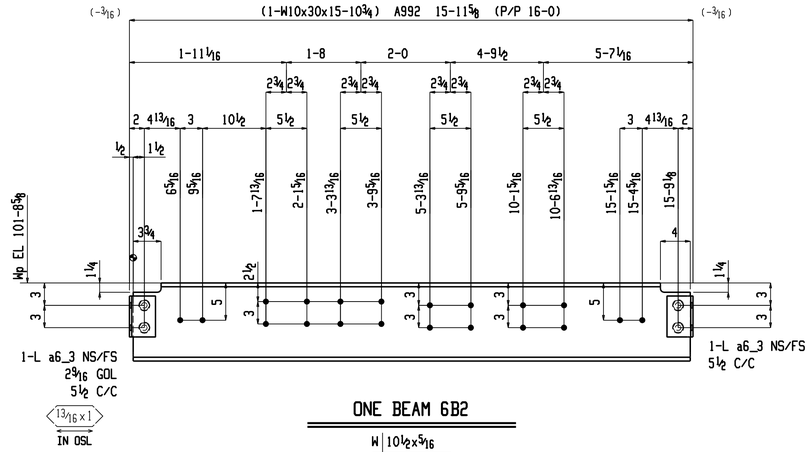

ONE BEAM 6B2

W	10 1/2 x 5/16
F	5 13/16 x 1/2

SHOP BOLTS:
4-3/4x2 A325N

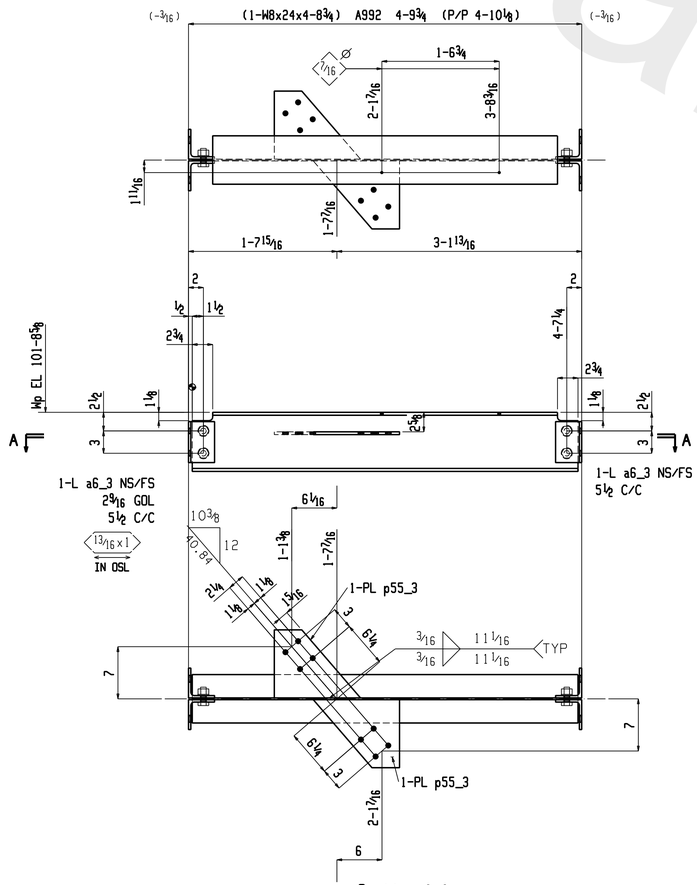

Section A-A

6B3

ONE BEAM 6B3

W	7 15/16 x 1/4
F	6 1/2 x 3/8

SHOP BOLTS:
4-3/4x2 A325N

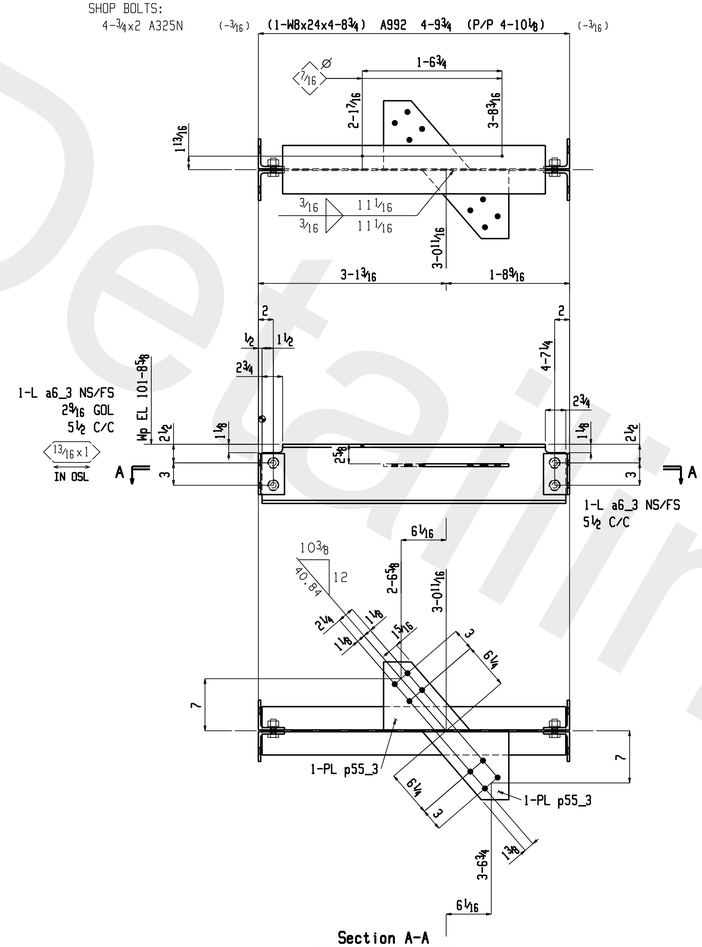

Section A-A

6B4

ONE BEAM 6B4

W	7 15/16 x 1/4
F	6 1/2 x 3/8

SHOP BOLTS:
4-3/4x2 A325N

DRAWINGS PREPARED BY, GLOBAL DETAILING, INC. JOB # 11-387

REV	DATE	BY	DESCRIPTION
1	Dec 11 2011	TC	FABRICATION
0	Nov 29 2011	TC	FOR APPROVAL

BILL OF MATERIAL

LINE #	QTY TOTAL	PC MARK	DESCRIPTION	LENGTH		REMARKS	WEIGHT TOTAL	ADVANCE MILL #	SEQUENCE
	2	6B1	BEAM				92		3
	2	6B1	W10x12	2	2	A992	52		
	8	a6_3	L4x3 1/2x5/16	0	5 1/2	A36	32		
	8		3/4 Dia A325N	0	2	1HD WASH	8		
			FIELD BOLTS						
	4		3/4 Dia A325N	0	1 3/4	1HD WASH			
	ONE	6B2	BEAM				497		3
	1	6B2	W10x30	15	10 3/4	A992	477		
	4	a6_3	L4x3 1/2x5/16	0	5 1/2	A36	16		
	4		3/4 Dia A325N	0	2	1HD WASH	4		
			FIELD BOLTS						
	8		3/4 Dia A325N	0	2 1/4	2HD WASH			
	12		3/4 Dia A325N	0	1 3/4	1HD WASH			
	ONE	6B3	BEAM				158		3
	1	6B3	W8x24	4	8 3/4	A992	114		
	4	a6_3	L4x3 1/2x5/16	0	5 1/2	A36	16		
	2	p55_3	PL3 3/8x9 1/8	0	11 9/16	A36	24		
	4		3/4 Dia A325N	0	2	1HD WASH	4		
			FIELD BOLTS						
	8		3/4 Dia A325N	0	1 3/4	1HD WASH			
	ONE	6B4	BEAM				158		3
	1	6B4	W8x24	4	8 3/4	A992	114		
	4	a6_3	L4x3 1/2x5/16	0	5 1/2	A36	16		
	2	p55_3	PL3 3/8x9 1/8	0	11 9/16	A36	24		
	4		3/4 Dia A325N	0	2	1HD WASH	4		
			FIELD BOLTS						
	8		3/4 Dia A325N	0	1 3/4	1HD WASH			

PAINT NOTE:

1ST COAT: SHERWIN WILLIAMS MACROPOXY 646 HS
AT 5.0 MILS DRY FILM THICKNESS

2ND COAT: SHERWIN WILLIAMS MACROPOXY 646 HS
AT 5.0 MILS DRY FILM THICKNESS

3RD COAT: SHERWIN WILLIAMS COROTHANE II
AT 2.0 MILS DRY FILM THICKNESS

DESCRIPTION: FABRICATION DETAILS
REF. DWG.: -
CUSTOMER: ROBERTS & SCHAEFER COMPANY

Specialty Construction & Maintenance Service
CONSTRUCT INCORPORATED
1514 Cargill Ave.
Wilson, NC 27893
PHONE - (252) 246-0639
FAX - (252) 246-1616

JOB NO.	8214-FS	JOB TITLE:	SGS UNIT 6 - ASH STORAGE SILO
HOLES	13/16 DIA. EXC. NOTED U.N.O.	LOCATION:	PALATKA, FL
CLEAN SPEC	SSPC-SP6	ARCH. OR ENGR	ROBERTS & SCHAEFER COMPANY
FINISH	SEE NOTE	DRAWN TC	DATE 11-28-11 CHKD GD DATE 12-2011
DRY FILM THICKNESS	SEE NOTE	STRUCTURE UNSTABLE UNTIL ERECTION IS COMPLETE. ERECTOR TO GUY AS REQUIRED.	PAINT PIECE MARK TO HEAD RIGHT SIDE UP ON LEFT END OF PIECE. ERECT WITH MARK AT SAME END AS SHOWN ON ERECTION PLAN AND RIGHT SIDE UP.
ELECTRODE CLASS	E70XX		

DRAWING NO. 6
REV NO. 1

Global Detailing, Inc.

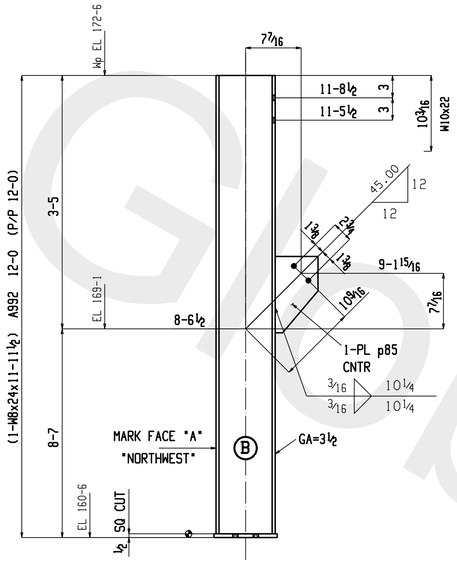

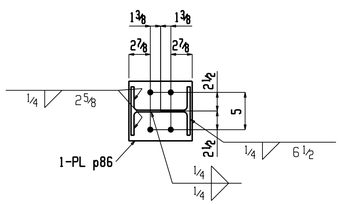

ONE COLUMN 23C1

W	7 15/16 x 1/4
F	6 1/2 x 3/8

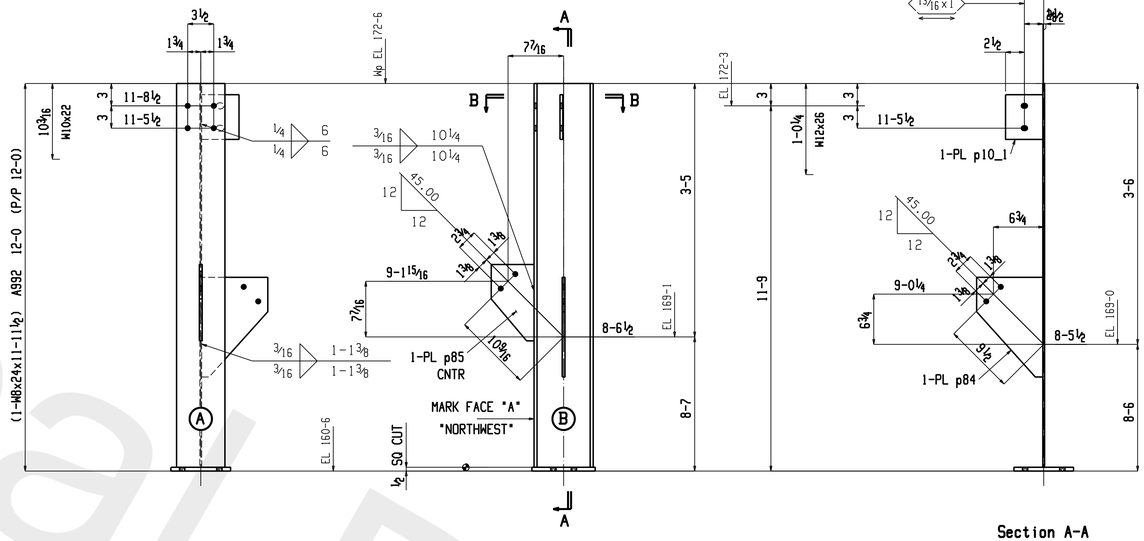

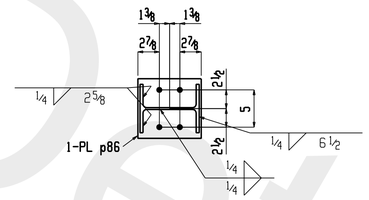

ONE COLUMN 23C2

W	7 15/16 x 1/4
F	6 1/2 x 3/8

Section A-A

23C2

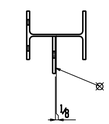

Section B-B

23C2

BILL OF MATERIAL

LINE #	QTY TOTAL	PC MARK	DESCRIPTION	LENGTH		REMARKS	WEIGHT TOTAL	ADVANCE MILL #	SEQUENCE
	ONE	23C1	COLUMN				304		1
	1	23C1	W8x24	11	11 1/2	SIE A992	287		
	1	p86	PL 1/2x8	0	8 1/2	A36	10		
	1	p85	PL 3/8x5 3/4	0	10 1/4	A36	7		
			FIELD BOLTS						
	6		3/4 Dia A325N	0	1 3/4	1HD WASH			
	ONE	23C2	COLUMN				321		1
	1	23C2	W8x24	11	11 1/2	SIE A992	287		
	1	p86	PL 1/2x8	0	8 1/2	A36	10		
	1	p84	PL 3/8x8 7/8	1	1 3/8	A36	13		
	1	p85	PL 3/8x5 3/4	0	10 1/4	A36	7		
	1	p10_1	PL 3/8x5	0	6	A36	4		
			FIELD BOLTS						
	10		3/4 Dia A325N	0	1 3/4	1HD WASH			

PAINT NOTE:

1ST COAT: SHERWIN WILLIAMS MACROPOXY 646 HS
AT 5.0 MILS DRY FILM THICKNESS

2ND COAT: SHERWIN WILLIAMS MACROPOXY 646 HS
AT 5.0 MILS DRY FILM THICKNESS

3RD COAT: SHERWIN WILLIAMS COROTHANE II
AT 2.0 MILS DRY FILM THICKNESS

DESCRIPTION: FABRICATION DETAILS

REF. DWG.: -

CUSTOMER: ROBERTS & SCHAEFER COMPANY

Specialty Construction & Maintenance Service
CONSTRUCT INCORPORATED
1514 Cargill Ave.
Wilson, NC 27893
PHONE - (252) 246-0639
FAX - (252) 246-1616

JOB NO.	8214-FS	JOB TITLE:	SGS UNIT 23 - ASH STORAGE SILO
HOLES	13/16 DIA. EXC. NOTED U.N.O.	LOCATION:	PALATKA, FL
CLEAN SPEC	SSPC-SP6	ARCH. OR ENGR	ROBERTS & SCHAEFER COMPANY
FINISH	SEE NOTE	DRAWN TC	DATE 11-28-11 CHKD GD DATE 12-2011
DRY FILM THICKNESS	SEE NOTE	STRUCTURE UNSTABLE UNTIL ERECTION IS COMPLETE. ERECTOR TO GUY AS REQUIRED.	PAINT PIECE MARK TO READ RIGHT SIDE UP ON LEFT END OF PIECE. ERECT WITH MARK AT SAME END AS SHOWN ON ERECTION PLAN AND RIGHT SIDE UP.
ELECTRODE CLASS	E70XX		

DRAWINGS PREPARED BY, GLOBAL DETAILING, INC. JOB # 11-387

REV	DATE	BY	DESCRIPTION
1	Dec 12 2011	TC	FABRICATION
0	Nov 29 2011	TC	FOR APPROVAL

DRAWING NO. 23

REV NO. 1

Global Detailing, Inc.

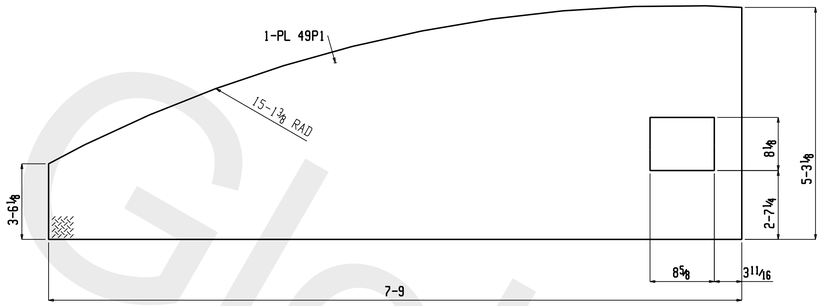

ONE PLATE 49P1

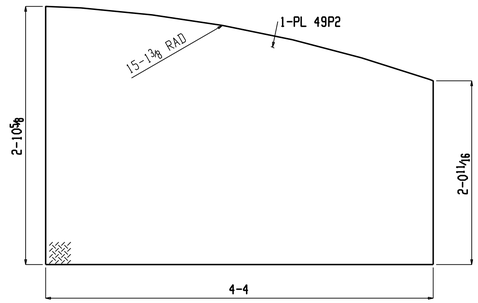

ONE PLATE 49P2

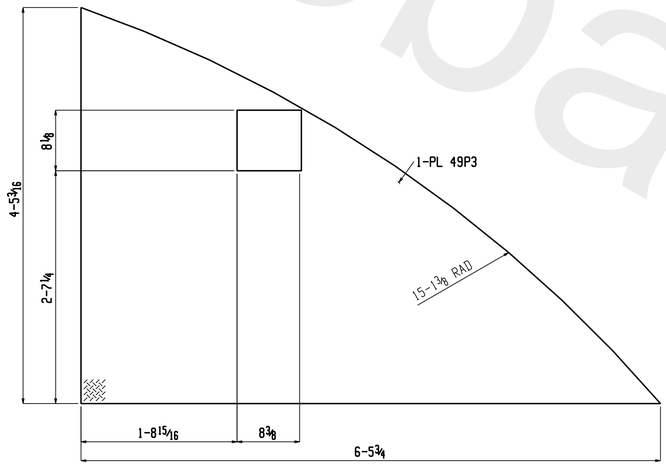

ONE PLATE 49P3

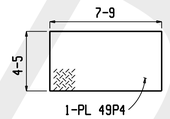

ONE PLATE 49P4

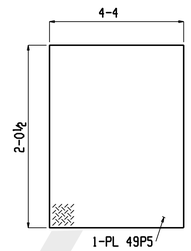

ONE PLATE 49P5

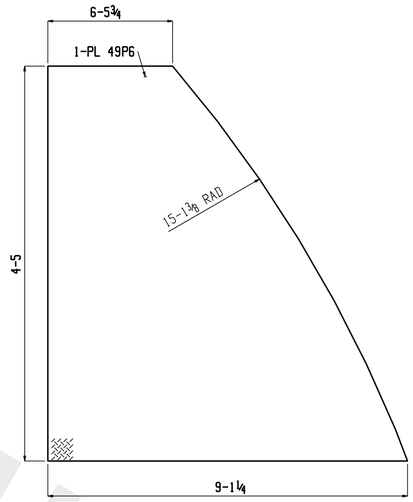

ONE PLATE 49P6

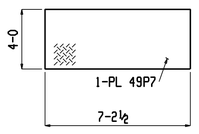

ONE PLATE 49P7

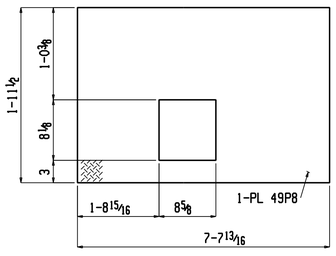

ONE PLATE 49P8

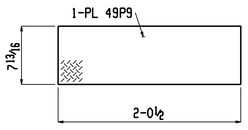

2 PLATES 49P9

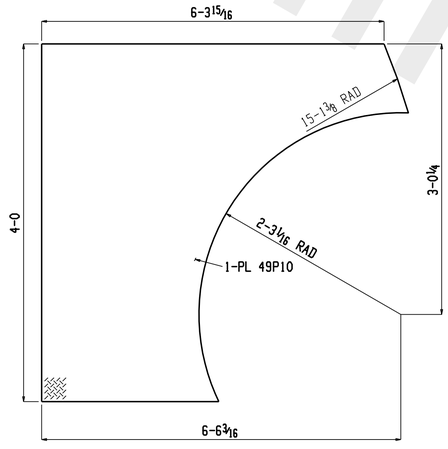

ONE ANGLE 49P10

BILL OF MATERIAL

LINE #	QTY TOTAL	PC MARK	DESCRIPTION	LENGTH		REMARKS	WEIGHT TOTAL	ADVANCE MILL #	SEQUENCE
	ONE	49P1	PLATE				461		1
	1	49P1	CPl 1/4x63 3/8	7	9	CHECKERED A36	461		
	ONE	49P2	PLATE				141		1
	1	49P2	CPl 1/4x34 3/8	4	4	CHECKERED A36	141		
	ONE	49P3	PLATE				323		1
	1	49P3	CPl 1/4x53 1/8	6	5 3/4	PLATE A36	323		
	ONE	49P4	PLATE				385		1
	1	49P4	CPl 1/4x53	7	9	A36	385		
	ONE	49P5	PLATE				100		1
	1	49P5	CPl 1/4x24 1/2	4	4	CHECKERED A36	100		
	ONE	49P6	PLATE				453		1
	1	49P6	CPl 1/4x53	9	1 1/4	CHECKERED A36	453		
	ONE	49P7	PLATE				325		1
	1	49P7	CPl 1/4x48	7	2 1/2	CHECKERED A36	325		
	ONE	49P8	PLATE				169		1
	1	49P8	CPl 1/4x23 1/2	7	7 13/16	CHECKERED A36	169		
	2	49P9	PLATE				30		1
	2	49P9	CPl 1/4x7 13/16	2	0 1/2	CHECKERED A36	30		
	ONE	49P10	ANGLE				298		1
	1	49P10	CPl 1/4x48	6	7 1/4	A36	298		

PAINT NOTE:

1ST COAT: SHERWIN WILLIAMS MACROPOXY 646 HS
AT 5.0 MILS DRY FILM THICKNESS

2ND COAT: SHERWIN WILLIAMS MACROPOXY 646 HS
AT 5.0 MILS DRY FILM THICKNESS

3RD COAT: SHERWIN WILLIAMS COROTHANE II
AT 2.0 MILS DRY FILM THICKNESS

DESCRIPTION: FABRICATION DETAILS
REF. DWG.: -
CUSTOMER: ROBERTS & SCHAEFER COMPANY

Specialty Construction & Maintenance Service
CONSTRUCT INCORPORATED
1514 Cargill Ave.
Wilson, NC 27893
PHONE - (252) 246-0639
FAX - (252) 246-1616

1	Dec 9 2011	TC	FABRICATION
0	Nov 29 2011	TC	FOR APPROVAL
REV	DATE	BY	DESCRIPTION

DRAWINGS PREPARED BY, GLOBAL DETAILING, INC. JOB # 11-387

JOB NO. 8214-FS
JOB TITLE: SGS UNIT 45 - ASH STORAGE SILO
HOLES 13/16 DIA. EXC. NOTED U.N.O.
LOCATION: PALATKA, FL
CLEAN SPEC SSPC-SP6
ARCH. OR ENGR ROBERTS & SCHAEFER COMPANY
FINISH SEE NOTE
DRAWN TC DATE 11-28-11 CHKD GD DATE 12-2011
DRY FILM THICKNESS SEE NOTE
ELECTRODE CLASS E70XX

STRUCTURE UNSTABLE UNTIL ERECTION IS COMPLETE. ERECTOR TO BRAY AS REQUIRED.

PAINT PIECE MARK TO READ RIGHT SIDE UP ON LEFT END OF PIECE. ERECT WITH MARK AT SAME END AS SHOWN ON ERECTION PLAN AND RIGHT SIDE UP.

DRAWING NO. 49
REV NO. 1

Global Detailing, Inc.

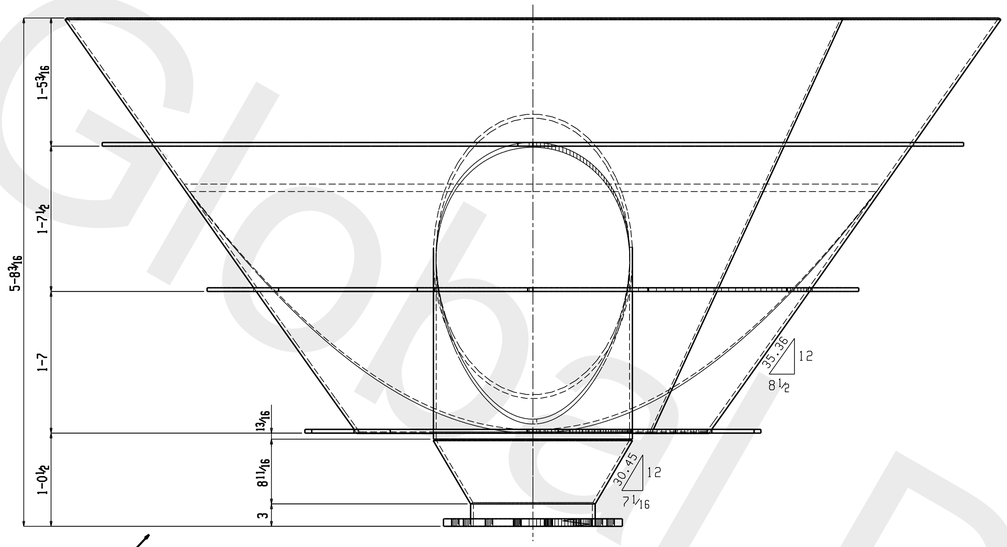

NOTE:
WORK WITH SHEET 62
FOR SECTIONS FOR FRAME

BILL OF MATERIAL

LINE #	QTY TOTAL	PC MARK	DESCRIPTION	LENGTH		REMARKS	WEIGHT TOTAL	ADVANCE MILL #	SEQUENCE
	ONE	61F1	FRAME				9136		1
	1	61F1	RB1 1/2	8	10 1/2	A36	53		
	2	hss5	PIPE 26x3/8	3	7 5/8	A53	6		
	2	hss4	PIPE 16x3/8	0	2	A53	0		
	2	p198	PL1x24			A36	257		
	1	p194	PL 1/2x88	9	8	A36	1447		
	1	p178	PL 1/2x62	9	8	A36	1020		
	2	p206	PL 1/2x58	9	8	A36	1908		
	2	p182	PL 1/2x47 1/4	8	8 13/16	A36	1405		
	2	p195	PL 3/8x67 15/16	16	5 15/16	ROLLED A36	2861		
	2	p201	PL 3/8x10	7	0 1/16	ROLLED A36	179		

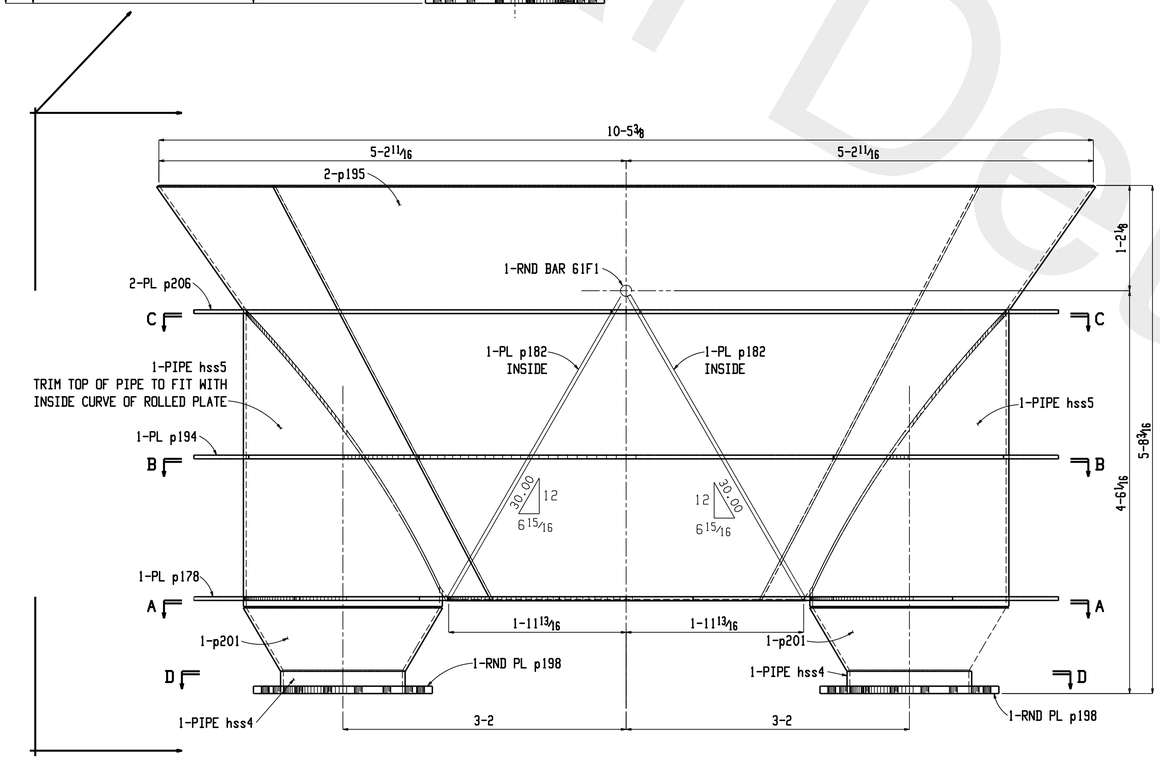

ONE FRAME 61F1

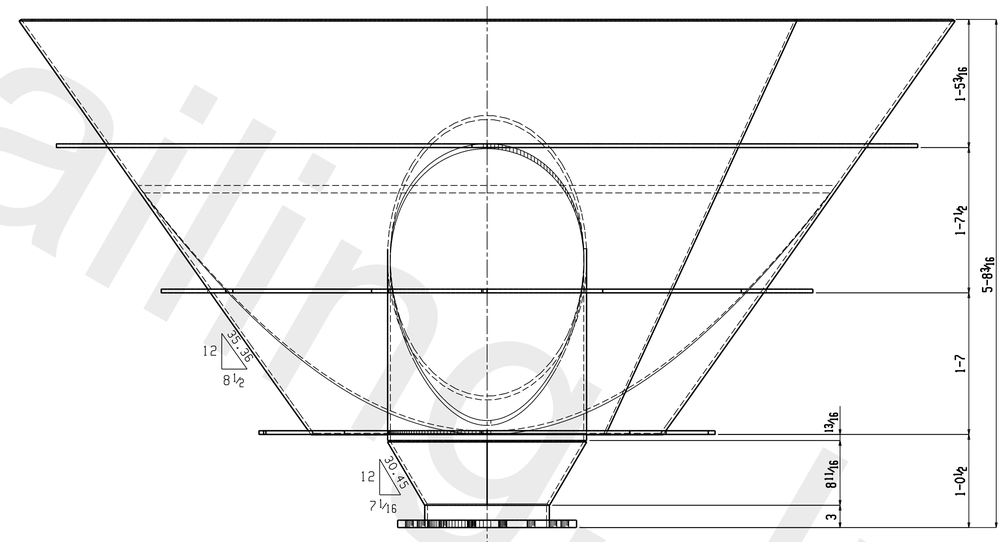

PAINT NOTE:

1ST COAT: SHERWIN WILLIAMS MACROPOXY 646 HS AT 5.0 MILS DRY FILM THICKNESS

2ND COAT: SHERWIN WILLIAMS MACROPOXY 646 HS AT 5.0 MILS DRY FILM THICKNESS

3RD COAT: SHERWIN WILLIAMS COROTHANE II AT 2.0 MILS DRY FILM THICKNESS

DRAWINGS PREPARED BY,
GLOBAL DETAILING, INC.
JOB # 11-387

REV	DATE	BY	DESCRIPTION
1	Dec 9 2011	TC	FABRICATION
0	Nov 29 2011	TC	FOR APPROVAL

DESCRIPTION: FABRICATION DETAILS
REF. DWG.: -
CUSTOMER: ROBERTS & SCHAEFER COMPANY

Specialty Construction & Maintenance Service
CONSTRUCT INCORPORATED
1514 Cargill Ave.
Wilson, NC 27893
PHONE - (252) 246-0639
FAX - (252) 246-1616

JOB NO. 8214-FS
JOB TITLE: SGS UNIT 46 - ASH STORAGE SILO
DRAWING NO. 61
HOLES 13/16 DIA. EXC. NOTED U.N.O.
LOCATION: PALATKA, FL
CLEAN SPEC SSPC-SP6
ARCH. OR ENGR ROBERTS & SCHAEFER COMPANY
REV NO. 1
FINISH SEE NOTE
DRAWN TC DATE 11-28-11 CHKD GD DATE 12-2011
DRY FIL. THICKNESS SEE NOTE
ELECTRODE CLASS E70XX
STRUCTURE UNSTABLE UNTIL ERECTION IS COMPLETE. ERECTOR TO GUY AS REQUIRED.
PAINT PIECE MARK TO REAR RIGHT SIDE UP ON LEFT END OF PIECE. ERECT WITH MARK AT SAME END AS SHOWN ON ERECTION PLAN AND RIGHT SIDE UP.

Global Detailing, Inc.

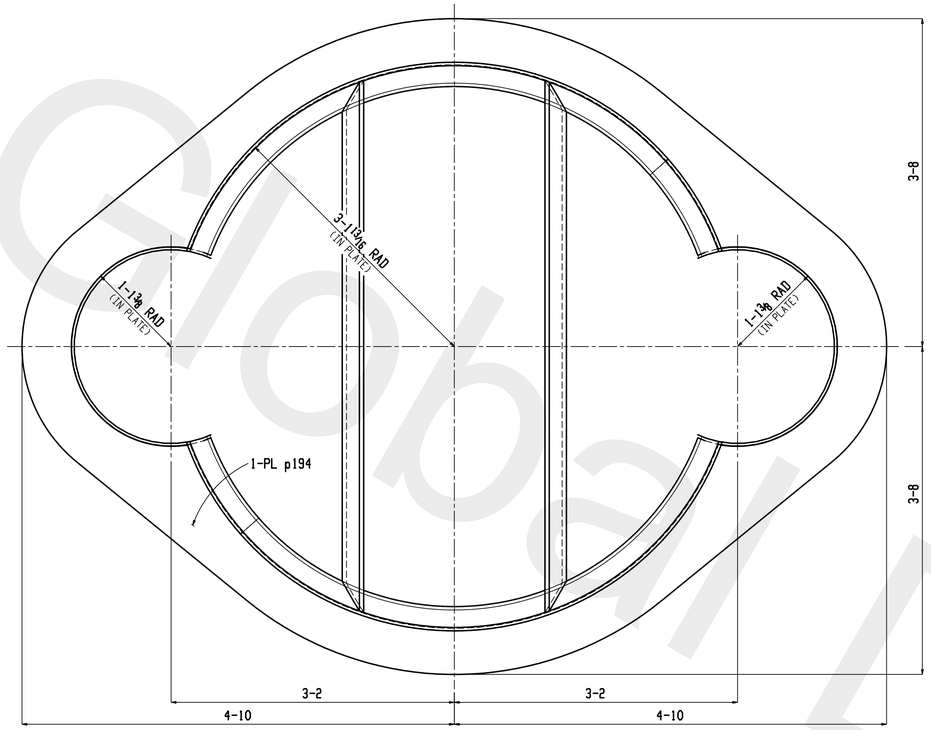

Section B-B
61F1

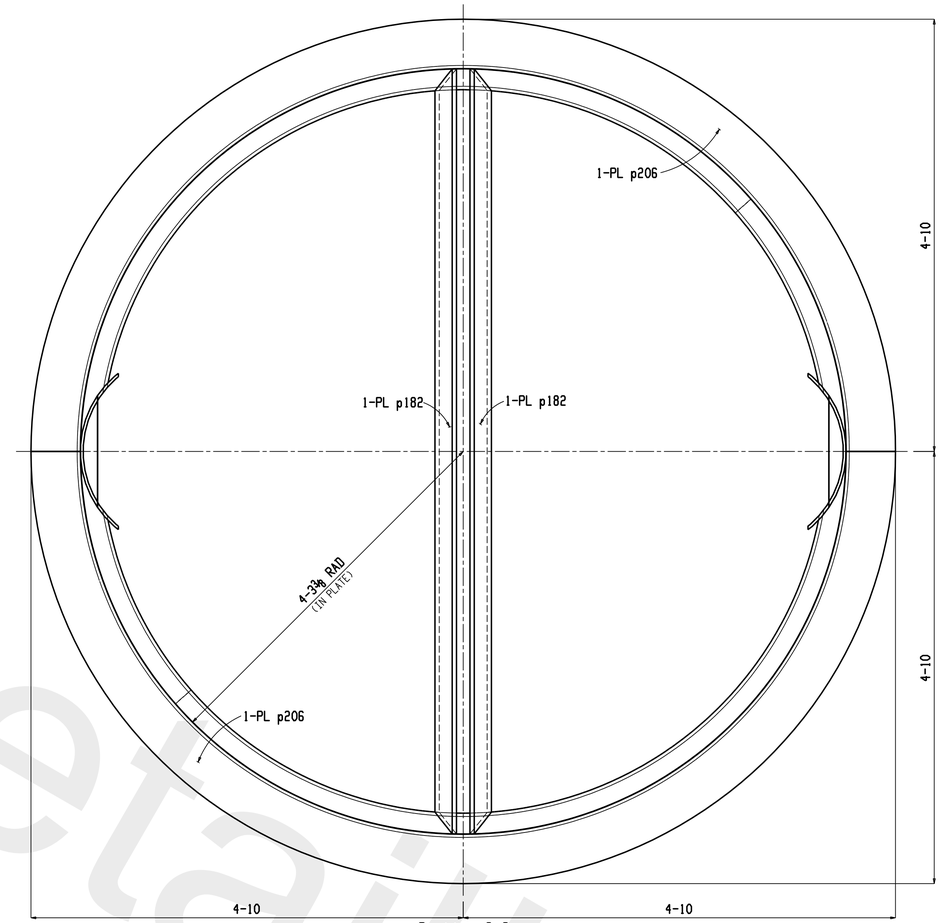

Section C-C
61F1

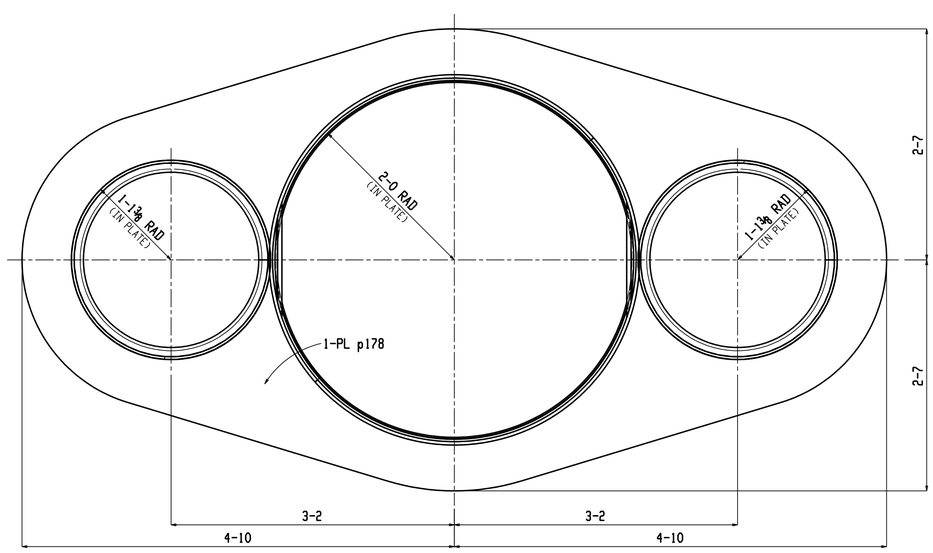

Section A-A
61F1

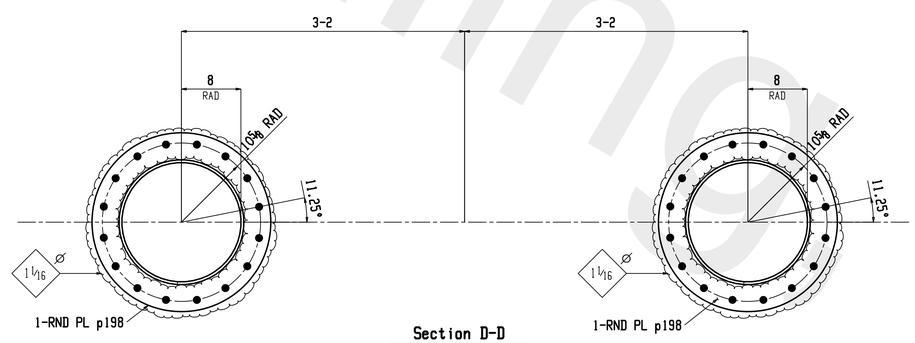

Section D-D
61F1

PAINT NOTE:

1ST COAT: SHERWIN WILLIAMS MACROPOXY 646 HS
AT 5.0 MILS DRY FILM THICKNESS

2ND COAT: SHERWIN WILLIAMS MACROPOXY 646 HS
AT 5.0 MILS DRY FILM THICKNESS

3RD COAT: SHERWIN WILLIAMS COROTHANE II
AT 2.0 MILS DRY FILM THICKNESS

DRAWINGS PREPARED BY,
GLOBAL DETAILING, INC.
JOB # 11-387

REV	DATE	BY	DESCRIPTION
1	Dec 9 2011	TC	FABRICATION
0	Nov 29 2011	TC	FOR APPROVAL

DESCRIPTION: FABRICATION DETAILS
REF. DWG.: -
CUSTOMER: ROBERTS & SCHAEFER COMPANY

Specialty Construction & Maintenance Service
CONSTRUCT INCORPORATED
1514 Cargill Ave.
Wilson, NC 27893
PHONE - (252) 246-0639
FAX - (252) 246-1616

JOB NO. 8214-FS
JOB TITLE: SGS UNIT 46 - ASH STORAGE SILO
DRAWING NO. 62
HOLES 13/16 DIA. EXC. NOTED U.N.O.
LOCATION: PALATKA, FL
CLEAN SPEC SSPC-SP6
ANCHL OR EXCR ROBERTS & SCHAEFER COMPANY
REV NO. 1
FINISH SEE NOTE
DRAWN TC DATE 11-28-11 CHKD GD DATE 12-2011
DRY FILM THICKNESS SEE NOTE
ELECTRODE CLASS E70XX
STRUCTURE UNSTABLE UNTIL ERECTION IS COMPLETE. ERECTOR TO GUY AS REQUIRED.
PAINT PIECE MARK TO READ RIGHT SIDE UP ON LEFT END OF PIECE. ERECT WITH MARK AT SAME END AS SHOWN ON ERECTION PLAN AND RIGHT SIDE UP.

Global Detailing Inc.

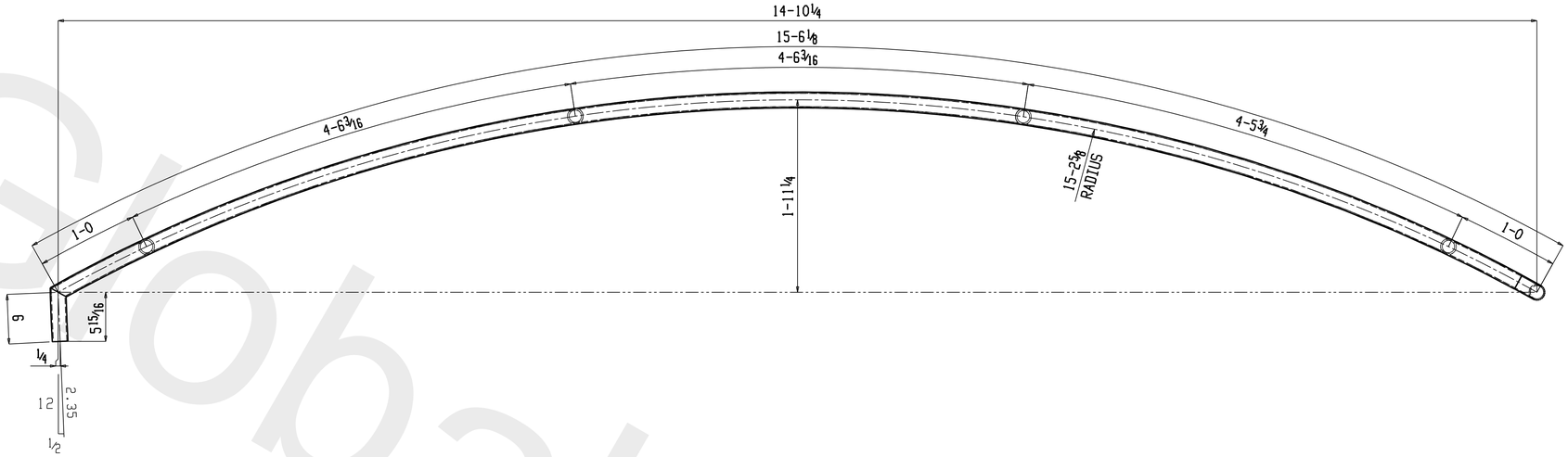

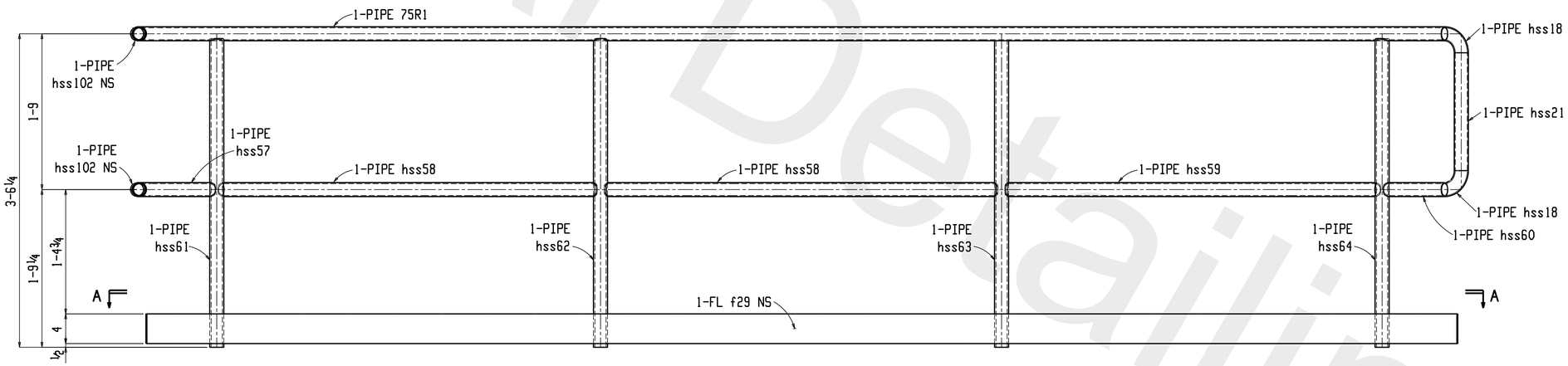

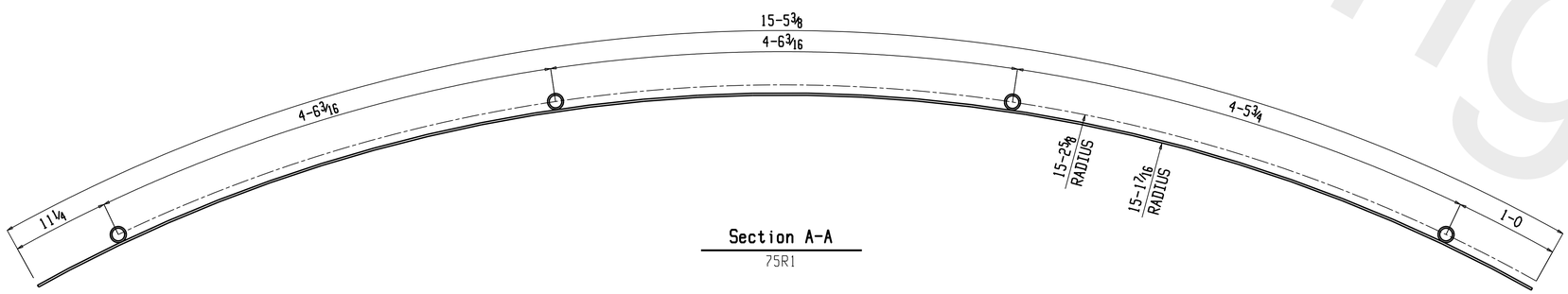

Section A-A

75R1

ONE RAIL 75R1

BILL OF MATERIAL

LINE #	QTY TOTAL	PC MARK	DESCRIPTION	LENGTH		REMARKS	WEIGHT TOTAL	ADVANCE MILL #	SEQUENCE
	ONE	75R1	RAIL				203		1
	1	75R1	PIPE 1 1/2 STD	15	5 1/8	A53	42		
	1	hss61	PIPE 1 1/2 XSTG	3	5 5/8	A53	13		
	1	hss62	PIPE 1 1/2 XSTG	3	5 5/8	A53	13		
	1	hss64	PIPE 1 1/2 XSTG	3	5 5/8	A53	13		
	1	hss63	PIPE 1 1/2 XSTG	3	5 5/16	A53	13		
	2	hss58	PIPE 1 1/2 STD	4	5 3/16	A53	26		
	1	hss59	PIPE 1 1/2 STD	4	4 3/4	A53	12		
	1	hss21	PIPE 1 1/2 STD	1	3 7/8	A53	4		
	1	hss57	PIPE 1 1/2 STD	1	0	A53	3		
	1	hss60	PIPE 1 1/2 STD	0	8 7/8	A53	3		
	2	hss102	PIPE 1 1/2 STD	0	6 9/16	A53	4		
	2	hss18	PIPE 1 1/2 STD	0	5 1/2	A53	4		
	1	f29	FL 1/4x4	15	4 9/16	A36	53		

PAINT NOTE:

1ST COAT: SHERWIN WILLIAMS MACROPOXY 646 HS
AT 5.0 MILS DRY FILM THICKNESS

2ND COAT: SHERWIN WILLIAMS MACROPOXY 646 HS
AT 5.0 MILS DRY FILM THICKNESS

3RD COAT: SHERWIN WILLIAMS COROTHANE II
AT 2.0 MILS DRY FILM THICKNESS

DESCRIPTION: FABRICATION DETAILS

REF. DWG.: -

CUSTOMER: ROBERTS & SCHAEFER COMPANY

Specialty Construction & Maintenance Service
CONSTRUCT INCORPORATED
1514 Cargill Ave.
Wilson, NC 27893
PHONE - (252) 246-0639
FAX - (252) 246-1616

JOB NO. 8214-FS	JOB TITLE: SGS UNIT 2 - ASH STORAGE SILO		DRAWING NO. 75
HOLES 13/16 DIA. EXC. NOTED U.N.O.	LOCATION: PALATKA, FL		REV NO. 0
CLEAN SPEC SSPC-SP6	ARCH. OR ENGR ROBERTS & SCHAEFER COMPANY		
FINISH SEE NOTE	DRAWN TC	DATE 12-12-11	CHKD GD DATE 12-2011
DRY FIL. THICKNESS SEE NOTE	STRUCTURE UNSTABLE UNTIL ERECTION IS COMPLETE. ERECTOR TO GUY AS REQUIRED.	PAINT PIECE MARK TO REAR RIGHT SIDE UP ON LEFT END OF PIECE. ERECT WITH MARK AT SAME END AS SHOWN ON ERECTION PLAN AND RIGHT SIDE UP.	
ELECTRODE CLASS E70XX			

DRAWINGS PREPARED BY, GLOBAL DETAILING, INC.
JOB # 11-387

REV	DATE	BY	DESCRIPTION
0	Dec 12 2011	TC	FABRICATION

Global Detailing, Inc.